W. D. WRIGHT.

FENDER OPERATING MECHANISM.

APPLICATION FILED DEC. 8, 1906.

1,068,475. Patented July 29, 1913.

2 SHEETS—SHEET 1.

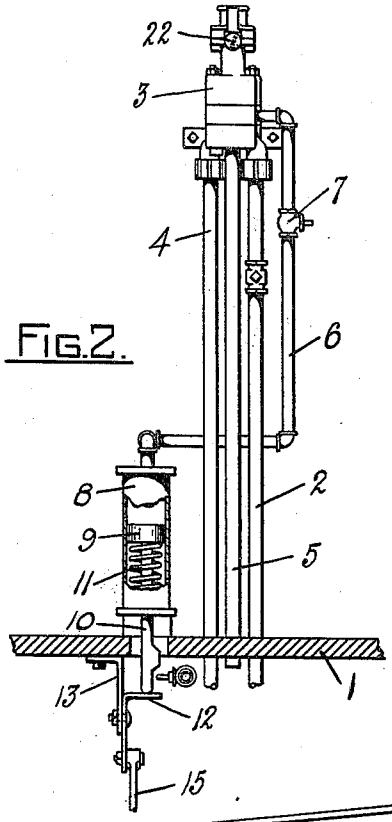

FIG. 2.

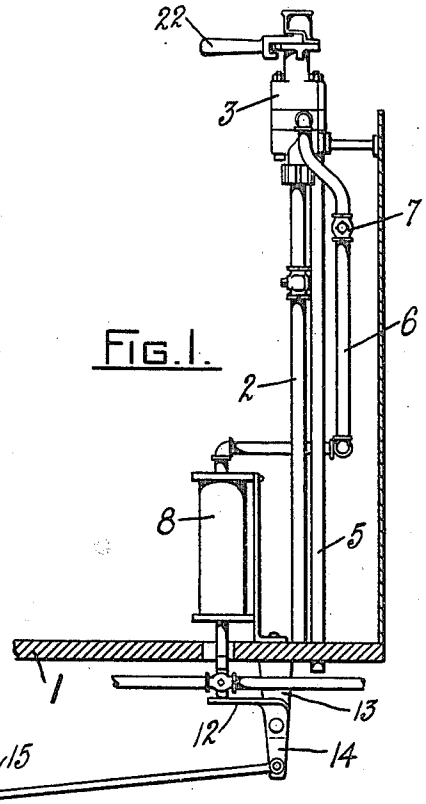

FIG. 1.

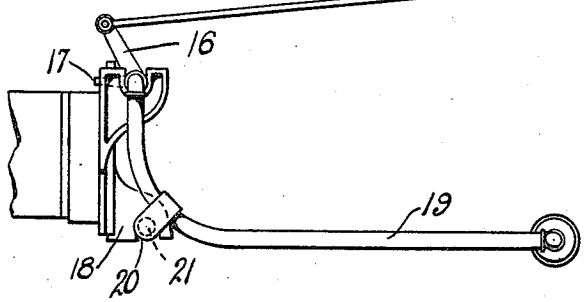

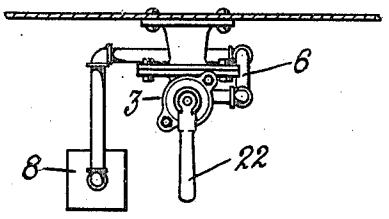

FIG. 3.

WITNESSES.

James H. Thurston

Catherine G. Bradley.

INVENTOR.

William D. Wright,

BY Wilmarth H. Thurston,

ATTORNEY.

W. D. WRIGHT.

FENDER OPERATING MECHANISM.

APPLICATION FILED DEC. 8, 1906.

1,068,475. Patented July 29, 1913.

2 SHEETS—SHEET 2.

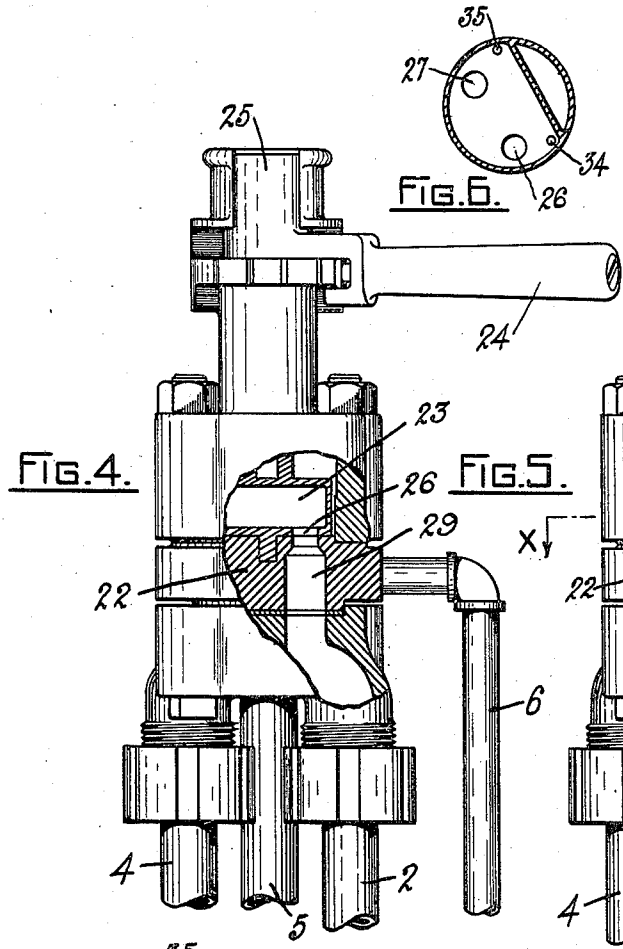

FIG. 4.

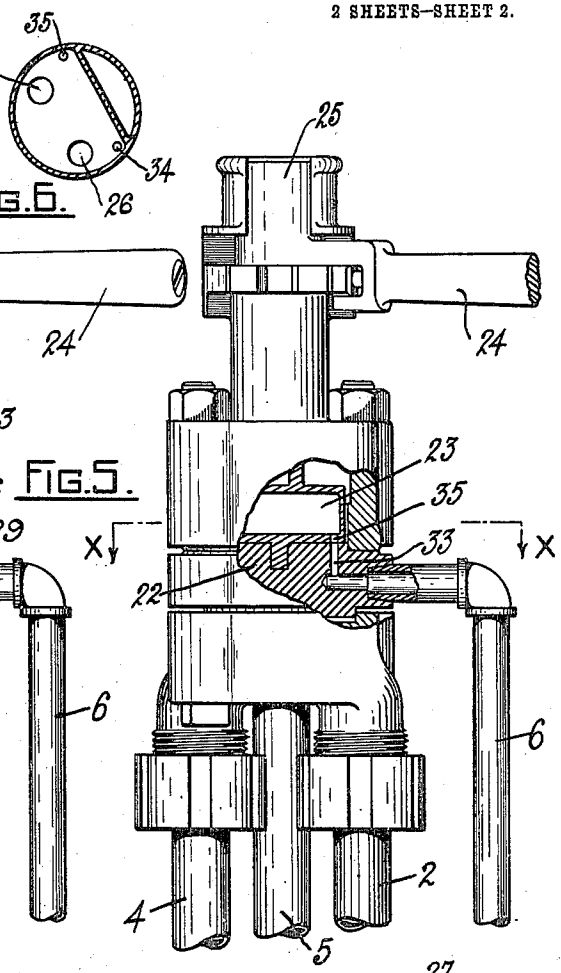

FIG. 5.

FIG. 6.

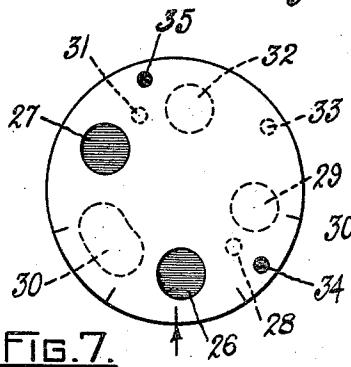

FIG. 7.

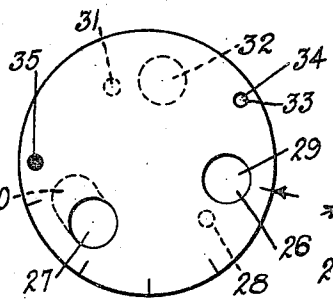

FIG. 8.

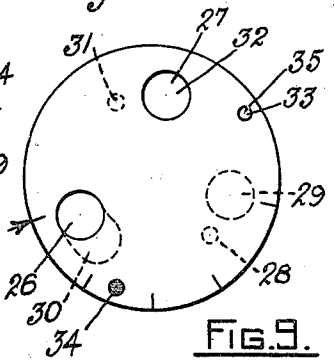

FIG. 9.

WITNESSES.

James H. Thurston

Catherine G. Bradley.

INVENTOR.

William D. Wright,

BY Wilmarth H. Thurston,

ATTORNEY.

UNITED STATES PATENT OFFICE.

WILLIAM D. WRIGHT, OF PROVIDENCE, RHODE ISLAND.

FENDER-OPERATING MECHANISM.

1,068,475. Specification of Letters Patent. Patented July 29, 1913.

Application filed December 8, 1906. Serial No. 346,830.

To all whom it may concern:

Be it known that I, WILLIAM D. WRIGHT, of the city and county of Providence and State of Rhode Island, have invented certain new and useful Improvements in Fender-Operating Mechanism; and I hereby declare the following specification, taken in connection with the accompanying drawings, forming a part of the same, to be a full, clear, and exact description thereof.

The invention relates to that class of railway-cars which are equipped with fenders and with air-brakes.

The object of the invention is to insure that the fender shall be released or otherwise operated whenever there is an emergency application of the air-brakes, and without any separate or independent manipulation by the engineer or motorman. In another application, Serial No. 346,829, filed December 8, 1906, I have shown and described two arrangements for accomplishing this result, one arrangement being adapted for use in connection with an air-brake controlling valve (commonly known as the engineer's valve) such as heretofore employed, and the other arrangement involving the employment of a controlling valve of somewhat different construction, and have included in said application claims to cover generically both of said arrangements.

The present application relates to features of invention embodied in the second arrangement referred to.

One feature of invention consists in the construction of an air-brake controlling valve to adapt it to the purpose of operating the fender when moved to its emergency position.

A further feature of invention consists in the combination, with such air-brake controlling valve and with the fender, of mechanism for operating the fender, and pipe connections between said controlling valve and said fender-operating mechanism whereby the fender will be operated by the movement of said controlling valve.

A further feature of invention consists in the combination, with such air-brake controlling valve and with the fender, of means whereby the fender-operating mechanism will be actuated by fluid pressure from the air-brake system when said controlling valve is moved to its emergency position.

The invention further consists in the combinations and arrangements of parts hereinafter described and claimed.

Referring to the drawings, Figure 1 is a side elevation of a portion of the platform of a railway car showing the controlling valve of the air-brake system and the piping therefor with the present invention applied thereto, and showing also a portion of one of the trucks with the fender supported thereon. Fig. 2 is a front elevation of the apparatus shown in Fig. 1 with the connecting rod leading to the fender broken away. Fig. 3 is a plan view of the same. Fig. 4 is a front elevation partly in section on an enlarged scale showing the construction of the air-brake controlling valve and showing the inlet port of the rotary member when in emergency position. Fig. 5 is a corresponding view but with the portion in section taken in a different plane to show the outlet ports for controlling the operation of the fender. Fig. 6 is a section through the rotary member of the controlling valve taken on the line x—x of Fig. 5. Figs. 7, 8 and 9 are diagrammatic views on a still larger scale showing the different positions of the controlling valve.

1 represents the platform of a railway-car, which it will be understood is provided with a system of air-brakes.

2 is the pipe leading from the reservoir of the air-brake system.

3 represents as a whole the air-brake controlling valve.

4 is the train-pipe or pipes leading to the brake-cylinders or cylinders, and 5 is the exhaust pipe. Leading from the train-pipe 4 is a pipe 6 which is provided with a valve 7. The pipe 6 leads to a cylinder 8 within which is a piston 9 having a piston-rod 10 which projects through the lower end of said cylinder. A spring 11 is arranged within the cylinder below the piston with one end bearing against the piston and the other end bearing against the bottom of the cylinder, said spring acting to normally keep the piston 9 in its upper position, as shown in Fig. 2. The lower end of the piston-rod 10 normally engages one arm of a bell-crank lever 12 which is pivoted to a

bracket 13 secured to the car-platform. To the other arm 14 of said bell-crank lever is connected a rod 15, the other end of which rod is connected to one arm 16 of a bell-crank lever which is shown as pivoted on the frame of the fender. The other arm 17 of this bell-crank lever is arranged to engage the upper end of the sliding latch-block 18 which serves to normally latch the fender 19 in its raised position, as shown in Fig. 1, said block 18 being provided with a notch 20 with which a projecting pin 21 engages and by means of which engagement the fender is held in its latched position.

The air-brake controlling valve 3 is in the main of a construction such as heretofore employed embodying a non-rotary member 22 and a rotary member 23, said rotary member being adapted to be operated by the operating handle 24 provided with a hub 25. These rotary and non-rotary members of the controlling valve are provided with several ports arranged as heretofore, as follows: 26 is the inlet port and 27 the outlet port of the rotary member; 28 is the service port and 29 the emergency port of the non-rotary member, both of which communicate with the reservoir pipe 2; 30 is the port in the non-rotary member which communicates with the train-pipe 4, and 31 is the slow exhaust port and 32 the full exhaust port in the non-rotary member, both of which ports communicate with the exhaust pipe 5. In addition to the ports above referred to the non-rotary member is provided with a port 33 with which the pipe 6 communicates, as shown in Fig. 5, and the rotary member is provided with two ports 34 and 35 adapted to be brought into alinement with the port 33, the port 34 being brought into alinement with said port 33 when the rotary member is moved to its emergency position, and the port 35 being brought into alinement with said port 33 when the rotary member is moved to its full exhaust position, the additional ports referred to being provided for use in connection with the operation of the fender, as hereinafter described.

The operation of the arrangement above described is as follows: Fig. 7 represents the rotary member of the controlling valve in what is known as lap position with all the ports closed. Whenever the rotary member is moved from the position shown in Fig. 7 to the position shown in Fig. 8, which is the emergency position of the controlling valve, the port 34 in the rotary member will be brought into alinement with the port 33 in the non-rotary member, as shown in Figs. 5 and 8. With the parts in this position, therefore, the air under pressure which is admitted to the interior of the rotary member by the bringing of the port 26 into alinement with the port 29 will flow through the ports 34 and 33 into the pipe 6 and thence into the cylinder 8, where it will act upon the piston in said cylinder to move the same and its piston-rod downward. The downward movement thereby imparted to the piston-rod 10 will depress the arm 10 of the bell-crank lever, which movement of said lever will, through the connecting rod 15 and bell-crank lever 16, 17, serve to raise the latch 18 and so as to release the fender 19 and permit the forward end thereof to drop down into contact with the rails or with the road-bed between the rails. When now the rotary member is moved from the position shown in Fig. 8 to the position shown in Fig. 9, which is the full exhaust position of said member, the port 35 will be brought into alinement with the port 33 and thereby communication will be established from the pipe 6 through the non-rotary and rotary members to the exhaust pipe 5, and so as to exhaust the cylinder 8 through said pipe 5. When the cylinder 8 is thus exhausted the piston-rod 10 will be raised by the spring 11 and so that the fender may be then again latched in its raised position.

It may be sometimes desirable, as when the car has been stopped upon an incline, to exhaust the cylinder 8 and reset the fender without releasing the air-brakes. For this purpose the valve 7 in the pipe 6 may be employed, said valve being provided with a port opening to the atmosphere, which port is normally closed by the valve which may be held to its seat by a spring. When it is desired to thus exhaust the cylinder 8 without releasing the brakes the controlling valve is moved to lap position, as shown in Fig. 7, in which all the ports are closed and which movement of the valve will not operate to release the brake. With the controlling valve thus moved to lap position the motorman or engineer may, by pressing upon the projecting valve-stem, move the valve 7 away from its seat and so as to open the port to the atmosphere and thereby exhaust the cylinder 8.

What I claim as my invention and desire to secure by Letters Patent is:

1. The combination of an air-brake controlling valve, a fender, mechanism for operating said fender by the fluid pressure of the air-brake system, said controlling valve being constructed to admit said fluid pressure to actuate said mechanism, and means for exhausting said fluid pressure from the fender-operating mechanism without releasing the brakes.

2. The combination of an air-brake controlling valve, a fender, mechanism for operating said fender by the fluid pressure of the air-brake system, said controlling valve being constructed to admit said fluid pressure to actuate said mechanism, and means independent of said controlling valve for exhausting said fluid pressure from the

fender-operating mechanism without releasing the brakes.

3. The combination of an air-brake controlling valve, a fender, a cylinder and piston for operating said fender, a pipe connection between said controlling valve and said cylinder for admitting the fluid pressure of the air-brake system to said cylinder to operate the fender, and means for exhausting said fluid pressure from said cylinder without releasing the brakes.

WILLIAM D. WRIGHT.

Witnesses:
W. H. THURSTON,
J. H. THURSTON.

Copies of this patent may be obtained for five cents each, by addressing the "Commissioner of Patents. Washington, D. C."