United States Patent

[11] 3,541,912

[72] Inventor **John C. Radke**
Seattle, Washington (10228 Main St., Bothell, WA 98011)

[21] Appl. No. **747,350**
[22] Filed **July 24, 1968**
[45] Patented **Nov. 24, 1970**

[54] **MANUAL AND CHORD BUTTON BANK PORTABLE-NECKED BODY FOR AN ELECTRIC ORGAN**
10 Claims, 9 Drawing Figs.

[52] **U.S. Cl.** **84/1.17**
[51] **Int. Cl.** **G10c 3/12, G10h 1/00**
[50] **Field of Search** ..... 84/1.01, 1.04, 1.07, 1.08, 1.11, 1.14, 1.16, 1.17, 1.19, 1.22, 1.24, C, D, E, N

[56] **References Cited**

UNITED STATES PATENTS

2,962,922	12/1960	Cutler et al.	84/1.01
3,001,434	9/1961	Lo Duca	84/1.17X
3,335,629	8/1967	Brodin	84/1
3,359,358	12/1967	Brand et al.	84/1.01

Primary Examiner—Warren E. Ray
Attorney—Robert W. Beach

ABSTRACT: A guitarlike mounting includes a body carrying a manual and a neck projecting from the body and carrying a chord button bank. The manual and the chord button bank include switches closable by depressing keys of the manual and buttons of the bank which are connected to relays for energizing tone generators corresponding to the various keys of the manual and buttons of the bank.

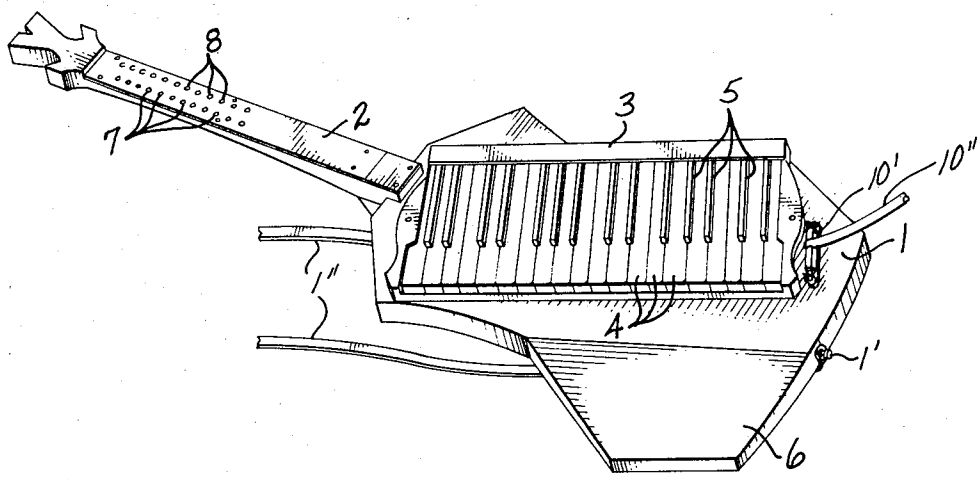

Patented Nov. 24, 1970 3,541,912

Fig. 1.

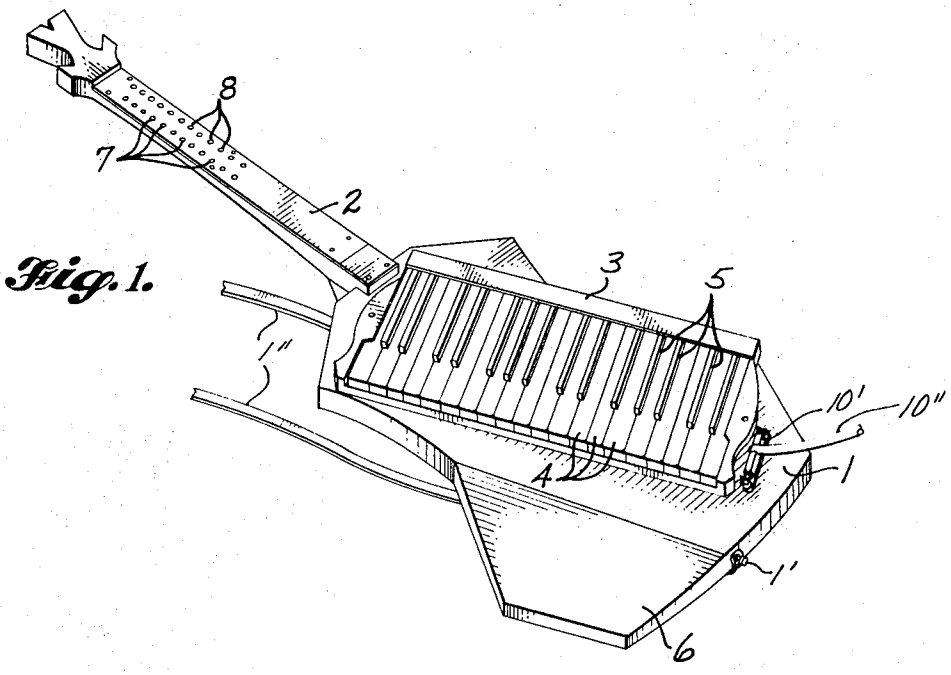

Fig. 2.

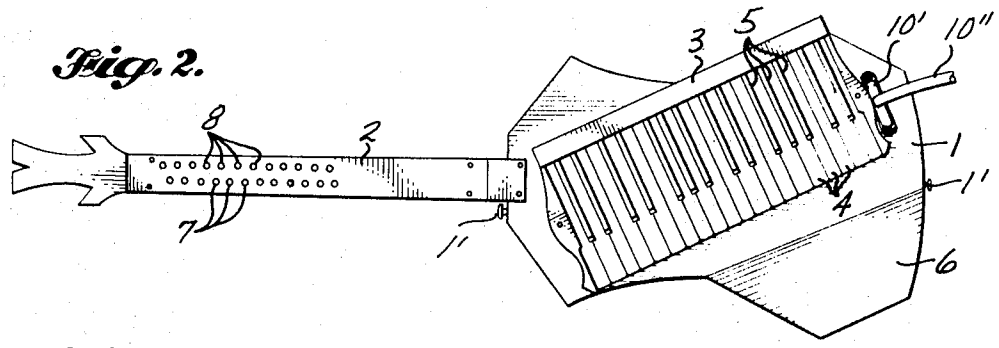

Fig. 3.

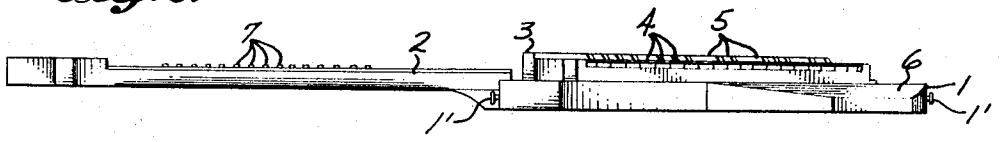

Fig. 4.

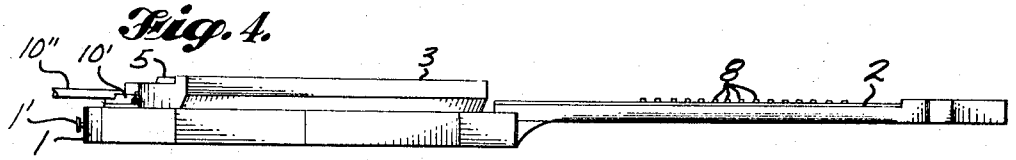

Fig. 5.

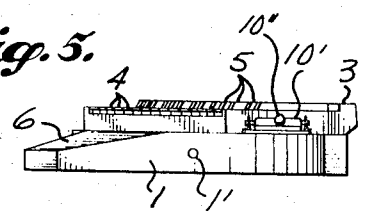

INVENTOR.
JOHN C. RADKE

BY
Robert W. Beach

ATTORNEY

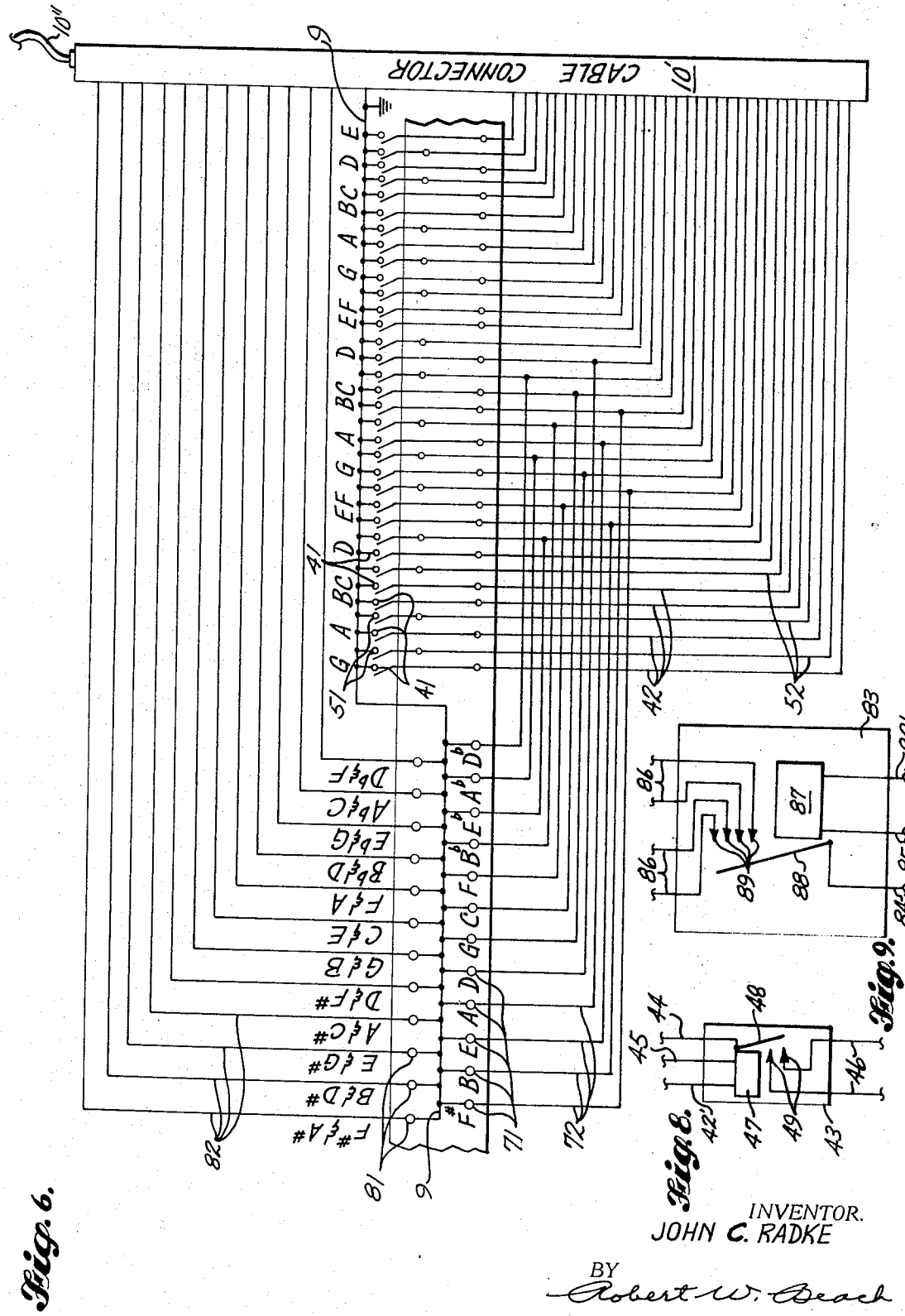

Fig. 6.

Fig. 8.

Fig. 9.

INVENTOR.
JOHN C. RADKE

BY
Robert W. Beach

ATTORNEY

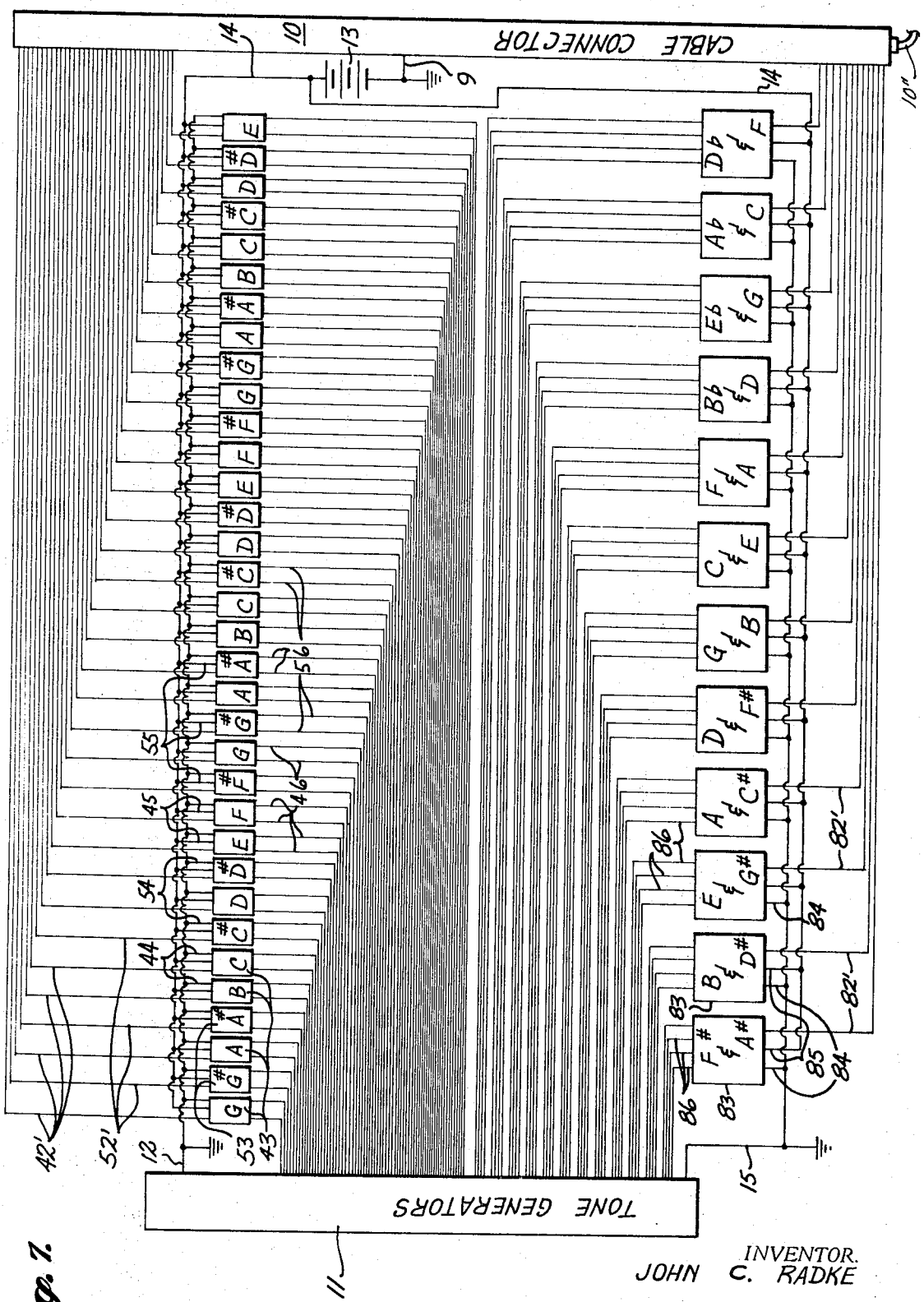

Fig. 7.

INVENTOR.
JOHN C. RADKE

BY
Robert W. Beach

ATTORNEY

MANUAL AND CHORD BUTTON BANK PORTABLE-NECKED BODY FOR AN ELECTRIC ORGAN

A principal object of the present invention is to provide a portable mounting for an electric organ manual and key or chord buttons which can be carried easily and conveniently by a person while standing, or which can be held by a person while seated, instead of being carried directly by an organ console. A more specific object is to provide such a portable mounting which is of guitarlike shape having a manual carried by the body of the mounting and key or chord buttons carried by the neck of the mounting.

Another object is to provide a key and chord button bank including two rows of buttons in staggered relationship, the buttons of one row corresponding to a single note, and the buttons of the other row corresponding to two-note chords with one note of the chord for each button corresponding to the note of an adjacent, single-note button.

An additional object is to provide a manual and a key bank on a portable mounting having switches which are interconnected so that circuits for selected notes can be completed either by pressing a key button or by pressing a key of the manual so that corresponding button and manual key combinations can be connected from the portable mounting to the relay assembly by a single wire.

FIG. 1 is a top perspective of the guitarlike mounting, and FIG. 2 is a plan of such mounting. FIG. 3 is a side elevation of the mounting seen from one side, and FIG. 4 is a side elevation of the mounting seen from the opposite side. FIG. 5 is an end elevation of the mounting.

FIG. 6 is a wiring diagram for the manual and the button bank in the mounting, and

FIG. 7 is a wiring diagram of the control relays for the tone generators.

FIG. 8 is a detail wiring diagram for one relay installation, and

FIG. 9 is a detail wiring diagram for another type of relay installation.

In playing the conventional organ the organist either must sit with his back to the audience, or must sit with the organ console between himself and the audience, or the audience must be to the side of the organist and the console. In any of such cases the audience does not have a satisfactory view of the organist, nor does the organist have a satisfactory view of the audience. The situation is even less satisfactory where the organist is required to coordinate his music with other orchestral instruments or accompany a soloist or chorus or provide music for dancing. In all of these situations it would be much more satisfactory for the organist to be able to face the audience, or an orchestral conductor, or other instruments or an orchestra, or a soloist, a chorus, a choir or a dance ensemble.

In order to enable an organist to face the audience or other performers a guitarlike mounting for the organ controls is provided which includes the body 1 from which the neck 2 projects. Such mounting can be suspended from a shoulder of the organist in the fashion of a guitar by providing headed pins 1' on opposite ends of the body 1 to which the opposite ends of a shoulder strap loop 1'' can be attached, respectively. The organ manual 3 including the white note keys 4 and the black note keys 5 is mounted on the body 1 with its length extending generally lengthwise of the body, but preferably at least somewhat diagonally of the body so that one corner portion of the body 6 is exposed to form a ledge on which the wrist or forearm of the organist can rest while the organist is fingering the keys 4 and 5.

On the neck 2 of the mounting two rows of key buttons 7 and 8 are provided. As shown best in FIG. 2, the buttons of the two rows preferably are arranged in staggered relationship. Such buttons preferably are arranged so that each button 7 will actuate a different single note, and each of the buttons 8 will actuate a two-note chord. Also, as shown in FIG. 6, there is a relationship between the single notes of the key buttons 7 and the chords of the chord buttons 8, as well as between the notes of the single buttons 7 and the keys 4 and 5 of the manual 3.

From an electrical point of view the single common wire 9 is connected to one side of all the switches for the keyboard keys and all of the buttons mounted on the neck 2. A cable connector 10 for the relay assembly is connected to the cable connector 10' for the manual and key button mounting by a multiple wire bundle cable 10''. The connectors 10 and 10' can be connected permanently to the cable 10'', or such connectors can be of the separable pin and socket type if desired.

Each of the white note keys 4 shown in FIGS. 1 and 2 when depressed will close its corresponding switch 41 shown in FIG. 6 to complete a circuit from the common wire through its corresponding cable wire 42 to a wire 42' of the relay assembly shown in FIG. 7. As shown best in FIG. 8 each wire 42' is connected to a relay unit 43. The tone generators 11 are also connected through a wire 12 and the branch wires 44 to each of the relay units, respectively. In addition, the power source 13 is connected by a wire 14 and branch wires 45 to each of the relay units 43. Also each of the relay units includes an output circuit 46 connected to the tone generators 11.

The relay coil 47 of each relay unit 43 is connected to a key-actuated switch wire 42' and a power wire 45 as shown in FIG. 8. Energization of the relay coil by closing of the corresponding key switch 41 will move armature 48 into switch-closing engagement with switch contacts 49 to complete a circuit from the lead 44 of tone generator wire 12 to the two wires 46 which will energize tone generators to produce the same note at two different pitches spaced apart one octave.

Similarly, depression of a black note key 5 will close corresponding switch 51 to connect one of the wires 52 shown in FIG. 6 to the common wire 9. Such wire will be connected through the cable 10'' to the corresponding wire 52' of the relay assembly shown in FIG. 7. The relays 53 are similar to the relays 43 shown in detail in FIG. 8 and have connected to them not only a switch wire 52' but also a wire 54 connected to the common wire 12 from the tone generators 11 and a branch wire 55 connected to the common power supply wire 14. Each of the relay units 53 has two output circuit wires 56 connected to the tone generators 11. The relay structure of the relays 53 is like that for the relays 43 shown in FIG. 8. Consequently, when a black key 5 is depressed the corresponding switch wire 52' will be energized to energize the relay coil for closing a circuit between the branch wire 54 of the tone generator common wire 12 and the output circuit wires 56.

The key buttons 7 do not have relay units corresponding to these respective key buttons, but as shown in FIG. 6 each switch 71 will connect a wire 72 between the common wire 9 and a selected one of the switch wires 42 and 52 shown in FIG, 6. According to the labels on the switches of FIG. 6 the key buttons 7 correspond to notes spaced apart five half tones. If the pitch of the notes is disregarded, in some instances one note will be higher or lower than the note on either side of it, but in each instance the shortest interval between the two notes is five half tones.

Each of the key buttons 7 is located adjacent to a key button 8, actuation of which will produce a two-note chord, one note of which is the same as such adjacent key 7. The other adjacent chord key 8 will actuate the other two notes of a tonic chord including such adjacent key 7. To illustrate, the key button 7 for the note G is, as shown in FIG. 6, adjacent to the key button 8 which will produce the two-note chord G and B. Also the key button 7 for the note G is adjacent to the key button 8 for the two-note chord C and E, so that the three notes C, E and G will produce the tonic chord for the scale of C. In order to maintain this relationship the notes of the chords controlled by each key button 8 are spaced apart two whole tones.

The switches 81 of the respective key buttons 8 will connect the common wire 9 to the respective switch wires 82 shown in FIG. 6, which are connected through the wire bundle cable 10'' to the respective wires 82' shown in FIG. 7. Each of these wires is connected to a separate relay 83, one of which is illustrated in detail in FIG. 9. Also connected to such relay is a branch wire 84 connected to the common wire 15 of the tone generators 11. Each relay 83 is further connected to the com-

mon power wire **14** by a branch wire **85**. Four output circuit wires **86** lead from each relay **83** to the tone generators **11**. Two of these wires will correspond to one of the notes of the particular chord at different pitches one octave apart, and the other two wires will correspond to the other note of the chord having two different pitches spaced apart an octave.

As shown in FIG. **9** a switch wire **82'** and a power branch wire **85** are connected to the relay coil **87** so that it will be energized when the key button **8** corresponding to that particular chord is depressed. Upon such energization of the relay coil the armature **88** will be swung into contact with the terminals **89** of the corresponding tone generator connections **86** so as to complete a circuit from each of these wires to the common tone generator wire **15** through the branch wire **84**.

The tone generators **11** will be those conventionally used for electric organs, and they will be connected to suitable amplifiers which in turn will be connected to a loudspeaker or loudspeakers in the customary manner. Also stops may be provided on the organ console to produce the usual variation of instrumental effects, or some or all of such stops could be mounted on the manual and key button mounting if desired. Moreover, the power source **13** can be the power source for the organ.

It will be seen from FIG. **6** that when the chord of any selected chord button **8** is considered to be the tonic chord, the chord button **8** at one side of such selected button will control the dominant chord, and the chord button **8** at the other side of such selected button will control the subdominant chord. Also, as has been mentioned, in each instance a key button **7** adjacent to each chord button **8** will supply the third note or upper note of a major chord. Consequently, the speed and versatility of playing is enhanced by the arrangement of chord and single-note buttons **8** and **7** provided on the neck **2**. It will be evident that manipulation of these buttons by the left hand can be coordinated with fingering of the standard manual **3** by the right hand.

I claim:

1. A guitarlike mounting for electric organ playing means to operate electric organ actuating means, comprising a body carrying a manual, a neck projecting from said body and carrying a key button bank, control means carried by said mounting and actuated by the keys of said manual and by the key buttons of said bank, and means operatively connecting said control means and the electric organ actuating means.

2. The mounting defined in claim **1**, in which the manual extends somewhat diagonally of the body to provide a ledge in front of the manual forming an arm rest.

3. The mounting defined in claim **1**, in which the control means includes switch means actuated by the keys of the manual and by the key buttons of the bank.

4. The mounting defined in claim **3**, in which the switch means includes switches corresponding to some of the key buttons of the key button bank which are connected in parallel with some switches of the switch means corresponding to selected keys of the manual.

5. The mounting defined in claim **1**, in which the key button bank includes keys arranged in two substantially parallel rows extending lengthwise of the length of the neck, the buttons in one row being arranged in staggered relationship relative to the buttons of the other row.

6. The mounting defined in claim **1**, in which the control means includes switches connected for operation by key buttons arranged in a row to energize the electric organ actuating means for playing one note by depression of one key button in such row.

7. The mounting defined in claim **1**, in which the control means includes switches connected for operation by key buttons for energizing the electric organ actuating means for playing a chord by depression of one key button.

8. The mounting defined in claim **7**, in which key buttons of the key button bank for playing chords are arranged in a row.

9. The mounting defined in claim **8**, in which the key button bank includes buttons in a second row adjacent to the row of chord buttons which second row buttons are operatively connected to the electric organ actuating means so that depression of a key in the second row will play a note in harmony with a chord played by depression of an adjacent button in the chord button row.

10. The mounting defined in claim **1**, the electric organ actuating means being located remote from the mounting, and the means operatively connecting the control means and the electric organ actuating means includes a multiple wire cable connected to the mounting.