C. McNEIL.

THROAT PLATE FOR SEWING MACHINES.

APPLICATION FILED JULY 20, 1915.

1,266,838.

Patented May 21, 1918.

Fig. 3.

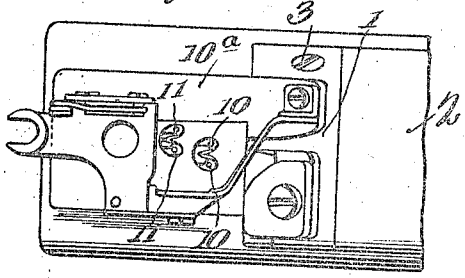


Fig. 2.

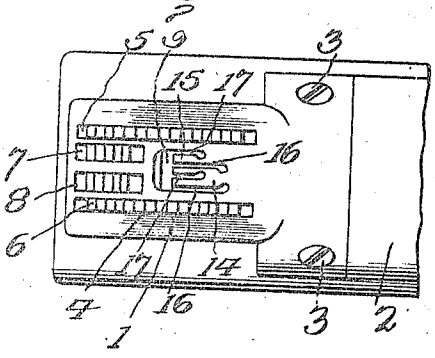


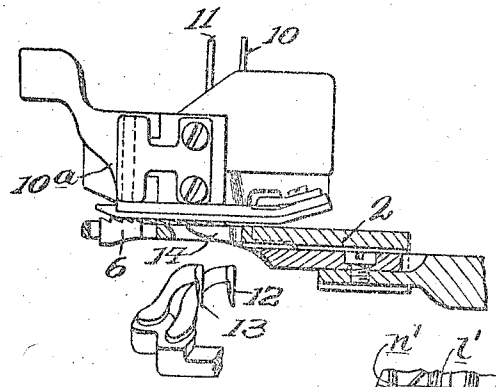


Fig. 4.

Fig. 1.

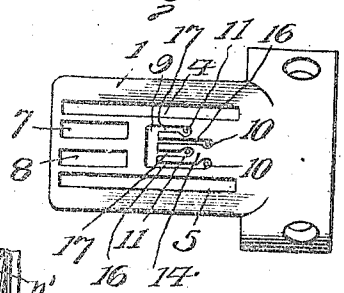


Fig. 7.

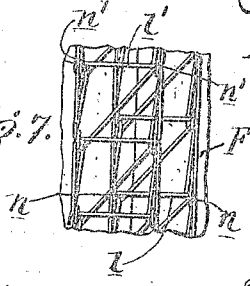


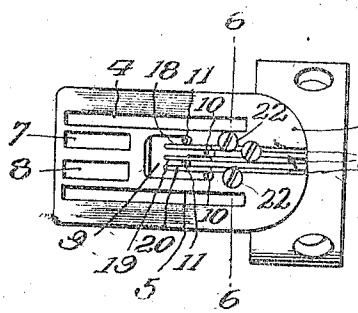


Fig. 5.

Fig. 6.

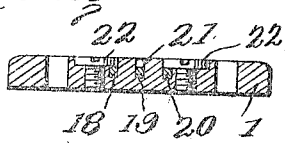


Inventor

Witnesses

Chester McNeil

By Sturtevant Mason

Attorneys

# UNITED STATES PATENT OFFICE.

CHESTER McNEIL, OF CHICAGO, ILLINOIS, ASSIGNOR TO UNION SPECIAL MACHINE COMPANY, OF CHICAGO, ILLINOIS, A CORPORATION OF ILLINOIS.

## THROAT-PLATE FOR SEWING-MACHINES.

1,266,838. Specification of Letters Patent. Patented May 21, 1918.

Application filed July 20, 1915. Serial No. 40,886.

*To all whom it may concern:*

Be it known that I, CHESTER McNEIL, a citizen of the United States, residing at Chicago, in the county of Cook, State of Illinois, have invented certain new and useful Improvements in Throat-Plates for Sewing-Machines, of which the following is a description, reference being had to the accompanying drawing and to the figures of reference marked thereon.

The invention relates to new and useful improvements in throat plates for sewing machines, and more particularly to a throat plate adapted to be used in connection with a stitching mechanism for forming a flat seam.

An object of the invention is to provide a throat plate having an opening in which the needles of stitch-forming mechanisms located one in advance of the other, operate with stitch tongues which project into said opening and across which the cross threads of the stitching mechanisms are laid respectively, the free ends of said stitch tongues terminating in substantially the same line, whereby the cross threads of the front stitching mechanism will be supported until the cross threads of the rear stitching mechanism are laid.

In the drawings,

Figure 1 is a plan view of a throat plate embodying my improvements;

Fig. 2 is a plan view of the end of a work-supporting arm having my improved throat plate thereon, and also showing the feed dog coöperating with the throat plate;

Fig. 3 is a plan view showing the work-supporting arm and a presser foot which coöperates with the throat plate;

Fig. 4 is a view partly in vertical section and partly in side elevation, showing the throat plate, the feed dog, the presser foot and the needles which coöperate therewith;

Fig. 5 is a plan view showing a slightly modified form of a throat plate;

Fig. 6 is a sectional view on the line 6—6 of Fig. 5.

Fig. 7 is a detail showing more or less diagrammatically in bottom plan view a seam stitched on my improved throat plate.

I have shown my improved throat plate 1 as secured to the free end of a cylindrical work support 2. The throat plate is secured thereto by suitable screws 3, 3. Said throat plate is formed with parallel openings 4 and 5, which are spaced from each other and receive the outer webs of the feed dog 6. The throat plate is also provided with openings 7 and 8, which receive other webs of the feed dog. The throat plate is further provided with an opening 9, adapted to receive the needles 10, 10 and 11, 11.

A looper 12 coöperates with the needles 10, 10, beneath the work support, and suitable cross thread-laying mechanism (not shown) coöperates with these needles above the work support. This forms one of the stitching mechanisms for which the throat plate is especially adapted. A looper 13 coöperates with the needles 11, 11 and suitable cross thread-laying mechanism (not shown) coöperates with these needles above the work support and forms the other stitching mechanism, for which the throat plate is especially adapted. It will be noted that these stitch-forming mechanisms which are independent of each other, are located one in rear of the other.

The needles 11, 11, are, however, staggered relative to the needles 10, 10, so that one needle of each pair is in a line passing centrally between the needles of the other pair and parallel with the line of feed.

The presser foot $10^a$ engages the throat plate and has suitable openings for the needles 10—10 and also the needles 11—11, as clearly shown in Fig. 3.

The throat plate is formed with a stitch tongue 14, which extends rearwardly between the needles 10, 10, into the opening 9. Said throat plate is also formed with a stitch tongue 15, which extends rearwardly between the needles 11, 11 into the opening 9. The stitch tongue 14 is formed by the slots 16, 16, which lead from the needle openings rearwardly to the end of the stitch tongue. The stitch tongue 15 is formed by the slots 17, 17, which likewise extend from the needle openings for the needles 11, 11 rearwardly to the end of the stitch tongue. It will be noted that the inner slot 16 is between the slots 17, 17, while the inner slot 17 is between the slots 16, 16 and in the tongue 14. It will also be noted that the free ends of the stitch tongues 14 and 15 terminate substantially in the same line. In the formation of the stitches, the looper thread of the looper 12 will be laid across the stitch tongue 14, while the looper thread of the looper 13 will be laid across the stitch tongue 15.

My improved throat plate is particularly adapted for a stitching mechanism which joins and covers the meeting edges of sections of fabric so as to make a flat seam. The two edges of the fabric are abutted and are fed by the feed dog so the abutted edges are in a line passing between the inner needles 10 and 11 of the stitching mechanisms. The looper thread laid across the stitch tongue 14 will be held by this stitch tongue until after the looper thread of the looper 13 is laid across the stitch tongue 15.

The needle loops or the looper thread loops which are enchained by the inner needle of the rear pair of needles, will be laid also lengthwise of the seam across the looper threads of the front stitching mechanism. At the time these loops are laid and drawn, the looper thread of the front stitching mechanism is across the stitch tongue 14, and, therefore, I am able to form a very elastic seam, or one in which the threads when set do not draw the fabric so as to prevent the forming of a normally flat seam.

In Fig. 5 of the drawings, I have shown a slightly modified form of the invention. The throat plate 1 has the feed slots 4, 5, 7 and 8, and also the opening 9 for the needles which are arranged as described above. In place of the integral stitch tongues described, I have provided three stitch tongues 18, 19 and 20. These stitch tongues are set in grooves 21 in the throat plate, and are held therein by suitable screws 22. This permits the stitch tongues to be readily removed if broken and replaced. One of the needles 10 passes along the outer face of the stitch tongue 20, while the other needle 10 passes between the stitch tongues 18 and 19, as indicated in Fig. 5. The outer needle 11 of the rear pair of needles passes alongside of the outer face of the stitch tongue 18, while the other needle passes between the stitch tongues 19 and 20, as is also indicated in Fig. 5.

From the above it will be apparent that the stitch tongues 18 and 19 combine to form a single stitch tongue for the rear pair of needles, while the stitch tongues 19 and 20 combine to form a stitch tongue for the front pair of needles. The free ends of these stitch tongues terminate in substantially the same line as above described and accomplish the same purpose.

In Fig. 7, I have shown more or less diagrammatically a bottom plan view of a seam stitched on my improved throat plate. In this figure, the fabric is indicated at F; the threads of the needles 10—10 are indicated at *n*—*n*; the thread of the looper 12 coöperating with the needles 10—10 is indicated at *l*; the threads of the needles 11—11 are indicated at *n'*—*n'*, and the thread of the looper 13 which coöperates with the needles 11—11 is indicated at *l'*.

It is obvious that minor changes in the details of construction and the arrangement of parts may be made, without departing from the spirit of the invention as set forth in the appended claims.

Having thus described my invention, what I claim as new and desire to secure by Letters Patent, is:—

1. A throat plate having an opening adapted to receive two pairs of needles, one of which is arranged in rear of the other and offset relative thereto, said throat plate having stitch tongues extending into said opening, the stitch tongue for the front pair of needles being extended to a point in rear of the rear pair of needles, said stitch tongue for the front pair of needles having a portion thereof in common with the stitch tongue of the rear pair of needles.

2. A plate having an opening adapted to receive two pairs of needles, one of which is arranged in rear of the other and off-set relative thereto, said plate having stitch tongues extending into said opening, one of said stitch tongues having a thread slot for one of the needles of one pair and the other stitch tongue having a thread slot for one of the needles of the other pair.

3. The combination of a plate having a needle opening therein, pairs of needles arranged one in rear of the other and staggered relative to each other, three fingers carried by said plate and projecting into said needle opening, the central finger extending between the needles of each pair, the other fingers extending respectively between one pair of needles and outside of the other pair of needles, and all of said fingers terminating in rear of the rear pair of needles.

In testimony whereof, I affix my signature in the presence of two witnesses.

CHESTER McNEIL.

Witnesses:
S. GEORGE TATE,
A. F. BREDSHALL.