Dec. 21, 1943. W. H. FRICK 2,337,095

RANGE

Filed March 8, 1940 5 Sheets-Sheet 1

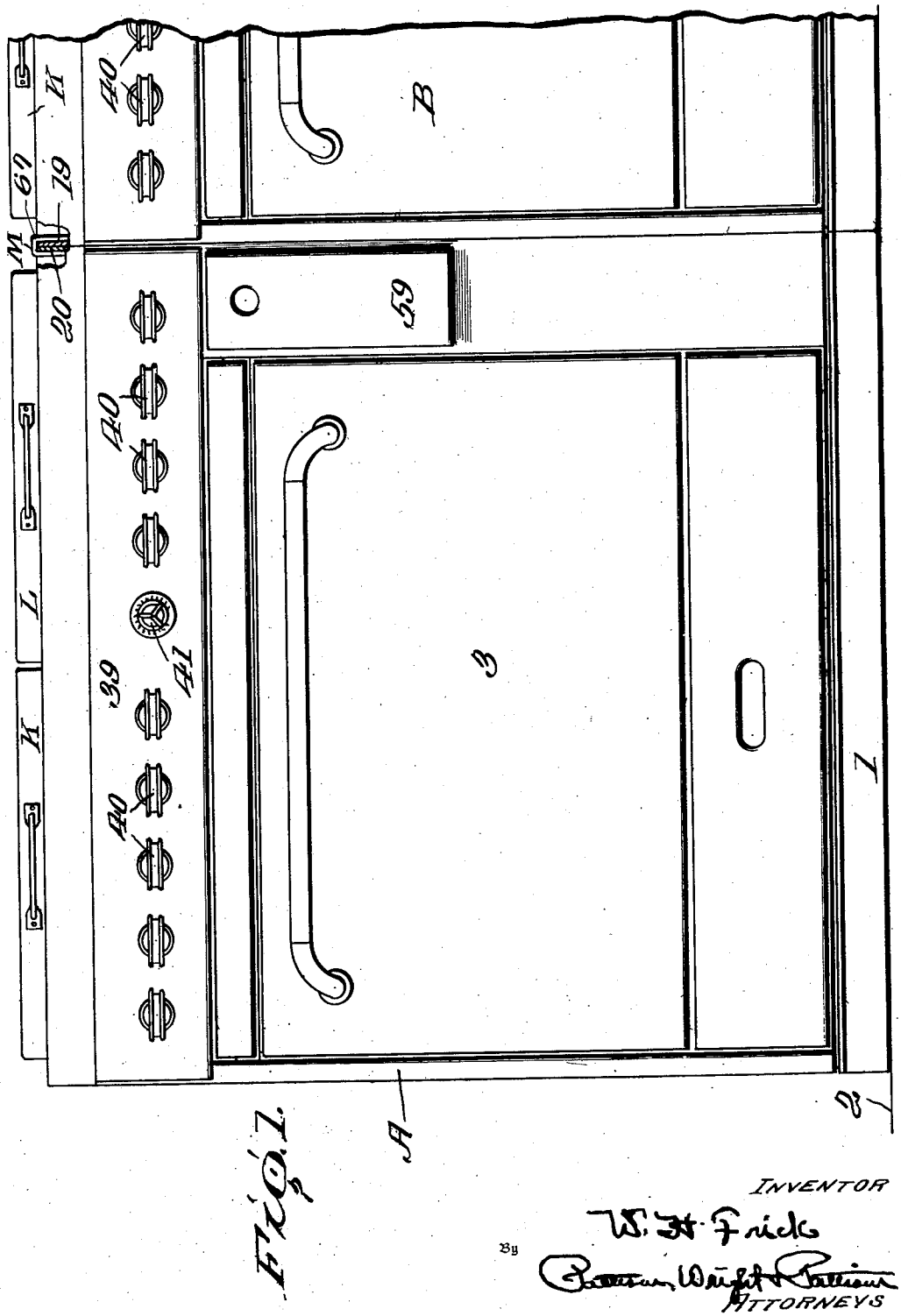

FIG. 1.

INVENTOR
W. H. Frick
By Bowman, Wright & Pattison
ATTORNEYS

Dec. 21, 1943. W. H. FRICK 2,337,095

RANGE

Filed March 8, 1940 5 Sheets-Sheet 2

FIG. 2.

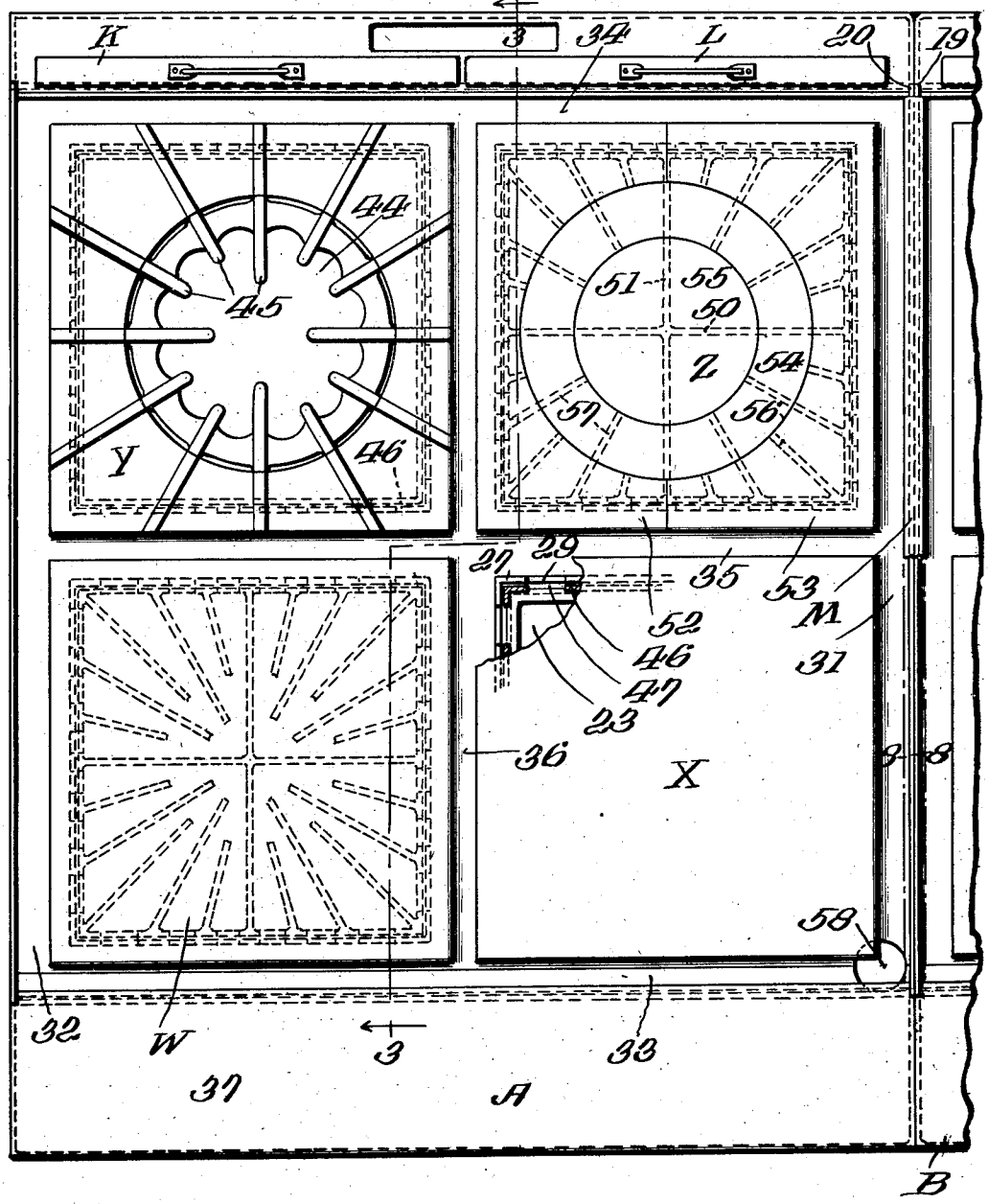

INVENTOR

W. H. Frick

By Fulton, Wright & Pollock

ATTORNEYS

Dec. 21, 1943. W. H. FRICK 2,337,095

RANGE

Filed March 8, 1940 5 Sheets-Sheet 3

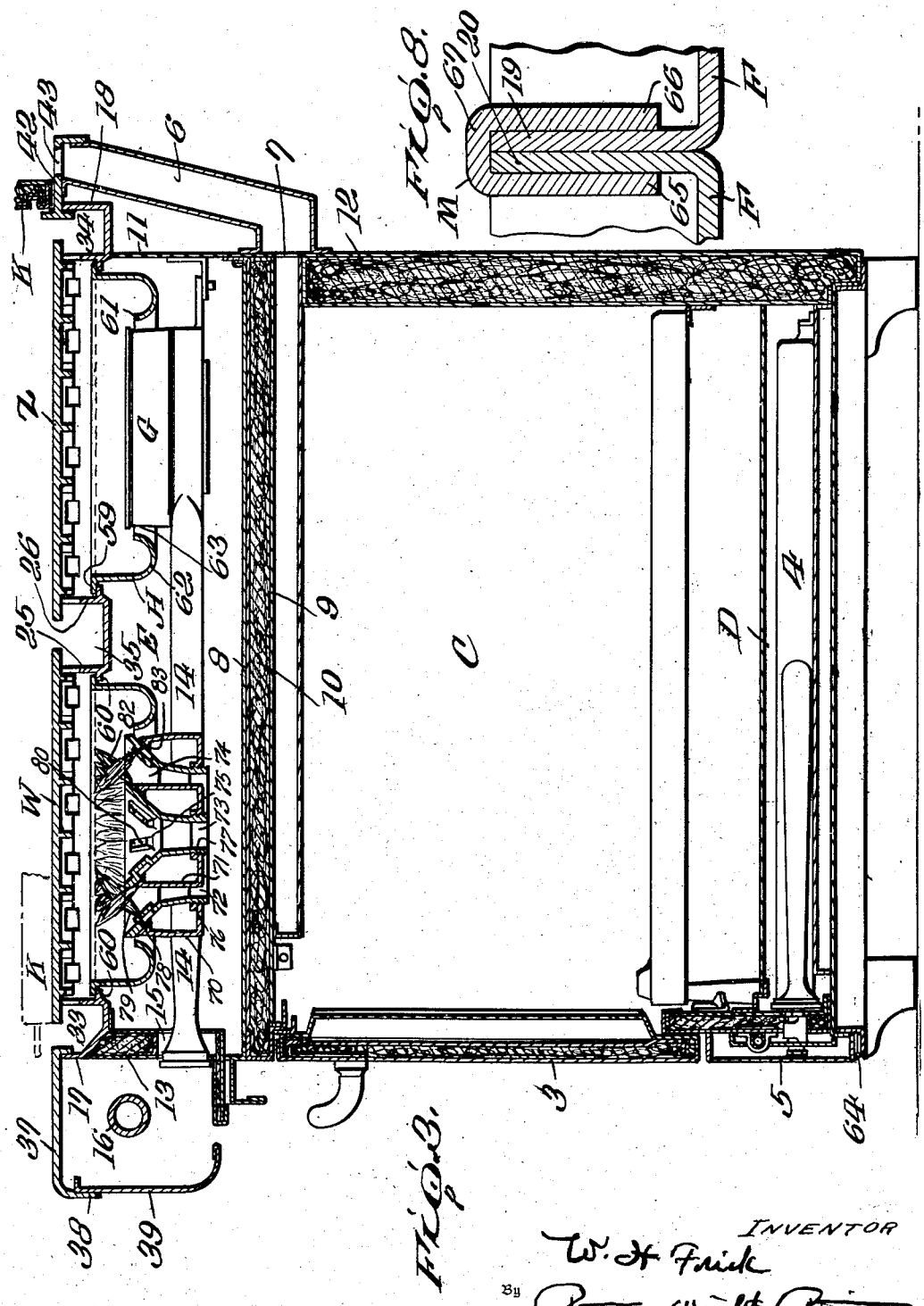

FIG. 3.

FIG. 8.

INVENTOR
W. H. Frick
By Patterson, Wright & Patterson
ATTORNEYS

Dec. 21, 1943. W. H. FRICK 2,337,095

RANGE

Filed March 8, 1940 5 Sheets-Sheet 4

Fig. 4.

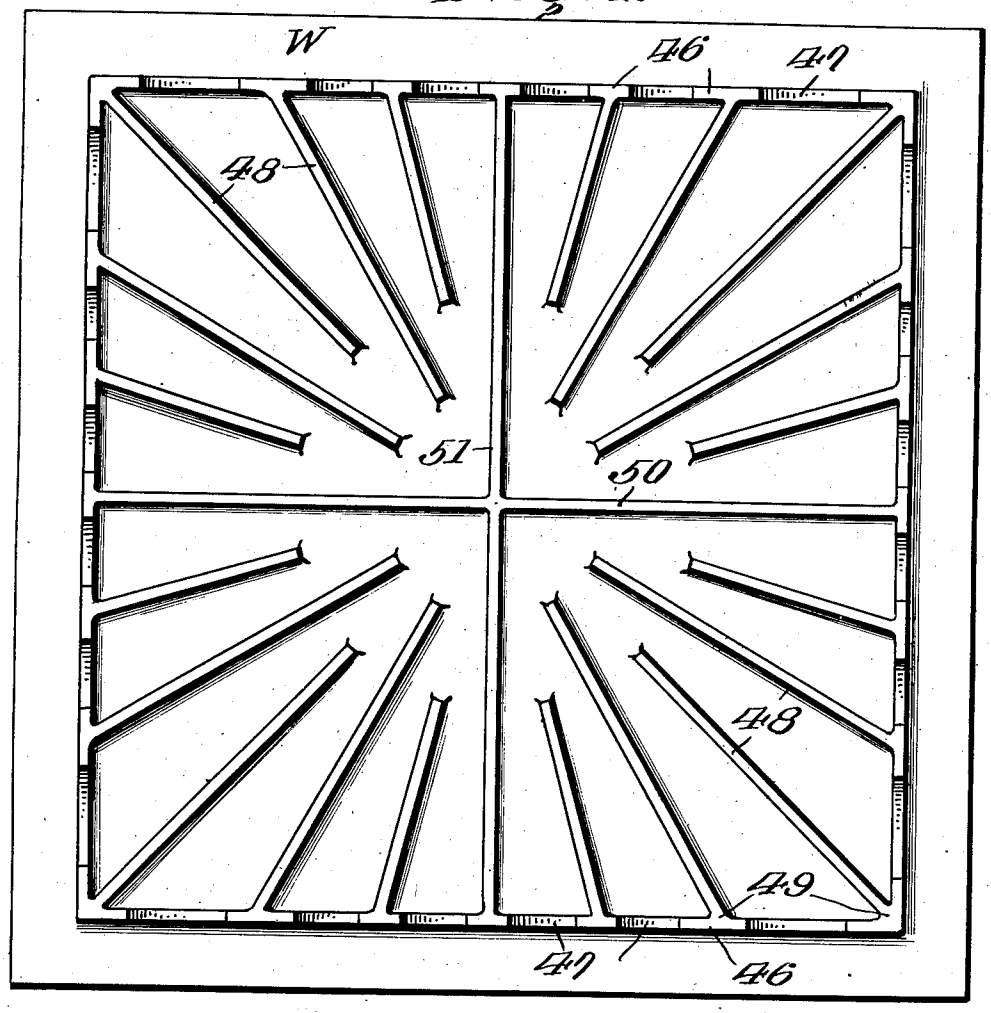

Fig. 5.

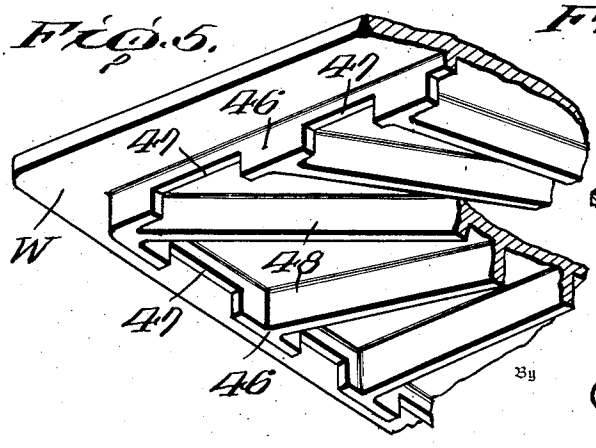

Fig. 6.

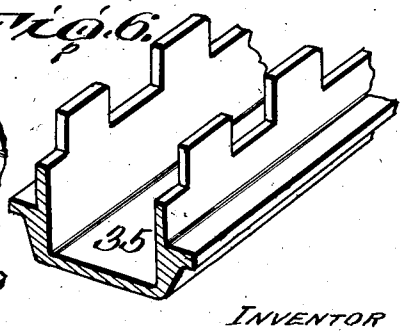

INVENTOR

W. H. Frick

By Pattison, Wright & Pattison

ATTORNEYS

Dec. 21, 1943. W. H. FRICK 2,337,095

RANGE

Filed March 8, 1940 5 Sheets-Sheet 5

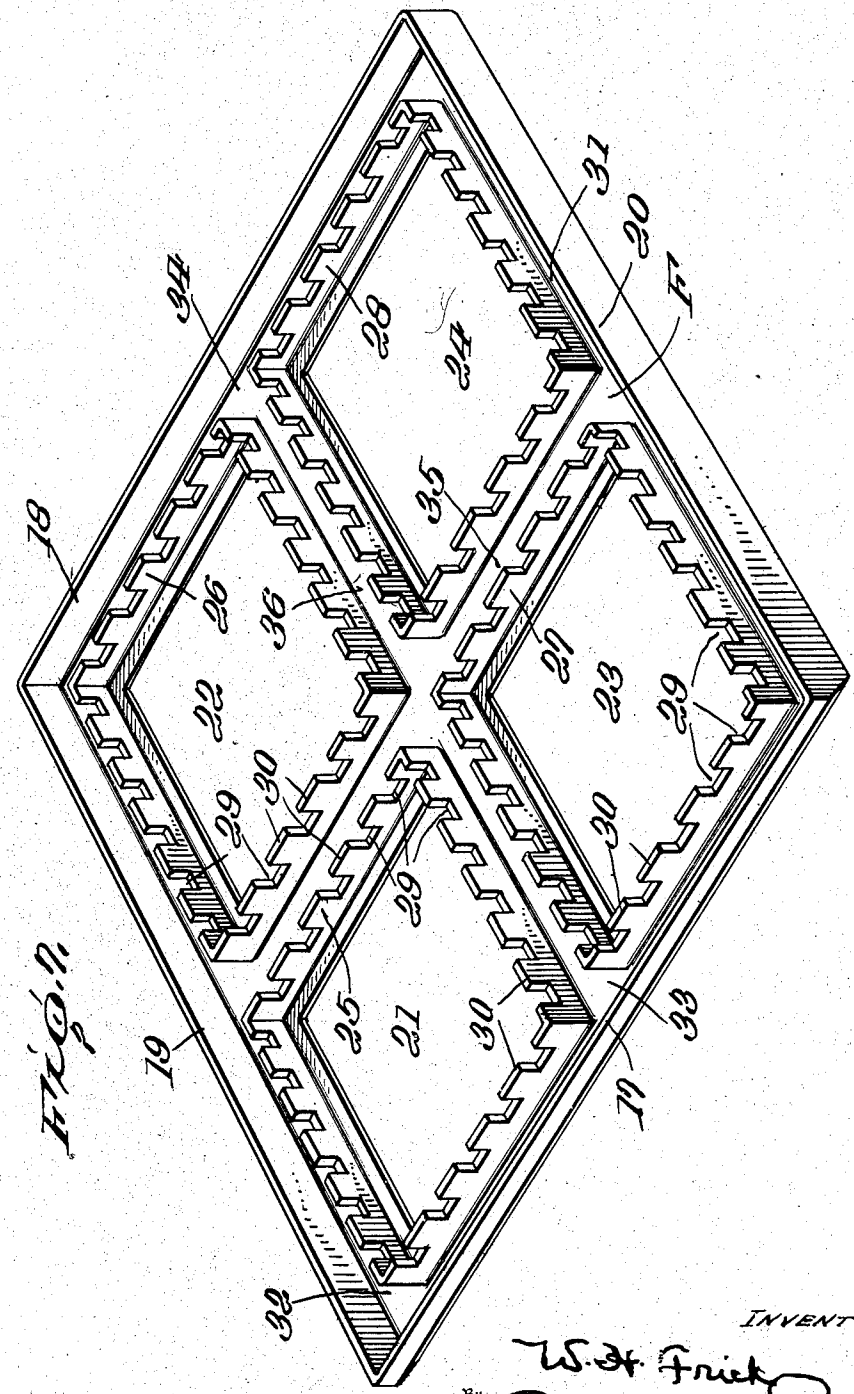

Fig. 5.

INVENTOR

W. H. Frick

By Pattern, Wright & Pattern

ATTORNEYS

Patented Dec. 21, 1943 2,337,095

UNITED STATES PATENT OFFICE

2,337,095

RANGE

William H. Frick, Cleveland, Ohio, assignor to American Stove Company, St. Louis, Mo., a corporation of New Jersey

Application March 8, 1940, Serial No. 323,018

13 Claims. (Cl. 126—39)

The present invention pertains more particularly and specifically to the cooking top portion of a range which portion is ordinarily but not necessarily positioned at and forms at least a part of the upper end of a range.

One of the objects of the invention is to provide a novel and improved manner of venting the cooking top burner chamber in a solid cooking top type of range.

A further object is to construct the under side of the cooking top plates in a manner whereby in cooperation with the venting arrangement a uniform heat distribution to the cooking top plates is obtained.

In carrying out and accomplishing the foregoing object cooking top plates of an individual and improved construction are provided.

Another object is to provide a range in which a plurality of individual cooking top plates are provided and which are freely removable and interchangeable so as to render the range more flexible to the varied types of cooking which may be performed upon and by it.

Other specific objects, novel features of construction and improved results of a range built in accordance with the present invention will appear in more detail from the following description when read in the light of the accompanying drawings which illustrate a preferred embodiment of the structure which has been conceived to accomplish the desired and improved results.

In the drawings:

Figure 1 is a front view of a pair of ranges arranged in a unit and incorporating the present invention.

Figure 2 is a top plan view of the ranges appearing in Figure 1 of the drawings, but with the covers K and L in the open or lifted position and a portion of the view being broken away and shown in horizontal section.

Figure 3 is a vertical sectional view, taken on the line 3—3 in Figure 2.

Figure 4 is an underside plan view of one of the cooking plates of the range.

Figure 5 is a fragmentary underside perspective view of the cooking plate illustrated in Figure 4 of the drawings.

Figure 6 is a fragmentary perspective view partly in vertical section through the range top intermediate a pair of cooking top plates.

Figure 7 is a top perspective view of the range top with the cooking plates removed.

Figure 8 is a vertical sectional view taken on the line 8—8 of Figure 2 of the drawings.

The present range was conceived and has been designed primarily for use as a heavy duty range, that is, the type of range ordinarily found in restaurant and hotel kitchens or the kitchens of hospitals or similar places where meals in large numbers and food in large quantities is cooked, but many of the novel features of the range are equally applicable to ranges built for domestic use.

In the kitchens of restaurants, hotels and like places it is common practice to utilize a plurality of ranges placed in side to side abutting relationship to provide long cooking units and in Figures 1 and 2 of the drawings a portion of such a unit is illustrated. In these figures of the drawings there is a range A and adjacent to and abutting one side thereof there is a second range B. It is to be understood that the number of ranges so placed would be controlled only by the amount of total cooking facilities required by each particular installation.

The present invention pertains for the most part to a specific improved construction of the upper or cooking top end or portion of the ranges and the remaining structure of the ranges can be of any ordinary conventional construction. In the present instance the ranges are of the so-called solid base type in that their bases 1 rest upon the floor 2. Above the base there is a bake oven or chamber C which in Figure 1 of the drawings lies behind an oven door 3. By reference to Figure 3 of the drawings it will be seen that below the oven there is a burner chamber D within which is disposed any suitable type of burner 4 to which gas or other suitable fuel is fed in any convenient manner. The front end of the burner chamber is closed by a panel 5 which for the purpose of adding to the appearance of the range is disposed flush with the oven door 3.

An outlet flue pipe 6 is positioned at the rear of the range and has communication with the oven chamber through a suitable opening 7.

The oven is of the insulated type and above it is positioned the cooking top burner chamber E the bottom 8 of which is parallel to the top 9 of the oven being separated therefrom only by the insulating material 10. The rear wall of the cooking top burner chamber is designated at 11 and can be a continuation of the rear wall 12 of the oven. The front of the cooking top burner chamber is closed by a suitable panel 13 and the side walls of the chamber are the continuation of the outer side walls of the range which likewise constitute the outer side walls of the oven chamber. A range top or top frame designated

as an entirety by F and most clearly illustrated in Figure 7 of the drawings is suitably supported upon the front, rear and side walls of the cooking top burner chamber. This range top or top frame is of a special construction the nature and functions of which will be hereinafter specifically described.

A burner G is positioned within each of the four corners of the cooking top burner chamber and below the four openings of said top. These burners are illustrated as being circular in form but they need not be of this specific structure but are in any event preferably composed of a pair of concentrically arranged burner arms the outer of which is 70 and the inner 71. The arms in this instance are of circular formation but could be square, rectangular or some other specific form. They are arranged in separated relationship to form between them an annular secondary air passageway 72 and the inner arm is provided with a central secondary air passageway 73. Each of the burner arms is provided with a cap. The cap on the outer arm is designated at 74 and that on the inner arm at 75. These caps are threadedly attachable and detachable as indicated at 76 and 77 respectively and their upper ends are disposed in a plane inclined to the horizontal as clearly appears in Figure 3 of the drawings. The inclination of the upper cap end of the outer burner arm is such that when the inner face of this cap is provided with burner parts 78 in spaced relationship around its circumference these ports burn flames 79 which are inclined inwardly towards the inner burner arm and upwardly towards the cooking top.

The upper end of the cap of the inner burner arm is similarly inclined and between its peripheral edge and the upper end of the burner arm the arm is provided with a plurality of burner ports arranged in spaced relationship around the perimeter or circumference of the arm. These burner ports are arranged at an inclination to burn outwardly and upwardly extending flames 82 which cross the flames 79 at approximately right angles to provide what might well be termed a cross fire burner.

On its inner face the obliquely arranged upper end of the cap 75 of the inner burner arm is provided with a plurality of burner orifices 80 arranged in spaced relationship around the circumference of the cap and by reason of these burner ports being disposed at right angles to the cap end the flames burned thereat are inclined inwardly and upwardly to provide a ring of flame at the center of the burner and above the central secondary air passageway 73 of the inner burner arm.

From this construction it will be seen that there will be three rings of flame. One ring will be defined by the flames 79, a second ring by the flames 82 and a third ring by the flames burned at the innermost burner ports 80. It will be further seen that due to the manner in which the flames are burned heat is applied under the center of the cooking top plates and also in two rings which are between the center of the plate and its outer edge. This means that there is not a cold spot in the center of the cooking top plate as is so often the case in respect to ranges now known and in use and that there is also adequate heat at the outer as well as intermediate portions of the plate which results in a more uniformly heated solid cooking top plate or a more uniformly heated utensil in the event a grid type cooking top plate is substituted for a solid plate.

The intake manifolds 14 of these burners extend outwardly through suitable openings such as 15 in the front wall 13 of the cooking top burner chamber and are suitably connected to a gas or fuel supply manifold pipe 16 disposed in front of and extending across the front end of the range.

The range top or cooking top frame F is of a size and shape to completely cover the upper end of the range and by reference particularly to Figures 2, 3 and 7 of the drawings it will be seen that it is of a pan-like construction, that is to say, the main portion of the top is depressed and is provided with circumferential and upwardly extending walls. The walls at the front and rear edges of the top are designated at 17 and 18 respectiveily while the side walls are designated 19 and 20. The depressed main top portion is provided with four openings 21, 22, 23 and 24 which are of equal size and each of which in turn is provided with a circumferential upwardly extending surrounding wall designated as 25, 26, 27 and 28 respectively for the openings 21, 22, 23 and 24. The walls which surround the four openings have their upper edges serrated or notched as most clearly appears in Figure 7 of the drawings so as to provide throughout their lengths cut-out portions which constitute passageways 29. These passageways are of course separated by wall portions 30 which are tongue-like in nature.

The openings 21, 22, 23 and 24 are inset from the peripheral edges of the main top with the result that the outer end walls of the opening are in spaced-apart parallel relationship with the end walls 19 and 20 of the plate to provide trough-like passageways 31 and 32. Similarly the front walls of the openings 21 and 23 and the rear walls of the openings 22 and 24 are disposed in spaced parallel relationship to the front and rear walls 17 and 18 of the plate to form trough-like passageways 33 and 34.

The rear walls of the openings 21 and 23 and the front walls of the openings 22 and 24 are spaced apart and in parallel relationship to provide a transverse trough-like passageway 35 the ends of which are in communication with the side passageways 31 and 32. The side walls of all the openings at their interior side edges are disposed in spaced-apart parallel relationship to provide a trough-like passageway 36 which extends from front to back, in respect to the range, and has its front and rear ends communicating respectively with the front passageway 33 and the rear passageway 34.

A supplemental top portion 37 is suitably secured at its inner edge to the vertical front wall 17 of the main top and extends outwardly in a horizontal plane and is provided with a downturned edge 38 to which is suitably secured a downwardly extending panel 39 which is arranged in spaced relationship to the front closure wall 13 of the cooking top burner chamber and provides a chamber or housing within which is concealed the fuel supply manifold pipe 16 and the suitable connections between it and the intake ends of the burner intake manifold pipes 14. By reference to Figure 1 of the drawings it will be seen that on the panel 39 are mounted the fuel control valve handles 40 as well as the oven temperature heat control setting handle and dial 41 when the baking oven is provided with a thermostatically operated automatic temperature control which is often the case.

A second supplemental range top portion 42 is suitably secured to the vertical top plate wall

18 at the rear of the range and to it the upper end of the flue pipe 6 is suitably secured and discharges through an opening 43 in said member.

On ranges of the character here disclosed various types of cooking are performed and it has been found that it is not always particularly desirable to provide all of the cooking top areas identical in nature. By reference to Figure 2 of the drawings it will be seen that the cooking top plates are designated as an entirety at W, X, Y and Z. The cooking top plates W, X and Z are solid plates whereas the plate Y is only partially solid and has a centrally disposed opening 44 over which a utensil can be supported upon suitable grid-like members 45.

However in all instances the cooking top plates have a dimension greater than the dimension of the range top openings 21, 22, 23 and 24 and are provided with circumferential and downwardly extending flanges 46 at their under sides which flanges are inset from and in spaced parallel relationship to their peripheral edges and are adapted to telescope and be disposed within the upwardly extending side walls of the several openings 21, 22, 23 and 24.

By reference to Figure 3 of the drawings it will be seen that these cooking top plates rest upon the upper edges of the side walls surrounding the openings in the range top and extend slightly beyond said walls at the four sides of the opening. The height of the opening walls is made such that when the cooking top plates are in place their upper faces are in horizontal alignment with one another as well as with the front apron-like portion 37 of the range to provide a flush or level cooking top over which utensils can be freely slid. The depending flanges 46 at the under side of each cooking top plate are serrated to provide throughout the lengths of said flanges spaced-apart cut-out portions providing openings 47 which when the plates are in position over their respective openings register with the cut-out portions or passageways 29 of the opening side walls as is most readily apparent in Figures 2 and 3 of the drawings. However when a cooking top plate such as Y is provided in which there is a central opening for the passage of products of combustion from the cooking top burner chamber the depending flange of the plate is not serrated as it is unnecessary to provide such serration in this specific form of cooking top plate.

By reason of the openings all being of the same size and the cooking top plates being all of the same size they are freely interchangeable over any of the openings 21, 22, 23 and 24 and additionally it will be obvious that extra cooking top plates can be kept on hand and the range fitted with cooking top plates all of the same character if it should be so desired.

The cooking top plate X constitutes nothing but a solid metallic plate which, it will be clear from the foregoing description, can be readily removed from or placed over any one of the four range top openings 21, 22, 23 and 24. The cooking top plate W is more specifically illustrated in Figures 4 and 5 of the drawings and is similar to the cooking top plate X in that it is a flat solid metallic member but on its under side it is provided with a plurality of spaced-apart radial and downwardly extending ribs 48 the inner ends of which terminate short of the center of the plate while their outer ends 49 abut and merge into the tongue-like portions 46 of the circumferential flange which portions are intermediate the flange cut-out portions or openings 47. This construction provides a plurality of conduits at the under side of the plate which extend from the center of the plate towards and communicate with the openings 47 in the plate flange which openings in turn register with and are in communication with the cut-out portions or openings 29 in the walls which surround the openings in the main range top. In addition to the radially extending flanges 48 I provide a rib or fin 50 which extends from the plate flange at one side to the plate flange at the opposite side and a second rib or fin 51 disposed at right angles to the rib 50 and which extends from the plate flange at the front of the plate to the plate flange at the rear thereof. These fins or ribs 50 and 51 divide the under side of the cooking plate into four sections and in cooperation with the radially extending ribs act as one wall of a conduit communicating with a pair of passageways 47 in the plate flange 46.

Cooking plates X and W are made in one piece while the cooking plate Z is made in a plurality of pieces. The plate Z is very similar in construction to the plate W in respect to the ribs at its under side. This plate is made in a plurality of pieces designated as 52 and 53 which when in place provide an angular plate having a central opening within which is disposed and suitably supported a ring 54 within which in turn is disposed and suitably supported a circular plate portion 55. By removal of either the plate 55 or the plate 55 and the ring 54 a plate having a comparatively small or a comparatively large center opening is provided. At their under sides the portions 52 and 53 of the plate are provided with downwardly extending radially extending ribs 56 similar to those defined in respect to the plate W. The ring 54 likewise has radially extending ribs 57 which are intended to be brought into alignment, as illustrated in Figure 2, with alternate ribs 56 on the plate portions 52 and 53. There are the same division ribs 50 and 51 previously described which divide the under side of the plate into four sections. In this instance these particular ribs are carried by the plate portions 52 and 53, the ring 54 and the center circular plate 55 and are intended to be brought into registered alignment as is clearly illustrated in Figure 2 of the drawings.

These fins or ribs at the under sides of the cooking top plates have a double function. They define passageways for conducting the products of combustion which are generated by the burners to the escape openings 29 in the walls surrounding the main range top openings 21, 22, 23 and 24. Venting cooking top burner chambers in this manner is novel and makes it possible to eliminate the complications which are always incident in the ordinary and conventional range which is provided with a back flue. Additionally in conducting the products of combustion to discharge in the manner described equal distribution of heat to all parts of the cooking top plates is assured which is highly desirable. The downwardly extending ribs or fins at the under sides of the cooking top plates additionally constitute absorption members which add to the heat absorption area of the cooking top plates which makes for economical and efficient operation of the range.

Another desirable result of the construction is the reduced area of contact of the cooking top plates with the main range top F. Supported in the manner heretofore described and which is

clearly illustrated in the drawings it will be seen that the cooking top plates do have a remarkably small area of contact with the upper edges of the walls surrounding the openings in the range top which results in the reduction to a minimum of any heat conduction from the cooking top plates to the main range top. By reducing to the minimum the conduction of heat away from the cooking top plates efficiency in the operation of the range and a consequent reduction in operating costs is obtained.

From the foregoing it will be understood that when the range is in operation with any one of the three solid types of cooking top plates W, X or Z that the hot products of combustion are discharged into the trough-like passageways or flues which completely surround each of the main cooking top burner openings **21**, **22**, **23** and **24** and escape freely into the atmosphere from said trough-like flues or passageways.

In many instances cooking is done directly on the solid cooking top plates rather than in a utensil and when this cooking operation is completed the grease and foreign substance on a cooking top plate can be scraped or brushed into any one of the surrounding trough-like passageways and from them can be carried to the discharge opening **58** provided at one of the front corners of the main range top and which has communication with a grease drawer or receptacle **59**, see Figure 1 of the drawings, which is slidably retained in the range for removal therefrom as occasion requires. To facilitate drainage of grease from the U-shaped passageways or flues all of said passageways could be made to drain towards the before-referred to outlet passageway **58**.

One each of the burners G is of course disposed in the cooking top burner chamber beneath each of the openings **21**, **22**, **23** and **24** thereof and a removable combination sanitary and aeration tray H is provided for use in conjunction with each of these burners. Each of these trays at its upper end has an outwardly extending and horizontally disposed circumferential flange **59** which is supported upon a circumferentially extending shoulder **60** which extends inwardly from each of the walls surrounding the burner openings **21**, **22**, **23** and **24** in the main range top F. These trays rest freely upon the shoulders and can be removed upwardly through the openings after removing the cooking top plate therefrom. The trays extend downwardly into the cooking top burner chamber and have inwardly extending and upturned bottom ends **61** to provide a trough **62** which will catch and retain any grease or foreign substance which might pass downwardly towards the burner chamber which possibility is not remote when a cooking top plate such as the plates Y or Z are utilized. The inturned ends **61** of the plate are disposed in spaced relationship to the burner to provide a circumferential passageway which will permit the passage of secondary air freely to and about the burner which is essential to the efficient operation of the burner.

In many instances ranges of this type are provided with covers adapted to be moved into place over the cooking top of the range when it is not in use. I have provided such covers which in this instance are two-part in nature and designated at K and L respectively in Figure 2 of the drawings. These covers have their rear ends pivotally connected to the rear range top portion **42** and when in elevated and open position not only are completely removed from any interference to cooking operations on the range but also serve as splash backs. The covers in their closed position are illustrated in Figure 1 of the drawings and also in dotted lines in Figure 3 of the drawings. From these figures of the drawings it will be seen that even though the burners were in operation and the covers were moved to a closed position the heat and products of combustion generated by the burners or burner left in operation could vent through the U-shaped flue passageways as the covers do not extend over the flue passageway **33** at the front of the range and that they do not completely cover the flue passageways at the two side edges of the range.

For facility in making observation and adjustment of the oven burner the panel **5** closing the oven burner chamber is made in the form of a door which is pivotally mounted as at **64**.

When one or more ranges are arranged in side to side abutting relationship to provide an elongated cooking unit the adjacent side walls **19** and **20** of the range top F are brought into abutment as clearly appears in Figures 1 and 2 of the drawings. A combined cap and clamp M is used in conjunction with these abutting walls. This clamp is of a U-shape in cross section and is applied to the abutting walls **19** and **20** in the manner illustrated in Figure 8 of the drawings. The side walls **65** and **66** of the cap receive between them the adjacent and side walls **19** and **20** of the two range tops F. The bottom of the U which is represented by the wall **67** constitutes a seal to prevent possibility of grease seeping downwardly between the abutting faces of the range side walls **19** and **20**. By reference to Figure 2 of the drawings it will be seen that the cap M is elongated or in strip form and extends throughout the length of the abutting range top side walls **19** and **20**.

The pan-type or pan-like cooking top top frame in addition to having the advantages hereinbefore described has the further attribute of making a more sanitary range in that it is extremely easy to clean and to be kept clean.

It is to be understood in respect to this particular cooking top top frame that it serves not only as a top frame and cooking top for the range but also as a venting means for the cooking top burners and has a cross collection and drainage device or means for the cooking top of the range.

In some installations it has been found desirable to provide high shelves and elevated broilers which are superimposed upon the rear end of the range, and it will be obvious that there is nothing to prevent providing such structures and supporting them upon and over the rear ends of the cooking or range top of the present ranges.

Modifications and alterations of the specific structure heretofore described and which is disclosed in the accompanying drawings can be made without departing from the spirit of the invention, and the invention is to be limited only within a broad interpretation of the hereinafter appended claims.

I claim:

1. In a cooking range, a range top having an upwardly extending circumferential wall and provided with a plurality of burner openings spaced from said wall and from one another, an upwardly extending flange surrounding each of the said openings, said wall and said flanges together with said range top forming troughs which interconnect and surround each burner opening, a burner beneath each opening, an individual

cooking plate forming a closure for each burner opening, and passageways in each of said flanges surrounding a burner opening and acting to vent into said troughs the products of combustion generated by said burners.

2. In a cooking range, a range top having an opening therein, a burner positioned beneath said opening, an upwardly extending flange surrounding said opening provided at spaced intervals throughout its length with vent openings, a cooking plate supported on said flange and provided at its under side with a depending surrounding flange adapted to telescope the flange surrounding said opening, and said cooking plate surrounding flange being provided at spaced intervals throughout its length with a plurality of vent openings adapted to be positioned in registry with the vent openings in said flange which surrounds said burner opening.

3. In a range, an improved cooking top comprising, a burner, a double top located above said burner and consisting of lower and upper portions, said lower portion provided with a burner opening surrounded by an open top U-shaped trough, the inner wall of said trough provided with openings communicating with said burner opening, and said upper top plate portion constituting a cooking top which is movably and horizontally disposed and rests upon said trough inner wall, and said cooking top plate extending over said trough but having its circumferential edge stopping short of engagement with the outer wall of said trough to provide an annular outlet opening from the upper end of said trough past the circumferential edge of said cooking top plate for the escape of products of combustion generated by said burner.

4. In a solid top type of cooking range, a range top having a burner opening therein, an upwardly extending flange surrounding said opening, a burner positioned below said opening, a solid cooking plate above and closing said opening, said flange which surrounds said opening being provided with vent passageways in spaced relation throughout the length of the flange to permit the products of combustion generated by said burner to escape outwardly from beneath said plate, said burner having inner and outer burner arms, the outer burner arm provided with burner orifices at which burn flames directed upwardly and inwardly so that the flames travel across the under side of said plate and towards those flange vent passageways which are positioned opposite and remote to said burner orifices, the inner burner arm provided with burner orifices at which burn flames directed upwardly and outwardly toward those vent passageways in said surrounding flange which are positioned nearest to said inner burner arm orifices, for the purpose described.

5. A solid top type of cooking range comprising, a cooking top burner chamber having burners therein, a top for said chamber comprising a pan-like member having upturned peripheral edges which are at the sides, front and back respectively of said burner chamber top, the bottom of said top being provided with a plurality of openings constituting burner openings above the burners in said burner chamber, an upwardly extending flange surrounding each of said burner openings, the flanges surrounding each opening being positioned in separated relationship to the flanges of all other openings and likewise in separated relationship to the upturned peripheral edge of the pan-like top member, an individual imperforate plate forming a closure for each of said openings, the peripheral edges of all of said plates being in spaced relationship to one another and to the upturned edge of said pan-like top member, the flanges surrounding said burner openings being provided with vent passagesways in spaced relation throughout the length of said flanges, and said passageways communicating with the burner chamber and with the space exterior of said flange through which said passageways extend.

6. A construction such as defined in claim 1 wherein, each cooking plate is provided at its under side with a depending circumferential flange adapted to telescope any one of the flanges surrounding any one of said burner openings, and said cooking plate flange being provided at spaced intervals throughout its length with a plurality of vent openings adapted to be positioned in registry with the passageways in the flange surrounding the burner opening which said cooking plate closes.

7. A construction such as defined in claim 1 wherein, each cooking plate is provided at its under side with a depending circumferential flange adapted to telescope any one of the flanges surrounding any one of said burner openings, said cooking plate flange being provided at spaced intervals throughout its length with a plurality of vent openings adapted to be positioned in registry with the passageways in the flange surrounding the burner openings which said cooking plate closes, each of said plates at their under sides provided with a plurality of downwardly and radially extending ribs constituting channelways leading from the center of the plate toward the peripheral edges thereof, and each of said channelways at its outer end communicating with a vent opening of the said circumferential flange of the cooking plate.

8. In a cooking range, a range top having an upwardly extending circumferential wall, said top provided with a burner opening all sides of which are in spaced relationship to said wall, an upwardly extending flange surrounding said opening, said range top with said circumferential wall and flange together forming a continuous trough surrounding said burner opening, a burner beneath said opening, a cooking plate forming a closure for said burner opening, and a plurality of passageways in said flange providing communication between the trough and said burner opening at a point below said cooking plate.

9. In a range, an improved cooking top comprising, a burner chamber having a plurality of spaced burners therein, a double top for said chamber consisting of lower and upper portions, said lower portion provided with a burner opening for each of said burners, an open top U-shaped trough surrounding each of said burner openings, those trough walls nearest said burner openings provided with openings communicating with the burner opening which they surround, said upper top portion constituting a plurality of cooking top plates each of which is movably and horizontally disposed and closes one of said burner openings, each of said cooking top plates extending over the trough surrounding the burner opening with which it is associated but having all of its peripheral edges stopping short of engagement with the outer trough wall and out of engagement with any of the other cooking top plates to provide about each burner opening an annular outlet opening from the upper end of all of said troughs.

10. A construction such as defined in claim 1 wherein, the cooking top plates overhang but do not close the open tops of said troughs, and the passageways through the flanges surrounding the burner openings are positioned considerably above the bottom edges of said flanges and the bottoms of said troughs, said construction enabling said troughs to act as collection troughs for grease scraped or running over the edges of said cooking top plates and of boil-overs occurring on said cooking top plates and preventing said grease and boil-overs from passing into said burner openings and fouling the burners.

11. A construction such as defined in claim 1 wherein, the cooking top plates overhang but do not close the open tops of said troughs, and the passageways through the flanges surrounding the burner openings are positioned considerably above the bottom edges of said flanges and the bottoms of said troughs, said construction enabling said troughs to act as collection troughs for grease scraped or running over the edges of said cooking top plates and of boil-overs occurring on said cooking top plates and preventing said grease and boil-overs from passing into said burner openings and fouling the burners, said troughs being inclined to drain toward a common low point, and means at said low point permitting the escape of the matter collected in said troughs.

12. A construction such as defined in claim 1 wherein, each of said cooking plates at its under side is provided with a plurality of downwardly and radially extending ribs constituting channelways leading from the center of said plate toward the peripheral edges thereof, and each of said channelways at its outer end communicating with one of said passageways in said flange which surround the burner opening with which said plate is associated.

13. A construction such as defined in claim 1 wherein, the range is provided with covering means movable to an open position to make the entire range top available for use and movable to a closed position to lie horizontally over said range top, and said range top covering means being of a size not to completely cover the open tops of those burner troughs at the front and sides of the range top and to thereby permit said troughs to discharge the products of combustion of said burners to atmosphere if said burners should be left at operation with the range top covering means in a closed position.

WILLIAM H. FRICK.