April 20, 1943. W. F. HELMOND 2,316,865

TYPEWRITING MACHINE

Filed June 20, 1940 5 Sheets-Sheet 1

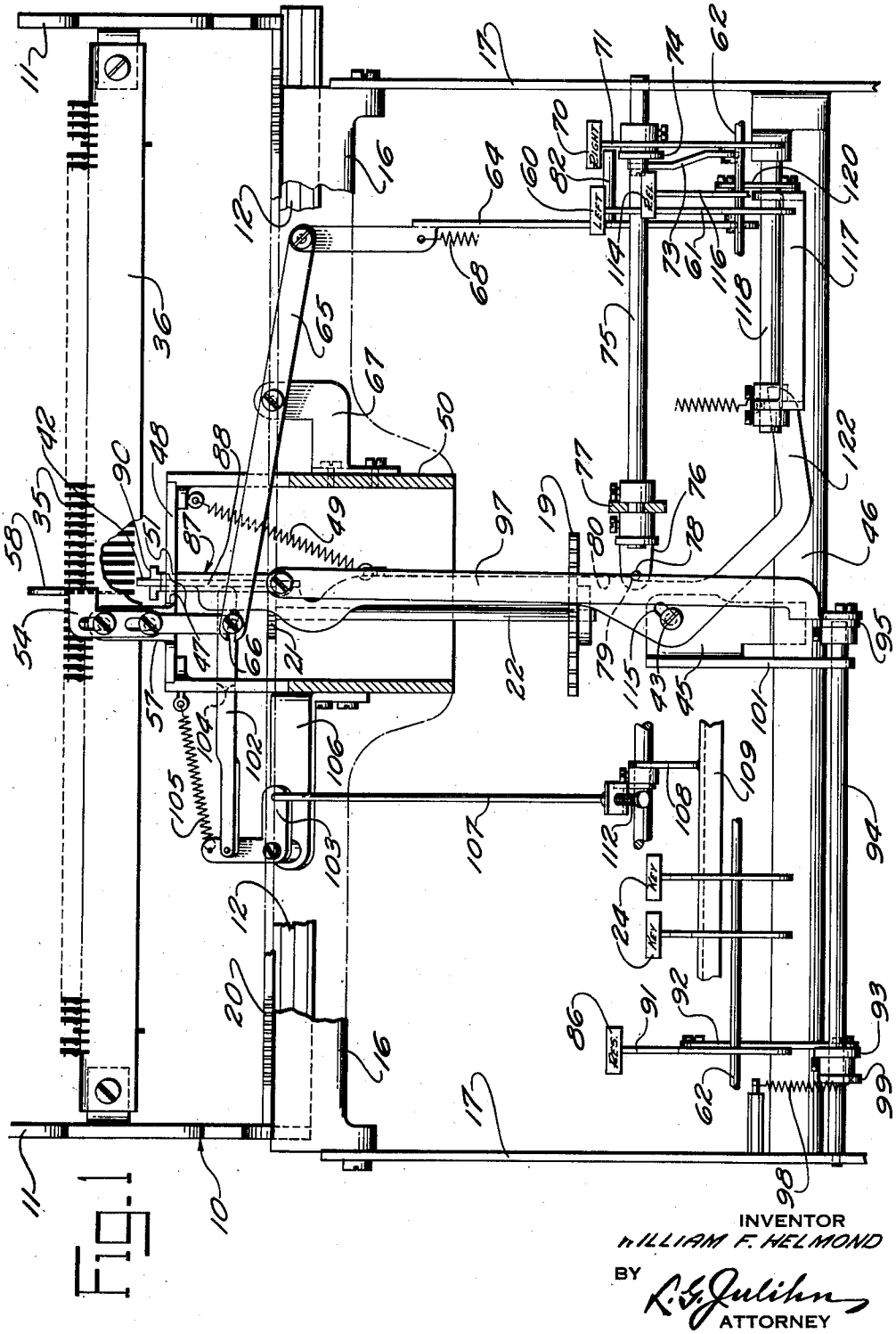

Fig. 1

INVENTOR
WILLIAM F. HELMOND
BY
L. G. Julihn
ATTORNEY

April 20, 1943. W. F. HELMOND 2,316,865

TYPEWRITING MACHINE

Filed June 20, 1940 5 Sheets-Sheet 2

Fig. 2

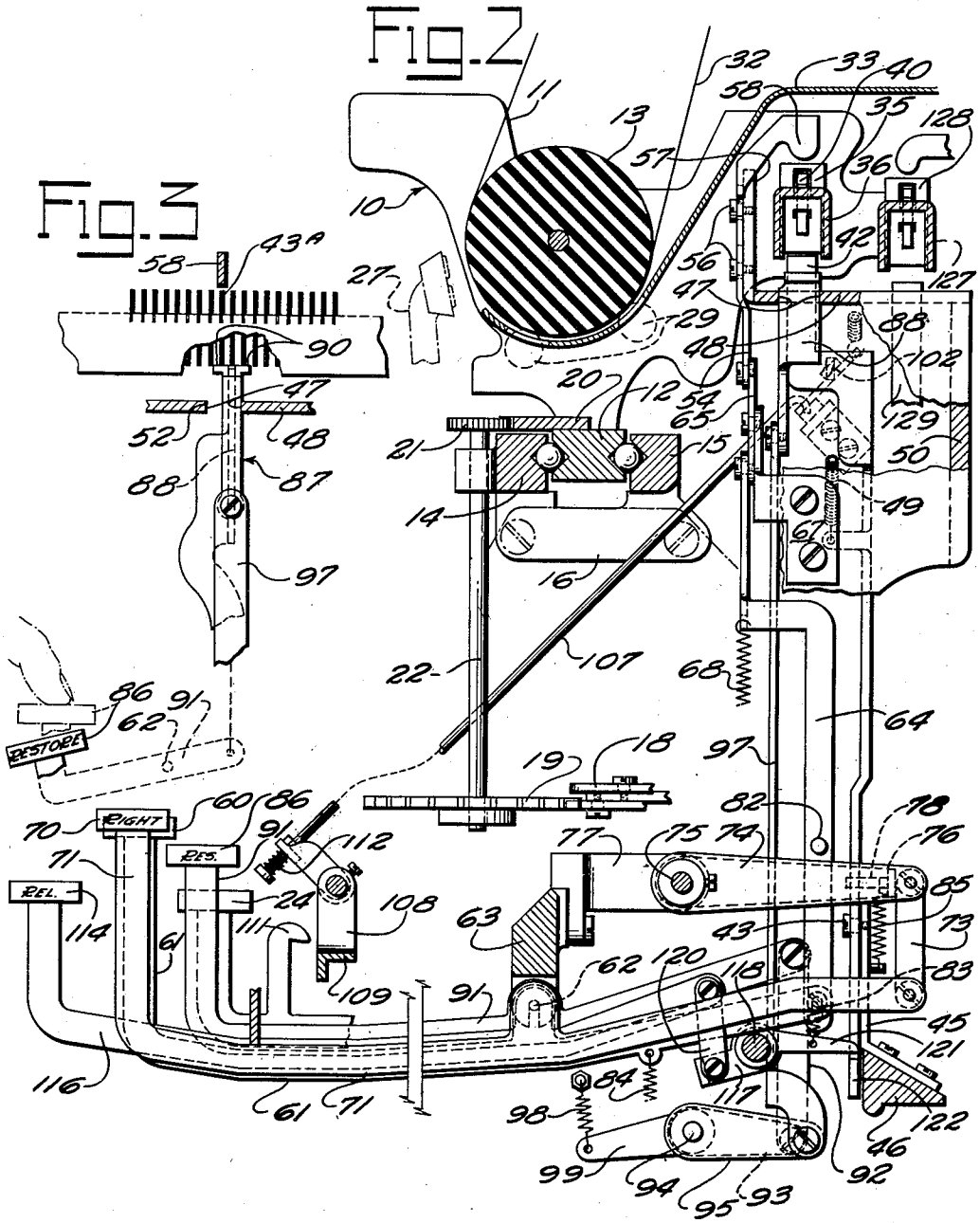

Fig. 3

INVENTOR
WILLIAM F. HELMOND
BY
ATTORNEY

April 20, 1943. W. F. HELMOND 2,316,865

TYPEWRITING MACHINE

Filed June 20, 1940 5 Sheets-Sheet 3

Fig. 4

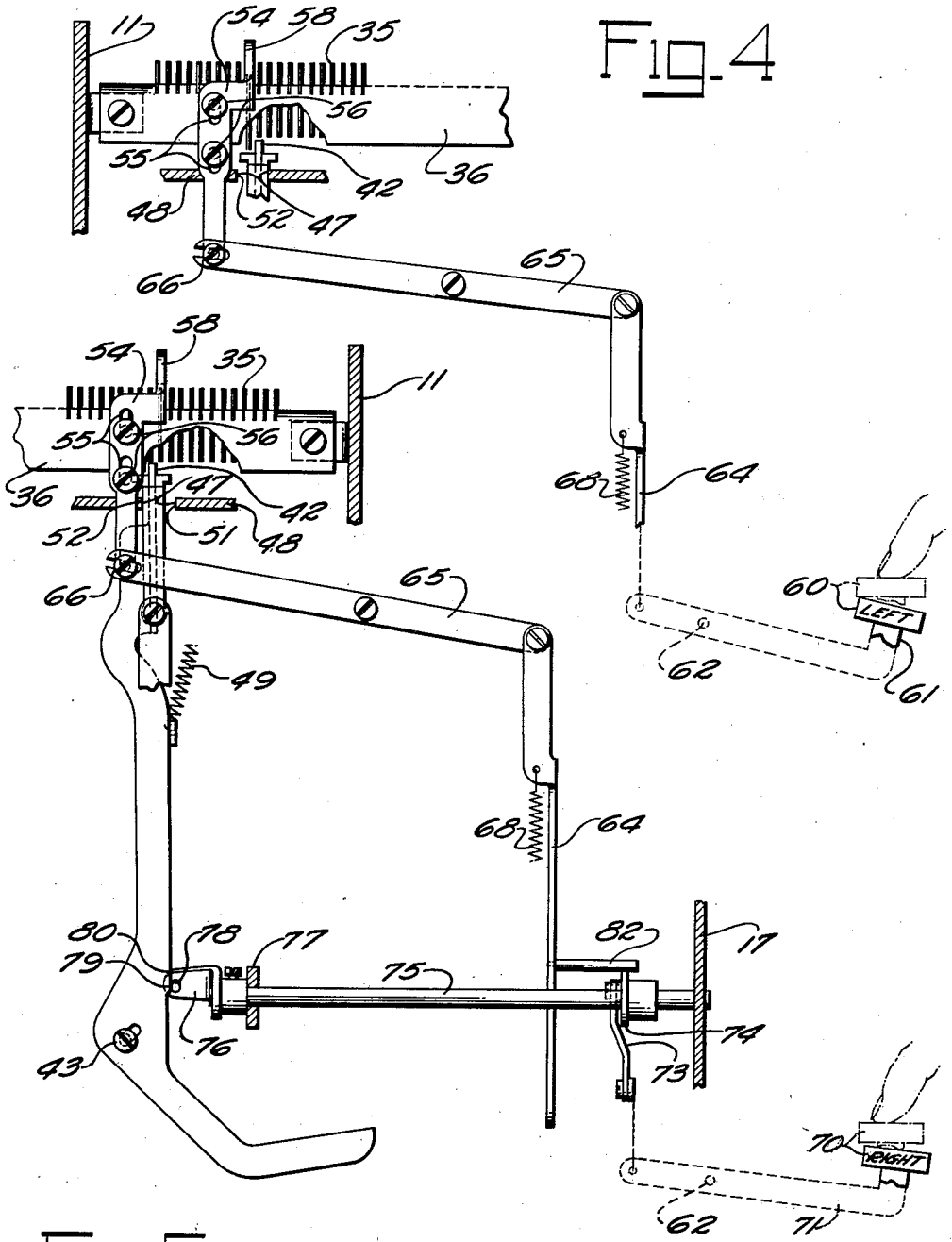

Fig. 5

INVENTOR
WILLIAM F. HELMOND
BY
K. G. Julihn
ATTORNEY

April 20, 1943. W. F. HELMOND 2,316,865

TYPEWRITING MACHINE

Filed June 20, 1940 5 Sheets-Sheet 4

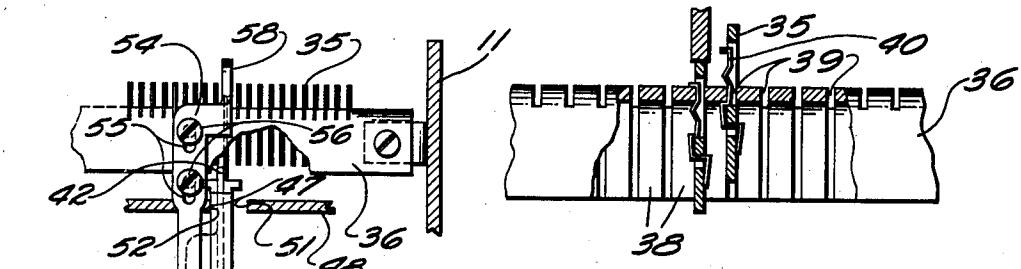

Fig. 7

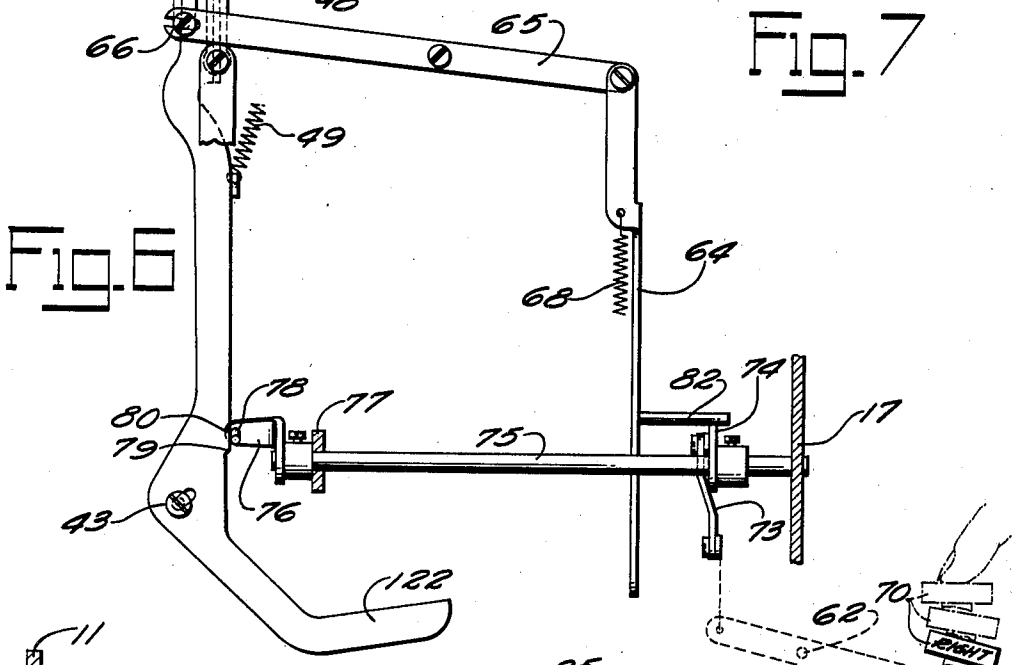

Fig. 6

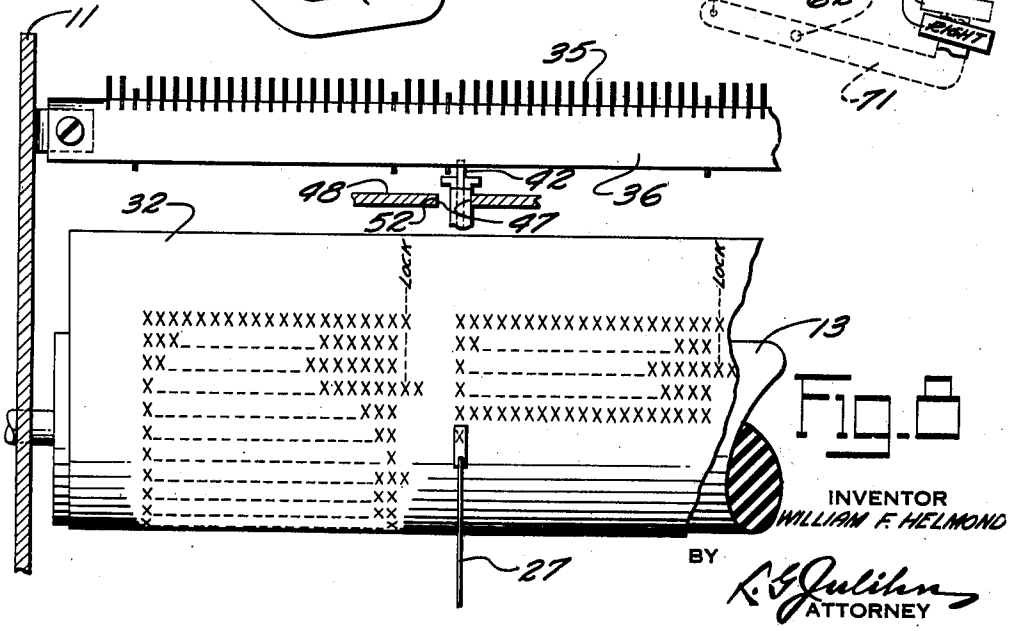

Fig. 8

INVENTOR
WILLIAM F. HELMOND

BY
ATTORNEY

April 20, 1943. W. F. HELMOND 2,316,865

TYPEWRITING MACHINE

Filed June 20, 1940 5 Sheets-Sheet 5

Fig. 9

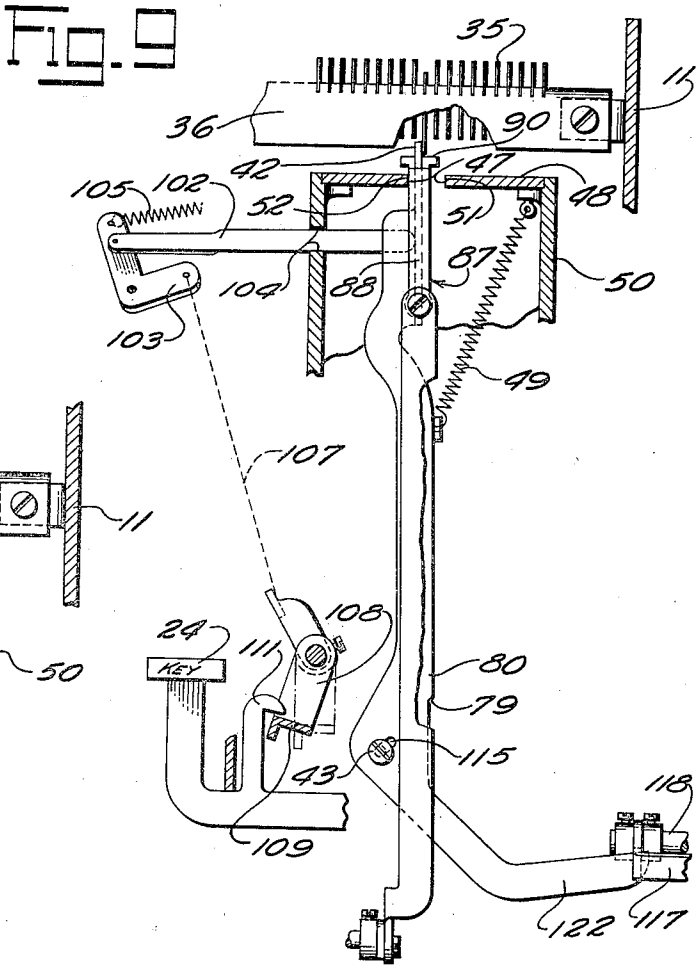

Fig. 10

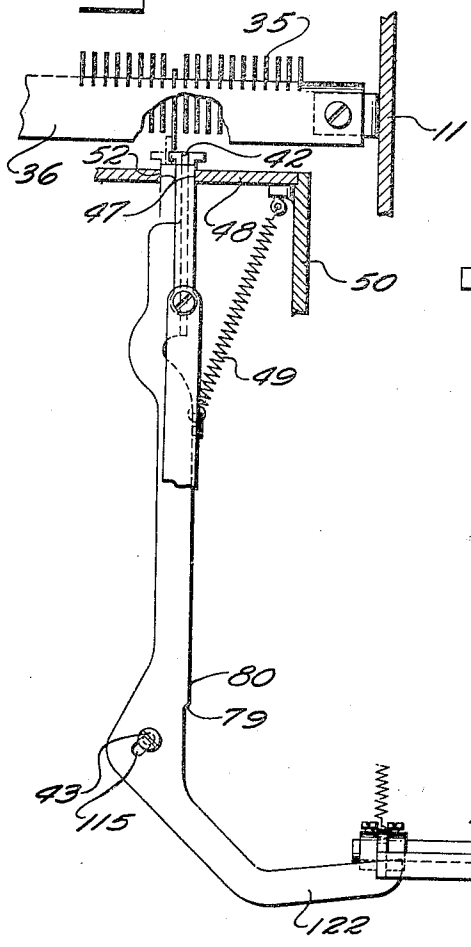

INVENTOR
WILLIAM F. HELMOND
BY
K. G. Julihn
ATTORNEY

Patented Apr. 20, 1943 2,316,865

UNITED STATES PATENT OFFICE

2,316,865

TYPEWRITING MACHINE

William F. Helmond, Clinton, Conn., assignor to Underwood Elliott Fisher Company, New York, N. Y., a corporation of Delaware

Application June 20, 1940, Serial No. 341,420

22 Claims. (Cl. 197—63)

This invention relates to typewriting or similar machines having a carriage movable upon a frame, and more particularly to devices employed in such machines to regulate the limits between which a carriage may travel.

Devices of this kind usually embody a left and a right margin stop adjustable to various fixed positions on the carriage along a single rack bar, and a counterstop on the frame.

It is also known to provide a row of stops that are individually settable at various points along the carriage to cooperate with counterstopping devices for controlling the margins within which a work-sheet is to be typed. The invention is more specifically related to devices of such general character.

One of the objects of the invention is to provide simple, economically manufactured and reliably operating devices for selectively rendering certain of a plurality of stops operative for confining the movement of the carriage within desired marginal limits.

It is another object of the invention to provide a series of stops, each one of which is settable to cooperate with counterstopping means either for limiting the leftward or the rightward movement of the carriage.

A further object of the invention is to provide identical stops that are adapted to serve as left or right margin stops and means associated therewith to set these stops selectively with respect to counterstopping devices for either left or right margin-gaging function.

It is another object of the invention to contrive means for conveniently setting stops at will for left or right margin-gaging function, the means being operable in different positions of the carriage to set different stops.

Another object of the invention is to provide simple and efficient devices for selectively restoring such stops which have been set for margin-gaging function.

It is also an object of the invention to provide conveniently settable margin-stopping devices for determining a plurality of line lengths in a single traverse of the carriage thus providing for typing a plurality of adjacent columns on a sheet.

Other objects of the invention are to associate key locking and margin-releasing devices with the aforesaid improved margin-controlling mechanism.

Various other features and objects of the invention will readily become apparent from the description and claims that follow and from the accompanying drawings.

According to the illustrated preferred embodiment of the invention, a series of stops are supported at letter space intervals upon a typewriter carriage for individual setting movement from idle to margin-gaging positions. A stop-setter upon the main framework of the machine is operable to set individually any stop that is first positioned opposite it by movement of the carriage. In order that the stop-setter may set a stop for left or right margin-gaging operations, it is conceived to arrange the counterstop movable upon the frame for locating it either leftward or rightward of the stop that in the particular position of the carriage is opposite the stop-setter. In other words, the counterstop is arbitrarily conditionable for cooperation with a stop that is being set, to limit the carriage travel in either carriage feed or return direction. The counterstop is influenced to normally occupy a position just rightward of the location of the stop-setter. Two stop-setting keys are provided, one of which when actuated operates said stop-setter and additionally displaces said counterstop, while the other one when actuated operates said stop-setter without displacing the counterstop. Therefore, depending on which one of the keys is operated, a set stop becomes either a left or a right margin stop. A stop set as a right margin stop, that is, as a line-end stop, is capable of moving the counterstop when the carriage approaches the line-end and a key-locking mechanism operatively associated with the counterstop is thereby rendered effective. The counterstop is key-movable to inoperative position to release the carriage when desired, for movement beyond the stop position. A key-operable device is also provided to restore any stop that is brought into adjacent relation with the left or the right side of the counterstop.

In the drawings:

Figure 1 is a front view of a typewriting machine embodying applicant's novel margin-gaging devices including key-controls therefor. For the sake of clearness, many parts unnecessary for an understanding of the invention have been omitted.

Figure 2 is a sectional side elevation of substantially the organization of parts shown in Figure 1.

Figure 3 is a fragmentary front view showing the stop restoring mechanism of the invention in operated position, a restoring key being diagrammatically shown as having been operated.

Figure 4 is a fragmentary front view illustrating a carriage stop set adjacent to the left of the counterstop by the operation of a diagrammatically represented left margin setting key.

Figure 5 is also a fragmentary front view of the margin-gaging devices showing the counterstop laterally displaced by a partial depression of a schematically represented right margin setting key.

Figure 6 is a fragmentary view similar to Figure 5 showing a settable stop set adjacent to

the right of the counterstop by the completed depression of the right margin setting key.

Figure 7 depicts the manner in which the settable stops are mounted and detented upon a supporting rack.

Figure 8 is a schematic illustration showing separate stops set for left and right margin-gaging function for each one of two spaced writing columns.

Figure 9 is a diagrammatic view illustrating a key locking mechanism rendered effective by the movement of the carriage to a line end limit as defined by a set stop.

Figure 10 is a fragmentary front view showing the counterstop moved to an ineffective position by the margin-release key.

Referring now more particularly to Figures 1 and 2 of the drawings, a carriage 10 includes spaced carriage-ends 11 that are rigidly connected by a carriage bar 12. A platen cylinder 13 extends parallel to the carriage bar 12 and is revolvably mounted at its opposite ends in the end plates 11 of the carriage. The carriage bar 12, and, therefore, indirectly the carriage, is guided in a conventional manner between trackways 14 and 15 of a frame-member 16 which extends intermediate two opposite side walls 17 of the machine. A usual carriage spring, not shown, moves the carriage in carriage feed direction leftwardly under the control of an escapement 18. The escapement normally checks the rotation of an escapement wheel 19 that is geared to a carriage-rack 20 by means of a shaft 22 and a pinion 21. The escapement 18 is operated in a conventional manner, not shown, at the actuation of type-keys 24 and a space-key not shown. The typing instrumentalities may be of any known kind and may include type bars 27 (see Figure 2) that are movable against the platen 13 by the type-keys 24 in a manner not shown. The carriage letter-spaces in consequence of each type-key operation so that the characters will be typed one next to the other. Feed rolls 29 indicated in dot-and-dash lines in Figure 2 bear normally against the underside of the platen 13 to hold a work sheet 32 in typing position thereupon. The work sheet may rest at the rear of the platen 13 upon an apron 33 extending upwardly and rearwardly from the bottom side of the platen. A series of blade-like stops 35 are supported at letter space intervals upon a U-shaped channel bar 36 that is secured at its ends upon the carriage ends 11. The stops 35 are vertically guided between buttressing teeth 38 provided upon both internal sides of the U-bar and their upper ends protrude through slots 39 cut into the bar 36. All stops are movable or projectible from identically idle to identically set margin-gaging positions. A detenting spring 40 is associated with each stop to hold it in either one of said two positions. In their effective or set position, the stops 35, defining, respectively, the left and right margins, are in alignment with each other in the direction of carriage movement, particularly as to their lower portions which engage a counterstop 42 in barring carriage travel at said margins. In their idle or unprojected positions, all stops 35 are clear of the counterstop 42 which embodies an upright arm that is limitedly swingable to two positions about its lower end on a pivot pin 43 upon a bracket 45 that is secured to a cross bar 46 of the framework of the machine. The upper portion of the counterstop 42 protrudes upwardly through a rectangular hole 47 provided in a horizontal plate 48 that is fixed upon the top of a housing 50 carried by the carriage track frame member 16. A spring 49 normally draws the upper end of the counterstop rightwardly against an abutment 51 formed by the right side of the rectangular hole 47. The left side of the hole 47 constitutes an abutment 52 for limiting the extent to which the counterstop 42 is swingable leftwardly about its pivot pin 43; see Figures 5, 6 and 9. The front and rear sides of the hole 47 serve to guide the counterstop 42 at its upper end in its lateral movements. The stops 35, which set or projected, may limit either the leftward or the rightward movement of the carriage 10 depending on whether or not the counterstop 42 is moved leftward of the stop 35 that is being set. As seen in Figure 2, a stop setting element 54 reaching upwardly at the front of the stop-carrying bar 36 has two vertical slots 55, one below the other. Shouldered pins 56, extending through the slots 55 and secured to a bracket 57 rising upwardly from the plate 48, guide the stop setting element 54 for vertical movement. The stop setting element 54 has a narrow stop setting ear 58 reaching rearwardly over the stops 35 on the bar 36 and is operable to set in each letter-space position of the carriage a different stop in a setting region intermediate the two positions of the counterstop. The stops 35 are laterally spaced in agreement or in a definite ratio with the letter-feed movements obtainable by the escapement mechanism 18, 19, and the laterally stationary setting ear 58 is posed over a different stop 35 in the different letter-feed positions of the carriage. The normal lateral position of the setting ear 58 with respect to the counterstop 42 is such that the ear when it is moved downwardly will set, adjacent to the left of the counterstop, whichever stop 35 is overlying it; see Figure 4. Any stop 35 so set, limits the return, that is, the rightward movement of the carriage 10 to thereby define the left margin on the work sheet 32. For conveniently operating said setting element 54 to thereby set a stop 35 to the left of the counterstop 42, there is a left margin-setting key 60 provided near the left end of the typewriter keyboard; see Figure 1. This key 60 is mounted upon the forward end of a rearwardly extending key lever 61 which is pivoted intermediate its ends on a horizontal fulcrum rod 62. The key-lever 61 is laterally confined in a slot cut transversely into a cross-bar 63 which cross-bar also supports the fulcrum rod 62. An upwardly extending link 64 is articulated at its lower end to the rear end of the lever 61, and is pivoted at its upper end to the right end of a horizontal lever 65, the left end of which has a pin-and-slot connection 66 with the setting slide 54. The lever 65 is pivotally supported on a bracket 67 which is secured to the housing 50. A spring 68 attached to the link 64 resiliently normally holds the entire slide operating train 61, 64 and 65 in the position seen in Figures 1 and 3. Upon operation of the key 60, the train 61, 64 and 65 transmits a downward movement to the setting slide 54, so that its setting ear 58 will move downwardly and therefore set whichever stop 35 is posed underneath it. The lower end of a so set stop 35 will then be adjacent the left of the counterstop 42 (see Figure 4) and the set stop will serve in the capacity of a carriage return margin stop.

A right margin setting key 70 at the right of the left margin setting key 60, when depressed first leftwardly displaces said counterstop 42 and

thereafter operates the setting slide 54 to set whichever stop 35 is positioned underneath it. The lower end of the set stop is then adjacent to the right of the counterstop 42 so that the set stop will serve as a right margin stop, that is, a line-end margin stop. The right margin setting key 70 is mounted upon the front end of a rearwardly extending key lever 71 which like the lever 61 is also pivoted between its ends upon the fulcrum rod 62. A link 73 connects the rear end of the lever 71 to an arm 74 that is fastened to the right end of a rock shaft 75, to the other end of which an arm 76 carrying a pin 78 is fastened. As seen in Figure 1, the right end of the shaft 75 is pivoted in the right side wall 17 of the machine and the other end is pivoted to a bracket 77 that is secured to the cross bar 63 of the machine frame. During the initial downward motion given to the key 70, the pin 78 moves upwardly to thereby act upon a cam-face 79 provided upon the counterstop 42 to swing the latter leftwardly substantially against the abutment 52 in the plate 48, as seen in Figure 5. During the remainder of the key stroke, the pin 78 glides idly along a vertical face 80 of the counterstop arm 42, as seen in Figure 6. From Figures 1 and 2, it can be seen that the arm 74 lies normally a short distance below a pin 82 projecting from the vertical link 64 that is operable by the left margin setting key 60. At the initial down-stroke of the right margin setting key 70, as seen in Figure 5, the arm 74 rises upwardly to engage the pin 82 while the counterstop 42 is being displaced leftwardly. As clearly seen in Figure 6, during the remainder of the key stroke, while the pin 78 glides along said face 80, the arm 74 engages the pin 82 and lifts the link 64 so that the stop setting slide 54 becomes operated and therefore sets to the right of the counterstop 42 whichever stop 35 may be posed underneath the setting ear 58. A stop so set functions as a line-end margin stop. The connection between the link 64 and the rear end of the key lever 61 may include a slot 83 to permit the link to be raised without operating the lever. A return spring 84 retains the lever 61 in normal position independent of the link 64. The entire mechanism that is operable by the left margin setting key 60 returns to normal position whenever the key is released. Of the mechanism operable by the right margin setting key 70, the counterstop 42 remains leftward of the set stop after the release of the key. The key-lever 71 and the parts 73 to 76, inclusive, are returned by a spring 85 that is attached to the pin 78 on the arm 76.

Any stop 35, whether set for left or right margin gaging function, is operative to arrest the carriage in the feed position in which the stop has been set by the setting ear 58. The small space seen in Figure 4 between the counterstop 42 and the set stop 35 corresponds to the usual back lash of the escapement mechanism 18, 19. With a stop 35 set for left and a stop 35 set for right margin-gaging function, as seen in Figure 1, the carriage is movable between the very carriage positions in which the stops were set.

Any set stop 35 may be individually restored by the operation of a restoring key 86, after the carriage has been moved leftwardly or rightwardly to bring the stop which is desired to be restored into adjacent relation with the counterstop 42. As clearly seen in Figures 1, 2, 3 and 9, a stop restoring shoe 87 is movably carried upon the upper end of the counterstop arm 42 and comprises a channel-shaped portion 88 which slidingly embraces the front and the two lateral sides of the counterstop 42 near its top end. The channel portion 88 presents at each opposite side of the counterstop, near the upper end thereof, a restoring ledge 90. The ledges 90 are normally below all the stops 35, but the key 86 when operated will raise the shoe 87 so that the ledges 90 will engage and restore any set stop 35 that is adjacent to one or the other side of the counterstop. The restoring key 86 is located near the left end of the keyboard (see Figure 1) and is mounted upon the front end of a key lever 91 which, at its rear end, has a link connection 92 to an arm 93 that is secured to a horizontal rock-shaft 94. At about the center of the machine, in the lateral region where the counterstop arm 42 is pivoted, the shaft 94 carries another arm 95 which is connected with the shoe 87 by a link 97. The rock-shaft 94 is pivoted at one end in the left side wall 11 of the machine and at the other end in a forwardly bent ear 101 of the bracket 45. As seen in Figure 2, the entire train from the key 86 to the shoe 87 is resiliently held in the normal position by a spring 98 that is acting upon an arm 99 fastened to the shaft 94. Since the link 97 is capable of moving substantially on an equal pivotal arc with the counterstop 42, it is readily seen that the lateral position of the stop arm has no influence on the vertical position of the restoring shoe 87. Figure 3 shows the shoe in an actuated position, a stop 43^a having been restored by one of the ledges 90.

It is desirable that the type keys 24 be locked against operation as the carriage approaches the line end defined by a set stop 35. As hereinbefore made clear, a stop 35 set for line-end margin gaging operation engages and laterally moves the counterstop 42 when the carriage approaches the line-end typing limit. This movement given to the counterstop 42 is utilized for actuating a key locking mechanism now to be described. A horizontal rod 102 is at its left end pivotally attached to a bell-crank 103 and its right end is guided in a hole 104 provided in the housing 50. A spring 105 resiliently maintains the rod 102 in contact with the left side of the counterstop arm 42. The bell-crank 103 is pivoted to a rightwardly extending bracket 106 attached to the housing 50 and is adapted to rock a key-locking bail 108 by a wire link 107. The key-locking bail 108 includes a bar 109 parallelly in back of the keyboard which is normally clear of the path of hooks 111 on the type-key levers, see Figures 1 and 2. As the carriage moves toward line-end position, a stop 35 moves the counterstop 42 leftwardly and, in consequence thereof, the parts 102, 103, 107 and 108 become displaced and thus move the bar 109 underneath the key-lever hooks 111. Under some conditions, the bar 109 may collide with the back side of a key-lever hook 111. To avoid the bending of parts in this event, a flexible element 112 is inserted in the bail operating train at the juncture between the link 107 and the bail 108. This flexible element 112 moves the bail 108 to locking position as soon as the obstructing hook 111 rises above the bar 109.

It is sometimes desirable to type beyond the margins defined by set stops 35, and for this reason, the counterstop 42 is movable below the space traversed by the stops 35, by the operation of a margin-release key 114. In Figures 1 and 2, it can be seen that the counterstop has a rightwardly and upwardly inclined slot 115, through which the pivot pin 43 passes. The counterstop

42 fulcrums normally about the lower end of the slot 115 because the spring 49 not only urges the counterstop 42 to the right but also upwardly. When the counterstop 42 is to be lowered, the key 114 is depressed so that the rear end of a pivoted key lever 116 rises and rotates a bail 117 through the medium of a link 120 about a rigid pivot stud 118. The bail 117 has a rearwardly extending finger 121 overlying an arm 122 that is integral with the counterstop arm 42 and extends rightwardly from its lower end. The bail finger 121 swings downwardly at the depression of the key 114 and moves the arm 122, together with the counterstop arm 42, downwardly. The upper end of the counterstop arm 42 is then out of cooperative range with all stops 35 and the carriage may be moved to any desired position. The slot 115 is inclined so that the counterstop arm 42 is movable downwardly without interference from the pin 78, associated wtih the mechanism for setting a stop 35 to the right of the counterstop. Figure 10 shows the counterstop arm 42 lowered by depressing the release-key 114. It is to be noted that the counterstop becomes leftwardly displaced at line end and that if thereafter the release key 114 is operated, the counterstop moves first downwardly along the left side of the settable stop and thereafter rightwardly against the abutment 51. This rightward movement allows the keylocking bail 108 to move to ineffective position. The sequence of the above movements takes place because the finger 121 in no way opposes the swinging movement of the counterstop toward the right, but in fact aids it. The release key 114 may be released immediately after operation, in which case the counterstop 42 moves upwardly under the urge of the spring 49 to occupy a position rightward of the stop 35, and the carriage is therefore free to move further in letter-feed direction.

Figure 8 shows two stops 35 set to control the opposite margins of one column and two other stops set to control the opposite margins of another column. The carriage is shown to be in a position for typing in the righthand column, the counterstop 42 being intermediate the right pair of stops 35. In order to type in the other column, it is merely necessary to operate the release key 114 while moving the carriage to within the typing range of the other column.

The tabulating mechanism may be of conventional construction and may comprise a stop carrying rack 127 similar to the rack 36 and stops 128 settably arranged thereupon and one or more key projectible counterstops 129 carried by the housing 50.

Although the invention is described with a certain degree of particularity, it is to be understood that many different embodiments are possible and that applicant's invention is not limited to the specific details, combinations and arrangements of parts shown and described. Also certain parts of the invention may be used without others.

What is claimed is:

1. A margin-gaging mechanism for a typewriter having a frame and a carriage movable leftwardly and rightwardly thereon; comprising a settable stop, a counterstop, said stop and counterstop being oppositely on the frame and on the carriage, and means, capable of selective operation, for setting said stop into operative relation with the counterstop in a specific position of the carriage, said means including a device for selectively determining different relative positions of the counterstop and the set stop in a direction of carriage travel, depending on said selective operation in stop setting, so that said stop and counterstop may serve to limit carriage movement either leftwardly or rightwardly.

2. In a typewriter having two elements, one a frame and the other a carriage movable on the frame in letter-space increments to a plurality of rest positions; a margin-gaging mechanism including a series of letter-spaced settable stops on one of said elements, said stops being settable in alignment in the direction of carriage movement, for both right and left margin gaging; counterstop means on the other of said elements adapted to coact with the set stops of said series; and means for setting a stop of said series at any carriage-rest position and for selecting its relation to the counterstop means for either right or left margin-gaging, whichever is desired, at said carriage-rest position.

3. A margin-gaging mechanism for a typewriter having two members constituting a frame and a carriage movable in letter-feed steps; comprising a series of stops on one of said members, slightly spaced in definite ratio to the letter-feed steps and settable selectively to an effective position; a counterstop on the other of said members; means on the other of said members for individually setting said stops into position for cooperation with the counterstop, with the carriage at a selective letter-feed point; and a device for selectively determining different relative positions of the set stop and the counterstop with the carriage at said selected letter-feed point, in which relative positions the set stop and counterstop may serve to limit carriage movement either leftwardly or rightwardly, barring carriage movement at said letter-feed point.

4. A margin-gaging mechanism for a typewriter having two members constituting a frame and a reciprocatory, letter-feed-controlled carriage; comprising a series of stops on the one member, slightly spaced in definite ratio to the letter-feed steps and selectively settable to identical positions effective for gaging either the left or right margins; an element on the other member, operative at a specific point, for individually setting said stops to effective positions; a counterstop on the other member; and means for causing said counterstop to be positioned selectively at either one side or the other of the specific stop-setting point, whereby a set stop of the series may be adapted to gage either the left or the right margin, arresting the carriage at the same position thereof at which the stop was set.

5. In a machine of the class described having a frame and a carriage movable thereon in opposite directions, in combination, a series of stops on the carriage arranged at spaced intervals for individual setting from an idle to a margin-gaging position, means on the frame to set said stops individually under selective control of the position of the carriage, and counterstop means on the frame conditionable for cooperation with a stop being set to limit carriage movement selectively in either direction.

6. In a typewriter having a frame and a carriage movable thereon in letter-feed and return directions, type-keys and a device on the frame operable to lock said keys against operation; a stop mounted on the carriage for movement thereon from an idle to an effective position, means on the frame operable in a particular position of the carriage to set said stop to effective position, and means on the frame adapted to

operate said key-locking device and selectively conditionable in said particular carriage position, in cooperation with said stop, to limit carriage movement in return direction or to operate said type-key-locking device.

7. In a typewriter having a frame and an escapement-controlled carriage adapted to travel leftwardly and rightwardly on the frame, a stop movable transversely of the carriage, a second stop, said stops being oppositely on said frame and on said carriage and normally non-cooperative, and means to render said stops cooperative to limit either the leftward or the rightward travel of the carriage, said means including a device independent of the escapement to cause a variation in the relative positions of said stops in the direction of carriage travel and a device to move said transversely movable stop into cooperative relation with said second stop.

8. In a typewriter having a frame and an escapement-controlled carriage adapted to travel leftwardly and rightwardly on the frame, a stop movable transversely of the carriage, a second stop, said stops being oppositely on said frame and on said carriage and normally non-cooperative, and means to render said stops cooperative to limit either the leftward or the rightward travel of the carriage, said means including a device independent of the escapement to cause a variation in the relative positions of said stops in the direction of carriage travel and a device to move said transversely movable stop into cooperative relation with said second stop, the last said device including manipulative means at the front of the typewriter.

9. In a typewriter having a frame and a reciprocatory carriage thereon feedable in letter-spaced increments, in combination, a series of stops slightly spaced in definite ratio to the letter-spaced increments and individually settable from an idle to an effective position, a counterstop, said series of stops and said counterstop being oppositely on the frame and on the carriage, means for individually setting said stops at a point in constant relation to the counterstop, and mechanism operable in part by said stop-setting means, for causing the counterstop to be positioned selectively at one side or the other of said stop-setting point.

10. In a typewriter having a frame and a reciprocatory carriage thereon feedable in letter-spaced increments, in combination, a series of stops slightly spaced in definite ratio to the letter-spaced increments and individually settable from an idle to an effective position, a counterstop, said series of stops and said counterstop being oppositely on the frame and on the carriage, key means for individually setting said stops at a point in constant relation to the counterstop, and mechanism in part operable by said key means for causing the counterstop to be positioned at one side or the other of said stop-setting point.

11. In a typewriter having a frame and a carriage movable in opposite directions thereon to different letter-feed positions, a stop on the frame, a stop on the carriage, said stops being normally non-cooperative, one of said stops being settable transversely of the carriage to render said stops cooperative in one lateral position-relation, one of said stops being laterally movable to one side of the other stop in a particular letter-feed position of the carriage, means operative when actuated after locating the carriage in said particular letter-feed position to reverse the lateral position-relation of said stops, means operable to set said settable stop while the carriage is in said particular letter-feed position, and key means selectively operable to operate said last means either alone or together with said next to the last means, whereby said stops may be rendered cooperative to limit the movement of the carriage in the desired one of the directions.

12. In a typewriter having a frame and a carriage movable thereon to different letter-space positions, a series of stops arranged at letter-space intervals on the carriage to be set individually transversely thereof from idle to margin-gaging positions, a stop-setting element on the frame opposite which a different settable stop is posed in each different letter-space position of the carriage, a counterstop limitedly displaceable on the frame from closely rightward of the setting element to closely leftward of the setting element, key-operable means to operate said setting element, and key-operable means to displace said counterstop and operate said setting element.

13. In a typewriter having a frame-member and a carriage-member laterally movable thereon in opposite directions, a series of laterally spaced stops on one of said members, each stop being supported for individual setting movement transversely of the carriage-member from an idle to a margin-gaging position, a counterstop on the other of said members having laterally opposite stop-engageable sides, stop-setting means on the counterstop-supporting member, including a right and a left margin stop-setting key, and means selectively operable by said setting keys to cause said counterstop and the stop being set to assume a selected lateral position-relation, to engage each other, in limiting carriage-member travel, at one or the other counterstop side depending on which of said setting keys is operated.

14. In a typewriter having a frame and a carriage movable thereon to different letter-space positions, a series of stops arranged at letter-space intervals to be set individually transversely of the carriage from an idle to a margin-gaging position, a counterstop, a normally idle stop setting element, said settable stops on the one hand and said counterstop and said setting element on the other hand being oppositely on the frame and on the carriage, said setting element being operable to individually set said settable stops under selective control of the position of the carriage, means operable independently of moving the carriage to effect a change in the relative lateral positions of said counterstop and said settable stops, and means operatively associated with said last means and said setting element to set a settable stop relatively to the said counterstop adjacent either the left or the right of the latter.

15. In a typewriter having a frame member and a carriage member movable thereon in letter-feed and return directions, a series of stops arranged at letter-space intervals on one of said members, type-keys, a device operable to lock said keys, a counterstop limitedly displaceable upon the other one of said members and connected to operate said device, said stops being individually settable transversely of the carriage member at either side of the counterstop to engage the latter during movement of the carriage member in letter-feed or in return direction, a set stop, if engaging said counterstop during movement of the carriage member in letter-feed direction, displacing said counterstop and therefore operating said key-locking device, and means, partaking of the lateral displacements of said

counterstop, to restore any set stop that is in adjacent relation with said counterstop.

16. In a typewriter having a frame and a carriage movable laterally thereon, stops mounted at laterally spaced intervals to be set individually on the carriage, transversely thereof from idle to margin-gaging positions, a counterstop mounted on the frame for lateral displacement from a normal to an operated position, means to laterally displace said counterstop, an element on the frame operable for setting said stops selectively under the control of the position of the carriage into cooperative range with said counterstop, said stops being settable dependent on the lateral position of said counterstop to adjoin said counterstop to the left or to the right, and a stop restoring element of greater width than the counterstop, laterally movable with the latter and operable transversely of the carriage to restore any set stop that is in adjoining relation with said counterstop.

17. In a typewriter having a frame and a carriage movable laterally thereon, type keys, a key-locking device, stops mounted at laterally spaced intervals on the carriage to be set individually transversely of the carriage from an idle to a margin-gaging position, a counterstop member mounted on the frame for leftward displacement from a normal position to an operated position to operate said key-locking device, means influencing said member toward normal position, an element on the frame operable for selectively setting said stops under control of the position of the carriage into cooperative range with said counterstop member at a point to the left of the normal position of the latter, key means to operate said setting element to thereby set a stop to the left of the counterstop member, and key means to leftwardly displace said counterstop member and to operate said setting element to set a stop to the right of said counterstop member.

18. In a typewriter having a frame and a carriage movable thereon, a series of stops mounted on the carriage at slightly spaced intervals and settable individually transversely of the carriage from an idle to a margin-gaging position, a counterstop mounted on the frame for limited lateral displacement from a normal position, means urging said counterstop to normal position, an element on the frame for individually setting said stops selectively under control of the position of the carriage to the margin-gaging position, for cooperation with said counterstop, at a point to one side of the normal position of the counterstop, key means to operate said setting element to thereby set a stop to the said one side of the counterstop, and key means to displace said counterstop from the normal position and to operate said setting element to thereby set a stop to the other side of the counterstop.

19. In a typewriter having a frame and a carriage movable thereon, a series of stops mounted on the carriage at slightly spaced intervals and settable individually transversely of the carriage from an idle to a margin-gaging position, a counterstop mounted on the frame for limited leftward displacement from a normal position, means urging said counterstop to normal position, an element on the frame for individually setting said stops selectively under control of the position of the carriage to the margin-gaging position, at a point to the left of the normal position of the counterstop, key means to operate said setting element to thereby set a stop to the left of the counterstop, and key means to leftwardly displace said counterstop and to operate said setting element to thereby set a stop to the right of the counterstop.

20. A margin-gaging mechanism for a typewriter having a frame and a reciprocatory carriage movable thereon in letter-space increments; comprising, a series of identical stops arranged, slightly spaced in definite ratio to the letter-space increments, substantially throughout the carriage run, for individual setting from an idle to an effective position for margin gaging, a counterstop effective to intercept the set stops, any two stops of said series set at opposite sides of the counterstop being adapted to gage the margins of a typing line, means including a single stop setter to individually set said stops selectively by positioning of the carriage, said series of stops on the one hand and said counterstop and said stop setter on the other hand being oppositely on the frame and on the carriage, and means providing for limited movement of the carriage after interception of a set stop of said series by said counterstop in at least one direction of carriage movement, the extent of limited movement being such that the carriage is arrested substantially at the position thereof at which the stops were set.

21. A margin-gaging mechanism for a typewriter having a frame and a reciprocatory carriage movable thereon in letter-space increments, comprising a series of identical stops arranged, slightly spaced in definite ratio to the letter-space increments, substantially throughout the carriage run, for individual setting from an idle to an effective position for margin gaging, a counterstop effective to intercept the set stops, any two stops of said series set at opposite sides of the counterstop being adapted to gage the margins of a typing line, means to individually set said stops including a stop setter effective at a setting point, said series of stops on the one hand and said counterstop and stop setter on the other hand being oppositely on the frame and on the carriage, and means mounting said counterstop for movement with the carriage between limits defining right and left positions of the counterstop at each side of said stop-setting point, to arrest the set stops substantially at said setting point irrespective of the direction of carriage movement.

22. A margin-gaging mechanism for a typewriter having a frame and a letter-feed controlled carriage movable thereon; comprising a series of uniformly-shaped stops on the carriage, arranged at letter-spaced intervals substantially throughout the carriage run, for individual setting from an idle to a margin-gaging position; a counterstop arranged on the frame to intercept the set stops, any two stops of said series set at opposite sides of the counterstop being adapted to gage the margins of a typing line; key-actuable means on the frame, including a single stop setter effective at a setting point, to individually set said stops selectively by positioning the carriage; means mounting said counterstop for movement in the direction of carriage travel between limits defining right and left positions of the counterstop at each side of said stop-setting point, to arrest the two set stops in either direction of carriage movement substantially at said setting point; and means yieldably holding said counterstop at one limit of movement.

WILLIAM F. HELMOND.