Sept. 22, 1959 J. R. YOUNKIN 2,905,821

MASS SPECTROMETRY

Filed Oct. 31, 1955 3 Sheets-Sheet 1

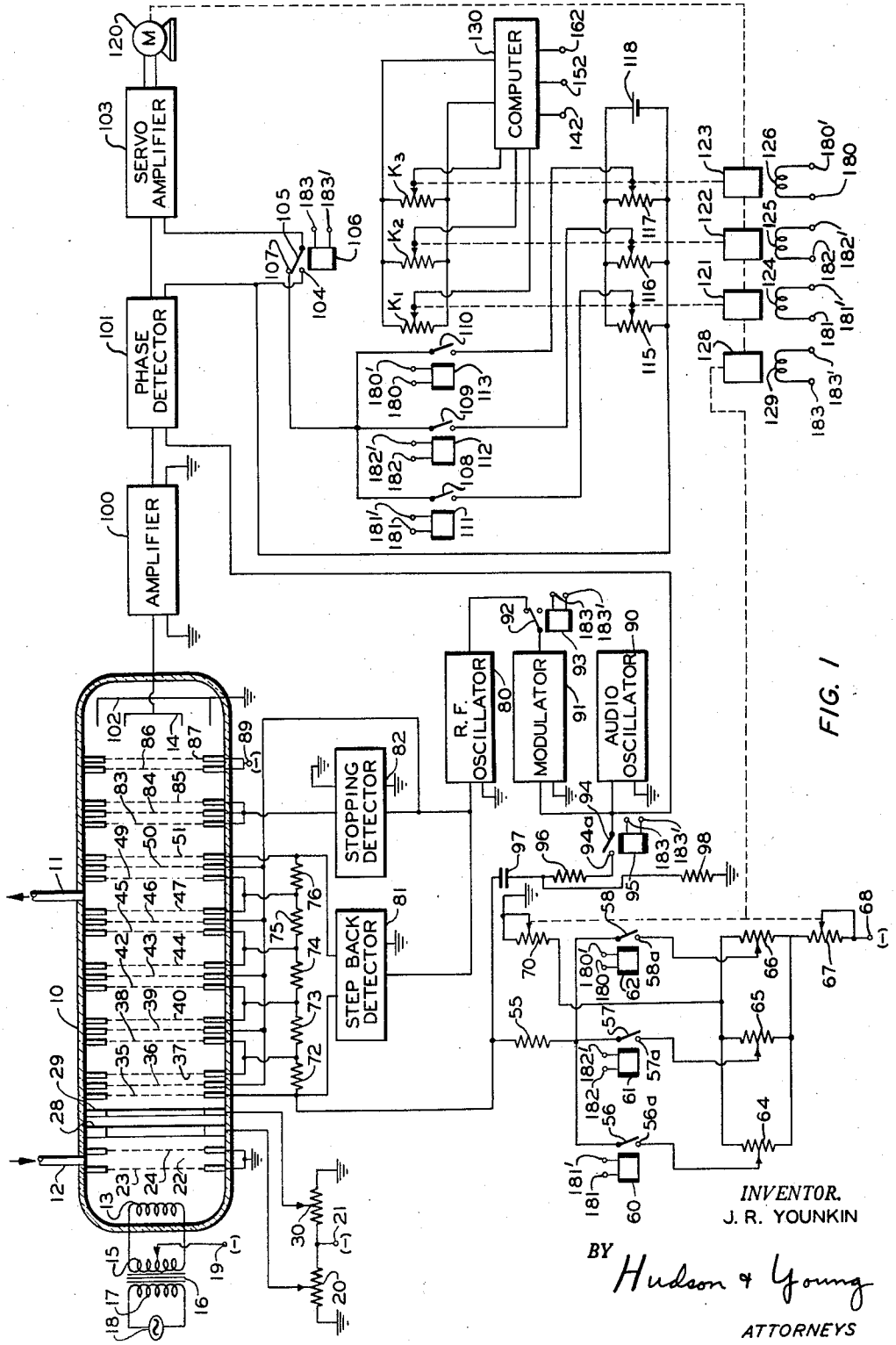

FIG. 1

INVENTOR.
J. R. YOUNKIN

BY Hudson & Young

ATTORNEYS

Sept. 22, 1959 J. R. YOUNKIN 2,905,821

MASS SPECTROMETRY

Filed Oct. 31, 1955 3 Sheets-Sheet 2

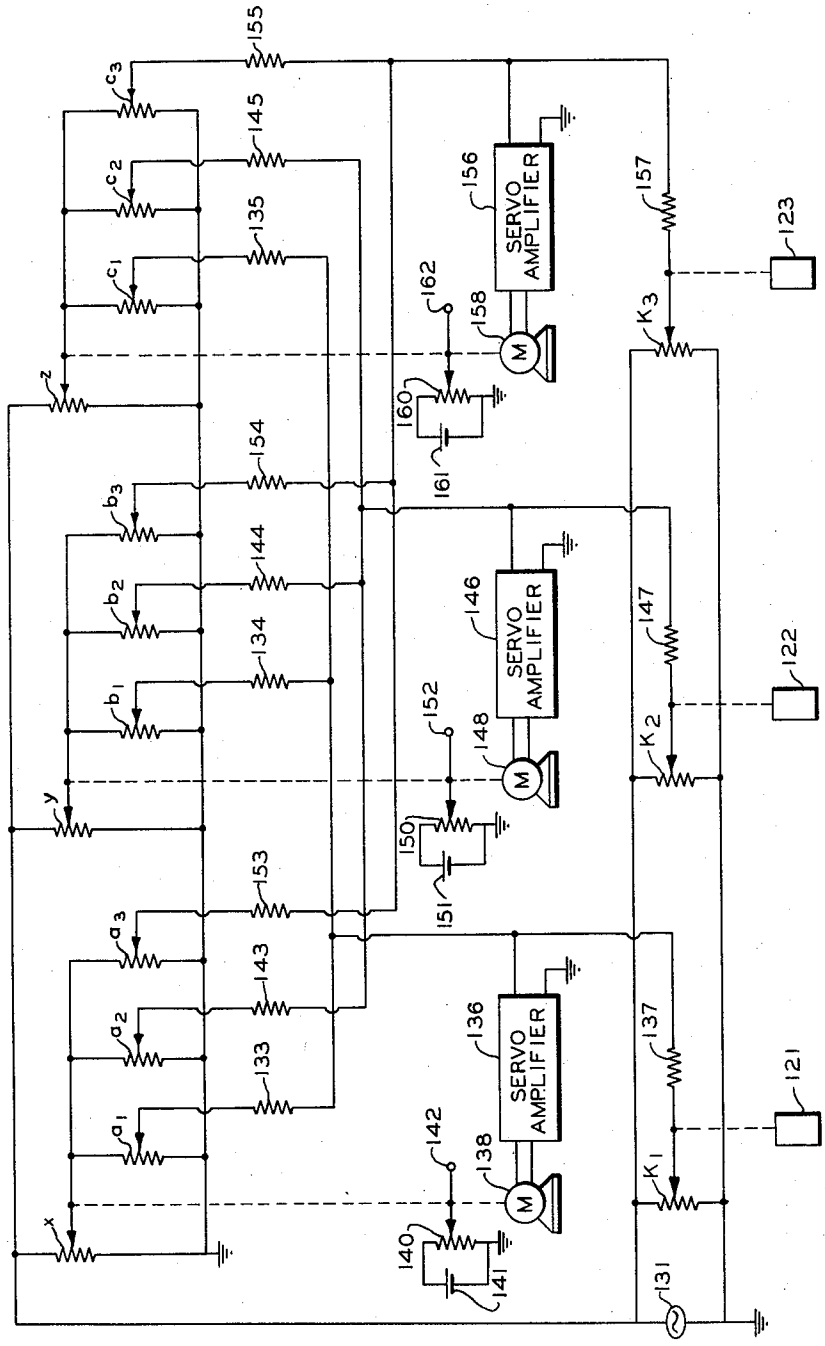

FIG. 2

INVENTOR.
J. R. YOUNKIN

BY Hudson & Young

ATTORNEYS

Sept. 22, 1959 J. R. YOUNKIN 2,905,821

MASS SPECTROMETRY

Filed Oct. 31, 1955 3 Sheets-Sheet 3

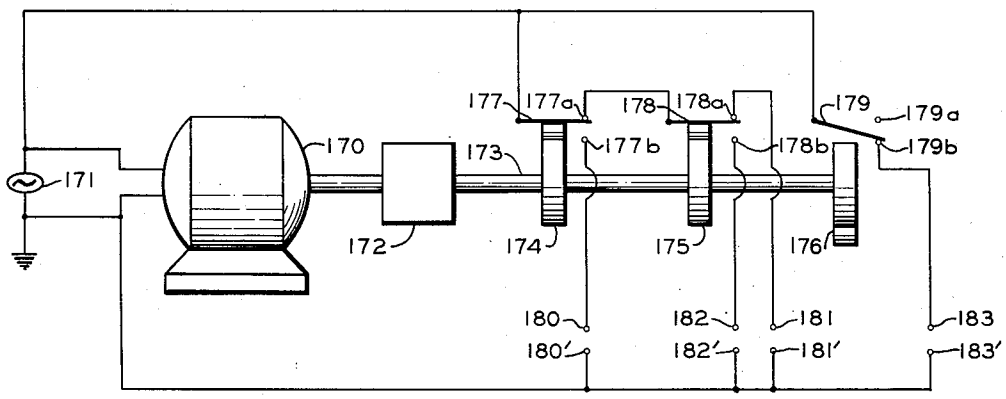

FIG. 3

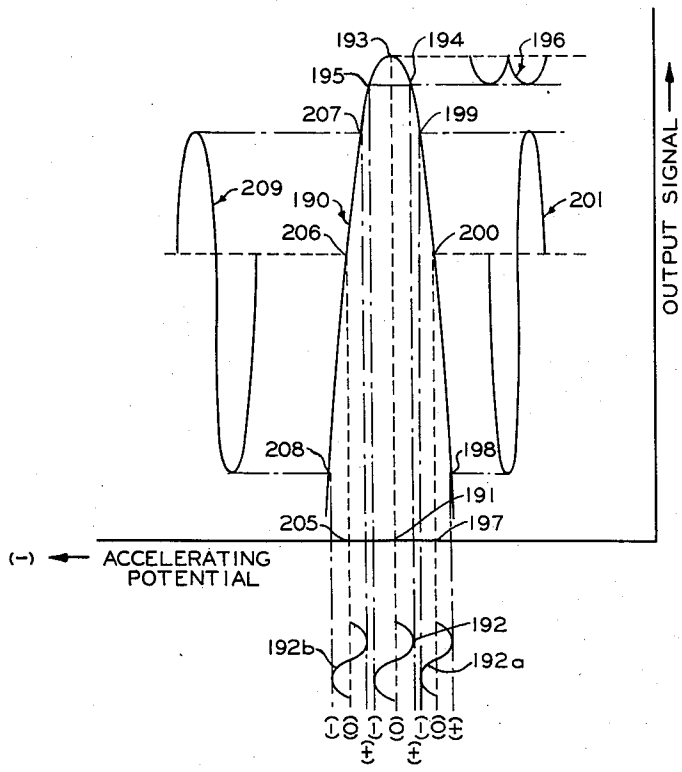

FIG. 4

INVENTOR.
J. R. YOUNKIN

BY Hudson & Young

ATTORNEYS

United States Patent Office 2,905,821 Patented Sept. 22, 1959

2,905,821

MASS SPECTROMETRY

James R. Younkin, Fayetteville, Ark., assignor to Phillips Petroleum Company, a corporation of Delaware

Application October 31, 1955, Serial No. 543,760

15 Claims. (Cl. 250—41.9)

This invention relates to the analysis of materials by the principles of mass spectrometry.

In recent years mass spectrometers have been developed from highly specialized academic research instruments for measuring the relative abundance of isotopes into analytical tools of extreme sensitivity and accuracy. At the present time, applications are being found for the use of mass spectrometers in process monitoring and control. Mass spectrometry comprises, in general, ionizing a sample of material under investigation and separating the resulting ions according to their masses to determine the relative abundance of ions of selected masses. The material to be analyzed usually is provided as a gas which is bombarded by a stream of electrons to produce the desired ions. Although both positive and negative ions may be formed by such electrical bombardment, most mass spectrometers make use of only the positive ions. These positive ions are accelerated out of the region of the electron beam by means of negative potentials. Such potentials impart equal kinetic energies to ions having like charges such that ions of different masses have different velocities after passing through the electrical field and, consequently, have different momenta. The presently known mass spectrometers can be classified in one of two general groups: the momentum selection types and the velocity or energy selection types. The momentum selection instruments sort the ions into beams of different masses by the use of magnetic and/or electrical deflecting fields. Ions of selected masses are allowed to impinge upon a collector plate to which is connected an indicating circuit. The velocity or energy selection instruments sort the ions according to the velocities or energies imparted to ions of selected masses by electrical accelerating fields.

When certain gases are subjected to electron bombardment, ionized particles of several masses may be formed. For example, ethane, which has a mass of 30, ionizes to form charged particles of masses 26, 27, 28, 29 and 30. Particles of mass 28 are the most abundant. Other gases of molecular weight approximately the same as that of ethane ionize to form particles of the same mass as those formed from ethane. For example, ethylene ionizes to form some particles of mass 26. This phenomenon obviously increases the difficulties of analyzing gaseous mixtures by mass spectrometry because individual masses are not representative of a single constituent. However, the concentrations of the constituents of a mixture can be calculated by measuring the ion concentrations at a plurality of mass numbers and solving a set of simultaneous linear equations.

In accordance with the present invention apparatus is provided to measure ion concentrations at a plurality of mass numbers and to transform the measurements into a set of simultaneous linear equations. A computer is provided which solves these equations automatically to provide output signals representative of the concentrations of the constituents in the mixture being analyzed.

The apparatus is controlled by timing mechanism which sequentially focuses the mass spectrometer to detect ions of selected mass numbers. The measured ion concentrations at these mass numbers are applied as input signals to the computer.

Accordingly, it is an object of this invention to provide apparatus to measure the concentrations of the constituents of a mixture by the principles of mass spectrometry.

Another object is to provide a linear simultaneous equation computer which is actuated by the output signals of a mass spectrometer.

A further object is to provide a mass spectrometer and a linear simultaneous equation computer and timing mechanism to control the operation of the spectrometer and computer.

A further object is to provide a mass spectrometer having automatic focusing means.

Other objects, advantages and features of the invention should become apparent from the following detailed description, taken in conjunction with the accompanying drawing in which:

Figure 1 is a schematic circuit drawing of a preferred embodiment of the mass spectrometer and computer of this invention;

Figure 2 is a schematic circuit drawing of the computer of Figure 1;

Figure 3 is a schematic view of the timing mechanism which controls the operation of the apparatus of Figure 1; and

Figure 4 is a diagrammatic representation of an operating feature of the mass spectrometer peak selector.

Referring now to the drawing in detail and to Figure 1 in particular, there is shown a mass spectrometer tube comprising a gas impermeable envelope **10**, the interior of which is maintained at a reduced pressure by a vacuum pump, not shown, which communicates with the interior of envelope **10** through a conduit **11**. A sample of gas to be analyzed is supplied to envelope **10** through a conduit **12**. An electron emitting filament **13** is disposed in one end of envelope **10** and an ion collector plate **14** is disposed in the other end of the envelope. Filament **13** is connected to the secondary winding **15** of a transformer **16**. A current source **18** is connected to primary winding **17**. The center top of winding **15** is connected to a negative terminal **19**. The gas sample supplied through conduit **12** is directed into an ionization chamber **22** which is defined by a pair of spaced grids **23** and **24** that are maintained at ground potential. Electrons emitted from filament **13** are accelerated into chamber **22** by the potential difference between filament **13** and grids **23** and **24**. These electrons bombard the gas molecules to form positive ions.

A first collimating electrode **28** is positioned on the second side of ionization chamber **22** and is connected to the contactor of a potentiometer **20**. One end terminal of potentiometer **20** is connected to a negative potential terminal **21**, and the second end terminal is connected to ground. A second collimating electrode **29** is spaced from electrode **28**. Electrode **29** is connected to the contactor of a potentiometer **30**. The end terminals of potentiometer **30** are connected to terminal **21** and ground, respectively.

The positive ions produced in chamber **22** are accelerated by the negative potentials applied to electrodes **28** and **29** so as to travel through tube **10** toward collector plate **14**. A first set of three equally spaced grids **35, 36** and **37** is positioned in tube **10** between grid **29** and collector plate **14**. A second set of three equally spaced grids **38, 39** and **40** is positioned in spaced relation with the first set of grids. A third set of equally spaced grids **42, 43** and **44** is positioned in spaced relationship with

the second set of grids. A fourth set of equally spaced grids **45**, **46** and **47** is positioned in spaced relationship with the third set of grids. A fifth set of spaced grids **49**, **50** and **51** is positioned in spaced relationship with the fourth set of grids.

In the mass spectrometer tube of Figure 1, the spacings *s* between grids **35** and **36**, **36** and **37**, **38** and **39**, **39** and **40**, **42** and **43**, **43** and **44**, **45** and **46**, **46** and **47**, **49** and **50**, and **50** and **51** are maintained equal. The spacings *r* between the centers of grids **37** and **38**, **40** and **42**, **44** and **45**, and **47** and **49** can be represented by the expression:

$$r=2s\left(\frac{n}{0.742}-1\right)$$

where *n* is an integral number, all dimensions being in inches. In one embodiment of this invention, *s* was 0.118 inch and the four *n*'s, proceeding from filament **13** to collector plate **14**, were five, nine, four and seven, respectively.

Grid **35** is connected through a resistor **55** to switches **56**, **57** and **58** which are actuated by respective relay coils **60**, **61** and **62**. Switches **56**, **57** and **58** engage respective terminals **56***a*, **57***a* and **58***a* when closed. Terminals **56***a*, **57***a* and **58***a* are connected to the contactors of respective potentiometers **64**, **65** and **66**. Corresponding first end terminals of potentiometers **64**, **65** and **66** are connected through a variable resistor **67** to a negative potential terminal **68**. Corresponding second terminals of potentiometers **64**, **65** and **66** are connected through a variable resistor **70** to ground.

Five resistors **72**, **73**, **74**, **75** and **76** are connected in series relationship between grids **35** and **51**. The junction between resistors **72** and **73** is connected to grids **37** and **38**. The junction between resistors **73** and **74** is connected to grids **40** and **42**. The junction between resistors **74** and **75** is connected to grids **44** and **45**. The junction between resistors **75** and **76** is connected to grids **47** and **49**.

An oscillator **80** is provided to generate electrical signals of a radio frequency. The first output terminal of oscillator **80** is connected to the first input terminal of a feedback detector circuit **81**. The second output terminal of oscillator **80** and the second input terminal of detector circuit **81** are also connected to ground. The output terminals of detector circuit **81** are connected to grids **35** and **51**, respectively. The first output terminal of oscillator **80** is also connected to the first input terminal of a stopping detector circuit **82**. The first output terminal of detector circuit **82** is connected to three spaced grids **83**, **84** and **85** which are positioned in tube **10** between grid **51** and collector plate **14**. The second input terminal and the second output terminal of the output circuit **82** are connected to ground. A pair of spaced grids **86** and **87** are positioned in tube **10** between grid **85** and collector plate **14**. These last two grids are connected to a negative potential terminal **89**.

A second oscillator **90** is provided to generate electrical signals of a frequency lower than the frequency of oscillator **80**. The frequency of oscillator **90** preferably is in the audio range. The first output terminal of oscillator **90** is connected to the first input terminal of a modulator circuit **91**. The first output terminal of modulator circuit **91** is connected through a switch **92** to oscillator **80** so that the output of oscillator **80** is modulated by the output of oscillator **90** when switch **92** is closed. Switch **92** is closed when a relay coil **93** is not energized. The second output terminal and the second input terminal of modulator circuit **91** are connected to ground. The first output terminal of oscillator **90** is also connected to a switch **94** which closes to engage a contact **94***a* when a relay coil **95** is energized. Contact **94***a* is connected through a resistor **96** and a capacitor **97** to grid **35**. The junction between resistor **96** and capacitor **97** is connected through a resistor **98** to ground.

Collector plate **14** is connected to the first input terminal of an amplifier **100** which is tuned to pass frequencies of the frequency of oscillator **90**. The first ouput terminal of amplifier **100** is connected to the first input terminal of a phase detector circuit **101**. The second input terminal of phase detector **101** is connected to the first output terminal of oscillator **90**. The second input and output terminals of amplifier **100** are connected to ground.

The positive ions formed in chamber **22** are accelerated toward collector plate **14** by the negative potential applied to electrodes **28** and **29**. During one half cycle of the output signal from oscillator **80**, the electrical field between grids **35** and **36** is of such phase that ions entering this field are accelerated. Ions which enter this field during a particular phase of the half cycle receive maximum energy. During the following half cycle of the signal from oscillator **80**, the field between grids **36** and **37** is of the same phase such that the ions are further accelerated. These ions then drift through the field-free space between grids **37** and **38**. The masses of the individual ions determine their times of arrival at grid **38**. The ions which arrive at grid **38** at the proper time are again accelerated by the field produced from the signal of oscillator **80** so as to receive maximum energy. The same accelerating procedure continues as the ions pass through the next ten grids in tube **10**. The first output terminal of detector circuit **82** provides a positive potential which is adjusted so that only those ions which receive a predetermined maximum energy are able to pass through positive grids **83**, **84** and **85** to impinge upon collector plate **14**. The ions impinging upon collector plate **14** cause current to flow in the input circuit of amplifier **100**. This current, which is proportional in magnitude to the number of ions impinging upon the collector plate per unit time, is amplitude modulated by the signal from oscillator **90** if switch **92** is closed. It is this modulated component of the current which is measured by phase detector **101**. The D.C. voltage from feedback detector **81** is applied to the potential dividing network comprising resistors **72**, **73**, **74**, **75** and **76** to decelerate the ions so that the velocity of the selected ions remains substantially constant. This prevents the desired ions from drifting out of phase with the accelerating potentials.

Grids **86** and **87** are connected to negative potential terminal **89** to suppress secondary electrons which may result from ions impinging upon metal parts in the tube. A grounded shield **102** is positioned adjacent collector plate **14**. Circuits particularly useful in the operation of the tube thus far described are shown in the copending application of Karasek and Burk, Serial No. 480,698, filed January 10, 1955, now U.S. Patent number 2,761,974.

The first output terminal of phase detector **101** is connected to the first input terminal of a servo amplifier **103**. The second output terminal of phase detector **101** is connected to a terminal **104** which is engaged by a switch **105** when a relay coil **106** is energized. Switch **105** is connected to the second input terminal of amplifier **103** and engages a terminal **107** in the absence of relay coil **106** being energized. Terminal **107** is connected to switches **108**, **109** and **110** which are closed by respective relay coils **111**, **112** and **113** being energized. The closed contacts of switches **108**, **109** and **110** are connected to the contactors of respective potentiometers **115**, **116** and **117**. A voltage source **118** is connected across the end terminals of each of potentiometers **115**, **116** and **117**. The output terminals of servo amplifier **103** are connected to a reversible servo motor **120**. The drive shaft of motor **120** is connected through magnetic clutches **121**, **122** and **123** to the contactors of respective potentiometers **115**, **116** and **117**. Clutches **121**, **122** and **123** are actuated by respective coils **124**, **125** and **126** being energized. The drive shaft of motor **120** is also connected through a magnetic clutch **128** to the arms

of variable resistors **67** and **70**. Clutch **128** is actuated by a coil **129** being energized. Rotation of motor **120** in a first direction increases the resistance of resistor **67** and decreases the resistance of resistor **70**. Rotation of motor **120** in a second direction increases the resistance of resistor **70** and decreases the resistance of resistor **67**. In this manner the total resistance between terminal **68** and ground is maintained constant.

The contactors of potentiometers **115**, **116** and **117** are mechanically coupled to the contactors of respective potentiometers K_1, K_2 and K_3. These potentiometers are connected to a computer circuit **130** which is illustrated in Figure 2. A source **131** of alternating voltage is applied across the end terminals of potentiometers K_1, K_2 and K_3. The first terminal of voltage source **131** is also connected to the first end terminals of potentiometers x, y and z. The second end terminals of potentiometers x, y and z and the second terminal of voltage source **131** are connected to ground. The contactor of potentiometer x is connected to the first end terminals of potentiometers a_1, a_2, and a_3. The second end terminals of these potentiometers are connected to ground. The contactor of potentiometer y is connected to the first end terminals of potentiometers b_1, b_2 and b_3. The second end terminals of these potentiometers are connected to ground. The contactor of potentiometer z is connected to first end terminals of potentiometers c_1, c_2 and c_3. The second end terminals of these potentiometers are connected to ground.

The contactors of potentiometers a_1, b_1 and c_1 are connected through respective resistors **133**, **134** and **135** to the first input terminal of a servo amplifier **136**. The first input terminal of amplifier **136** is also connected through a resistor **137** to the contactor of potentiometer K_1. The second input terminal of amplifier **136** is connected to ground. The output terminals of amplifier **136** are connected to a servo motor **138** which has the drive shaft thereof connected to the contactor of potentiometer x. The drive shaft of motor **138** is also connected to the contactor of the telemetering potentiometer **140**. A voltage source **141** is connected across the end terminals of potentiometer **140**, and an output terminal **142** is connected to the contactor thereof.

The contactors of potentiometers a_2, b_2 and c_2 are connected through respective resistors **143**, **144** and **145** to the first input terminal of a servo amplifier **146**. The first input terminal of amplifier **146** is also connected through a resistor **147** to the contactor of potentiometer K_2. The second input terminal of amplifier **146** is connected to ground. The output terminals of amplifier **146** are connected to a reversible servo motor **148** which has the drive shaft thereof connected to the contactor of potentiometer y. The drive shaft of motor **148** is also connected to the contactor of a telemetering potentiometer **150**. A voltage source **151** is connected across the end terminals of potentiometer **150**, and an output terminal **152** is connected to the contactor thereof.

The contactors of potentiometers a_3, b_3 and c_3 are connected through respective resistors **153**, **154**, and **155** to the first input terminal of a servo amplifier **156**. The first input terminal of amplifier **156** is also connected through a resistor **157** to the contactor of potentiometer K_3. The second input terminal of amplifier **156** is connected to ground. The output terminals of amplifier **156** are connected to a reversible servo motor **158** which has the drive shaft thereof connected to the contactor of potentiometer z. The drive shaft of motor **158** is also connected to the contactor of a telemetering potentiometer **160**. A voltage source **161** is connected across the end terminals of potentiometer **160**, and an output terminal **162** is connected to the contactor thereof.

The various relay coils and solenoids shown in Figure 1 are energized by the timing mechanism of Figure 3. A synchronous motor **170** is energized from a source of

alternating current **171**. The drive shaft of motor **170** is connected through a gear box **172** to rotate a shaft **173** at a predetermined angular velocity. Shaft **173** supports three cams **174**, **175** and **176**. Switch arms **177**, **178**, and **179** are positioned adjacent respective cams **174**, **175** and **176** so as to be moved by rotation of these cams. Switch arms **177**, **178** and **179** engage respective contacts **177***a*, **178***a* and **179***a* when in respective "up" positions and engage contacts **177***b*, **178***b* and **179***b* when in respective "down" positions. Switch arms **177** and **179** are connected to the first terminal of current source **171**. Switch arm **178** is connected to contact **177***a*. Contacts **177***b*, **178***a*, **178***b*, and **179***b* are connected to respective terminals **180**, **181**, **182** and **183**. Terminals **180'**, **181'**, **182'** and **183'** are connected to the grounded second terminal of current source **171**.

Terminals **181** and **181'** are connected to relay coils **60** and **111** and to solenoid coil **124**, all shown in Figure 1. Terminals **182** and **182'** are connected to relay coils **61** and **112** and to coil **125**. Terminals **180** and **180'** are connected to relay coils **62** and **113** and to coil **126**. Terminals **183** and **183'** are connected to relay coils **93**, **95** and **106** and to coil **129**. In one particular embodiment of this invention, the cams of the timing mechanism are selected so that switch arm **177** engages terminal **177***a* during the first 240° of rotation of shaft **173**. Switch arm **178** engages contact **178***a* during the first 120° of rotation. Switch arm **179** engages contact **179***a* during the time that shaft **173** is rotating from 60° to 120°, 180° to 240° and 300° to 360°.

In order to describe the operation of the apparatus of this invention, reference is made to a particular analysis of a hydrocarbon mixture comprising methane, ethane and ethylene. These three materials have respective masses of 16, 30 and 26. Analysis of this type involves solving a set of simultaneous equations of the following form:

$$a_1x+b_1y+c_1z=K_1$$
$$a_2x+b_2y+c_2z=K_2$$
$$a_3x+b_3y+c_3z=K_3$$

In these equations the values x, y and z represent the percentages of methane, ethane and ethylene, respectively in an unknown sample. The values K_1, K_2 and K_3 represent the mass spectrometer output signals at respective masses 16, 30 and 26. The a, b and c values represent the sensitivity of the mass spectrometer at the respective mass numbers. The instrument is calibrated initially by directing a pure sample of methane into the ionization chamber of tube **10** and focusing the tube sequentially to measure the ions of respective masses 16, 30 and 26. This is accomplished by closing respective switches **56**, **57** and **58** in sequence and adjusting respective potentiometers **64**, **65** and **66** to focus ions of respective masses 16, 30 and 26. At this time switch **92** is closed and switch **94** is open. The amplitudes of the output signal from phase detector **101** is measured by an indicating instrument, not shown, and these values for the three mass numbers are set on respective potentiometers a_1, b_1 and c_1. The same procedure is repeated with ethane being directed into the ionization chamber. The output signals observed with the mass spectrometer focused on masses 16, 30 and 26 are set on respective potentiometers a_2, b_2 and c_2. The procedure is again repeated with ethylene being directed into the ionization chamber to obtain settings for potentiometers a_3, b_3 and c_3. The instrument is then adjusted to analyze a mixture containing these three gases.

During the first 60° of rotation of shaft **173** switch arm **179** engages contact **179***b* so that current flows through the coils connected between terminals **183** and **183'**. At the same time current flows through the coils connected between terminals **181** and **181'**. With reference to Figure 1, it can be seen that switch **92** is open, switch **94** is closed, switch **56** is closed and switch **105** engages termi-

nal **104**. This results in the output signal from oscillator **90** being superimposed upon grid **35** of tube **10**. The ion flow through tube **10** is thus modulated at the frequency of oscillator **90** so that the signal applied through amplifier **100** to phase detector **101** is of this frequency. The output signal from the amplifier **100** is compared with the output signal from oscillator **90**. Phase detector **101** can advantageously be of the form illustrated in the copending application of M. C. Burk, Serial No. 431,805, filed May 24, 1954, now U.S. Patent Number 2,778,945. This phase detector comprises a pair of triodes connected in parallel relationship and having a potentiometer between the cathodes thereof. The anodes of the two triodes are connected through a potential source to a center tap on the potentiometer. The mass spectrometer output signal is aplied to the primary winding of a transformer. The end terminals of the secondary winding are connected to the respective control grids. The output signal of the audio oscillator is applied to the center tap of the transformer secondary. Filters are incorporated in the cathode circuits of the two tubes to provide a D.C. output signal. The polarity of the output signal is determined by the relative amplitudes of the two signals being compared.

The operation of phase detector **101** can be explained in conjunction with Figure 4. Curve **190** represents the relationship between the D.C. output signal of the mass spectrometer tube and the accelerating potential applied to grids **35**, **37**, **38**, **40**, **42**, **44**, **45**, **47**, **49** and **51**. The output signal is the current flow in the input circuit of amplifier **100**. For a given mass number there exists a D.C. accelerating potential which provides a maximum output signal. For example, if the accelerating potential is at the value represented by numeral **191**, curve **190** has a peak at point **193**. If the output of oscillator **90** is superimposed on the D.C. accelerating potential, the resulting accelerating potential varies periodically from the value represented by numeral **191**. This is represented in Figure 4 by curve **192** being superimposed upon the D.C. accelerating potential. This results in the accelerating potential varying periodically from values represented by numerals **194** and **195**. Under this condition the output signal is of the form illustrated by curve **196**. This signal is essentially of a frequency twice the frequency of oscillator **90** and as such is not passed by tuned amplifier **100**. The measured output signal of the mass spectrometer is thus a minimum and does not energize motor **120**.

If the D.C. accelerating potential should vary in a positive direction to a point such as **197**, the output signal is of the form shown by curve **201**. This results from the signal of oscillator **90**, which is represented by curve **192***a*, being superimposed upon the D.C. accelerating potential. Curve **201** varies in amplitude from values represented by numerals **198** and **199**. If the accelerating potential should vary in a negative direction to a point such as **205**, the output signal is of the form shown by curve **209**. This results from the signal from oscillator **90**, which is represented by curve **192***b*, being superimposed upon the D.C. accelerating potential. Curve **209** varies in amplitude from values represented at **207** and **208**. It can be seen that curves **201** and **209** are of the same frequency as oscillator **90** and are 180° out of phase with one another. When a signal represented by curve **201** is applied to the input of phase detector **101**, motor **120** rotates in a first direction. When a signal represented by curve **209** is applied to the input of phase detector **101**, motor **120** rotates in a second direction. The drive shaft of motor **120** is connected through clutch **128** to adjust variable resistors **67** and **70**. The direction and degree of adjustment is sufficient to restore the D.C. accelerating potential to the desired peak value represented by point **193** in Figure 4. This operation is referred to as "peak seeking" and adjusts the spectrometer tube to provide a signal representative of the selected mass number which is set on the corresponding potentiometers **64**, **65** or **66**. During the first 60 degrees of rotation of shaft **173** the accelerating potential is adjusted so that the tube monitors mass **16**.

During the following 60° of rotation of shaft **173**, switch arm **179** engages contact **179***a* so that the coils connected between terminals **183** and **183'** are deenergized. This removes the output signal from oscillator **90** from the accelerating grids of tube **10**. Clutch **179** is also deenergized at this time, as is relay **106** so that switch arm **105** engages contact **107**. Relay **111** remains energized so that potentiometer **115** is connected in the input circuit of amplifier **103**. Clutch **121** remains actuated so that motor **120** adjusts potentiometers **115** and K_1. Under this condition the output signal from mass spectrometer tube **10** is compared with the voltage drop across potentiometer **115** and motor **120** is rotated in the proper direction to eliminate a difference between the compared potentials. Potentiometer **115** establishes a reference potential for balance purposes. Rotation of motor **120** also results in the contactor of potentiometer K_1 being set at a value representing the output signal of the mass spectrometer tube **10** for ions having a mass of 16.

During the next 120° of rotation of shaft **173** the previously described operation repeats except that the spectrometer tube is focused at mass 30 by having potentiometer **65** connected in circuit therewith. Potentiometer K_2 is adjusted in accordance wtih the output signal representative of this mass number. During the last 120° of rotation of shaft **173** the operation repeats except that the tube is focused on mass **26** and potentiometer K_3 is adjusted.

The foregoing operation results in the computer circuit of Figure 2 being set to solve a set of three simultaneous linear equations. The voltages appearing across potentiometers *x*, *y* and *z* and multiplied by the respective settings of the *a*, *b* and *c* potentiometers connected in cascade therewith. These summed voltages are applied to the inputs of the servo amplifiers for each respective equation. The summed voltages are compared with the voltages across the K potentiometers and the servomotors energized until the compared potentials are equal. This results in potentiometers *x*, *y* and *z* being set at values representing the percentages of the three components of the mixture being analyzed. If it is desired to provide output electrical signals representing these potentiometer settings, potentiometers **140**, **150** and **160** are employed. The voltages at terminals **142**, **152** and **162**, with respect to ground, represent the percentages of the three components in the mixture being analyzed.

The reason that *x*, *y* and *z* are solved for by this apparatus is mathematically explained in the "Classical Iterative Method" or "Gauss-Siedel Method," as described briefly in the "Oil and Gas Journal," vol. 43, "Time-Saving Computing Instruments," by Morgan and Crawford, August 26, 1944, pp. 100, 102, and 105. This technique involves making arbitrary assumptions for two of the three terms *x*, *y*, or *z*, (e.g., *y* and *z*) and solving the equation for K_1 for the third of them (e.g., *x*). This value of *x* is then used with an assumed value of *z* to solve the equation for K_2 for *y*. Then, both of the solved for values of *x* and *y* are used to solve for *z* in the relation for K_3. Errors, if any, are evidenced by different values in the assumed and solution values of *x*, *y* and *z*. This being an arbitrary technique, any errors, in the initial assumptions of values are resolved by using the computed values of *y* and *z* to solve for *x* again, and then repeating the foregoing steps until the error, if any, is reduced to a tolerable degree. Repetition converges the equations on their solution.

An electrical analogy to the foregoing mathematical operations is embodied in the operating characteristics of the circuit in Figure 2. The calibration of the circuit, as explained above with respect to methane, ethane, and

ethylene, serves to set in the proper values of *a*, *b*, and *c*. The value of K_1, K_2 and K_3 are initially assumed and set on the corresponding potentiometers. After the first solution, of course, these values are those arrived at in said first solutions. The foregoing mathematical steps then are electrically repeated, i.e., when K_1 is set in by the timing device of Figure 3 servomotor **138** adjusts *x* to bring the servo circuit to a null. This step is equivalent to solving for *x* with assumed values of *y* and *z*. This value of *x* is only approximate, however, and when K_2 is set in and *y* is solved, the null of the circuit for *x* is upset —the result is that potentiometers *x* and *y* then both simultaneously adjust and go to a null, thus simultaneously solving for *x* and *y*. Similarly, when *z* is solved for upon setting **123**, the approximations of *x* and *y* then repeat a null operation until *x*, *y*, and *z* are satisfied.

Note that the electrical method does something the mathematical method does not, viz., it simultaneously corrects for the initial "assumed values" of *y* and *z*, if necessary, during the second and third steps, i.e., during the solutions involving K_2 and K_3. The result is that when a value for *z* has finally been determined by the computer, the values of *x* and *y* have also been determined and it is not necessary to go through subsequent iterative steps, as in the mathematical method, to correct for errors in the initial selection of values for *y* and *z*.

It should be evident that the mass spectrometer and computer described herein is in no way limited to the analysis of a three component mixture. If a larger number of components are present, additional potentiometer networks are provided in both the focusing portion of the mass spectrometer and in the simultaneous equation computer. The speed of rotation of shaft **173** is adjusted to provide ample time for the spectrometer to focus on the selected mass peaks. The operation can be repeated at a desired frequency.

From the foregoing description it should be apparent that there is provided in accordance with this invention a system to focus a mass spectrometer sequentially on selected mass numbers and to energize a simultaneous equation computer in accordance wtih the output signals. While the invention has been described in conjunction with a present preferred embodiment, it should be apparent that it is not limited thereto.

What is claimed is:

1. Apparatus to analyze a gaseous mixture comprising mass spectrometer means generating a plurality of signals seriatim each of which is a function of a like plurality of ions in said mixture, means responsive to said signals to provide constant outputs of amplitudes respresentative of said signals, and computer means responsive to said outputs to provide a like plurality of output signals respectively indicative of the amount of a gas in said mixture.

2. Apparatus to analyze a gaseous mixture comprising mass spectrometer means generating a plurality of signals seriatim each of which is a function of a like plurality of ions in said mixture, a like plurality of means each one of which is responsive to a corresponding one of said signals to provide a constant output of an amplitude representative of said corresponding one signal, and computer means responsive to said outputs to provide a like plurality of output signals respectively indicative of the amount of a gas in said mixture.

3. Apparatus to analyze a gaseous mixture comprising a mass spectrometer means generating a plurality of signals seriatim each of which signals is a function of the ions of ionizable constituent gases of said mixture that have the same mass number, a like plurality of means each of which means is responsive to one of said signals to provide a constant output of an amplitude representative of the corresponding one of said signals, and computer means responsive to said outputs to provide a like plurality of output signals respectively indicative of the amount of each constituent gas in said mixture.

4. Apparatus to analyze a mixture of a plurality of gases comprising mass spectrometer means for generating a like plurality of signals seriatim each of which signals is a function of the ions of a preselected mass number of each of said gases, means responsive to said signals to provide constant outputs of ampltiudes representative of said signals, and computer means responsive to said outputs to provide a like plurality of output signals respectively indicative of the amount of each of said gases.

5. Apparatus to analyze a mixture of a plurality of gases comprising mass spectrometer means for generating a plurality of signals seriatim each of which signals is a function of a mass number of each of said gases, the ions of a preselected like plurality of means each of which is responsive to one of said signals to provide a constant output of an amplitude representative of the corresponding one of said signals, and computer means responsive to said outputs to provide a like plurality of output signals respectively indicative of the amount of each of said gases.

6. Apparatus to analyze a mixture to determine the amounts of the constituents thereof comprising a mass spectrometer; means to focus said mass spectrometer to detect sequentially ions of constituents of the mixture having like mass numbers; a simultaneous equation computer comprising a plurality of first potentiometers, a voltage source applied across the end terminals of said first potentiometers, a plurality of second potentiometers having the end terminals thereof connected across said voltage source, a plurality of groups of third potentiometers connected in cascade relationship with each of said second potentiometers, means to compare the sums of voltages between the contactors and first end terminals of corresponding third potentiometers in each of said groups with the voltage between the contactor and first end terminal of a corresponding one of said first potentiometers, and means responsive to each of said means to compare to adjust the contactor of the corresponding one of said second potentiometers; and means responsive to the output signals of said mass spectrometer to adjust the contactors of respective ones of said first potentiometers.

7. The combination in accordance with claim 6 wherein said mass spectrometer comprises a gas impermeable envelope enclosing means to ionize the material to be analyzed, a collector plate spaced from said means to ionize, a plurality of groups of grids spaced in a path between said means to ionize and said plate, each of said groups comprising three grids in spaced relation with one another, the spacings between adjacent grids being equal, the spacings between adjacent groups of said grids being substantially

$$2s\left(\frac{n}{0.742}-1\right)$$

where *n* is an integral number and *s* is the spacing between adjacent grids in each group, and a second grid positioned between said collector plate and said groups of grids; means applying a steady potential to the end grids in each of said groups of grids; means applying a potential to said second grid of polarity opposite the polarity of the ions being detected; a source of potential which fluctuates in amplitude at a first frequency applied to the center grid in each of said groups of grids; and means connected to said collector plate to detect ions impinging thereon.

8. The combination in accordance with claim 6 wherein said means to focus comprises means to vary the amplitude of said steady potential sequentially.

9. The combination in accordance with claim 8 wherein said means applying a steady potential comprises a plurality of potentiometers connected in parallel, a source of potential and a variable impedance element connected in series with said potentiometers, switching means connecting the contactors of said potentiometers selectively to the end grid of the one of said groups of grids adjacent said means to ionize, means to actuate said switching means periodically, and means responsive to said means connected to said collector plate to adjust said variable

impedance element until a maximum number of ions impinges upon said collector plate per unit time.

10. The combination in accordance with claim 9 wherein said last-mentioned means and said means connected to said collector plate comprise a second source of fluctuating potential of a second frequency, means applying said second source to the end grid of the one of said groups of grids adjacent said means to ionize, an amplifier tuned to pass signals of said second frequency, the input of said amplifier being connected to said collector plate, a phase detector having the inputs thereof connected to the output of said amplifier and to said second source, and means responsive to the output of said phase detector to adjust said impedance element.

11. The combination in accordance with claim 6 further comprising a plurality of fourth potentiometers, means applying voltages across the end terminals of said fourth potentiometers, and means mechanically connecting the contactors of said fourth potentiometers to the contactors of respective ones of said second potentiometers, whereby the voltages between the contactors and respective first end terminals of said fourth potentiometers represent the amounts of the constituents of the mixture to be analyzed.

12. The combination in accordance with claim 6 wherein the means responsive to the output signals from said mass spectrometer to said computer comprises a reversible motor, means to rotate said motor representative of the output signals of said mass spectrometer and clutch means to connect the drive shaft of said motor sequentially to the contactors of said first potentiometers.

13. A mass spectrometer comprising a gas impermeable envelope enclosing means to ionize the material to be analyzed, a collector plate spaced from said means to ionize, a plurality of groups of grids spaced in a path between said means to ionize and said plate, each of said groups comprising three grids in spaced relation with one another, the spacings between adjacent grids being equal, the spacings between adjacent groups of said grids being substantially

$$2s\left(\frac{n}{0.742}-1\right)$$

where n is an integral number and s is the spacing between adjacent grids in each group, and a second grid positioned between said collector plate and said groups of grids; means applying a steady potential to end grids in each of said groups of grids; means applying a potential to said second grid of polarity opposite the polarity of the ions being detected; a source of potential which fluctuates in amplitude at a first frequency applied to the center grid in each of said groups of grids; means superimposing a fluctuating potential of a second frequency on said steady potential; and phase sensitive means responsive to ion impingement on said collector plate at said second frequency to adjust the amplitude of said steady potential.

14. The combination in accordance with claim 13 wherein said phase sensitive means comprises an amplifier tuned to pass signals of said second frequency, means connecting said collector plate to the input of said amplifier, a phase detector actuated by the output of said amplifier and a fluctuating potential of said second frequency, a reversible motor, means responsive to rotation of said motor to adjust said steady potential, and means to energize said motor responsive to the output of said phase detector.

15. Apparatus to analyze a mixture to determine the amounts of the constituents thereof comprising a mass spectrometer; means to adjust said mass spectrometer periodically and in sequence to detect ions of selected masses formed by the mixture being ionized; a simultaneous equation computer comprising a plurality of networks, each of said networks including a first potentiometer, a plurality of second potentiometers having first end terminals thereof connected to the contactor of said first potentiometer, the second end terminals of said second potentiometers being connected to one end terminal of said first potentiometer, a third potentiometer, a servo motor, means connecting the drive shaft of said servo motor to the contactor of said first potentiometer, and means applying the potential between the contactor of said third potentiometer and one end terminal thereof to the input of said servo motor; a voltage source; means applying said voltage source across the end terminals of said first and third potentiometers in each of said networks; and means summing the potentials between said one end terminal of said first potentiometers and the contactors of corresponding ones of said second potentiometers in each of said networks and applying said summed potentials to the inputs of respective ones of said servo motors; and means responsive to the output signals of said mass spectrometer representative of said selected masses to adjust the contactors of respective ones of said third potentiometers.

References Cited in the file of this patent

UNITED STATES PATENTS

2,629,056	Goodwin	Feb. 17, 1953
2,683,811	Robinson	July 13, 1954
2,721,271	Bennett	Oct. 18, 1955
2,761,974	Burk et al.	Sept. 4, 1956
2,768,302	Bennett	Oct. 23, 1956
2,808,989	Youmkin	Oct. 8, 1957

OTHER REFERENCES

A Computer for Solving Linear Simultaneous Equations, Berry et al., Journal of Applied Physics, vol. 17, No. 4, April 1946, pp. 262–272.

UNITED STATES PATENT OFFICE

CERTIFICATE OF CORRECTION

Patent No. 2,905,821 September 22, 1959

James R. Younkin

It is hereby certified that error appears in the printed specification of the above numbered patent requiring correction and that the said Letters Patent should read as corrected below.

Column 10, line 12, strike out "a" and insert the same before "like" in line 13; lines 12 and 13, strike out "the ions of a preselected" and insert the same after "function of" in line 12, same column; line 63, for the claim reference numeral "6" read -- 7 --.

Signed and sealed this 7th day of June 1960.

(SEAL)
Attest:

KARL H. AXLINE
Attesting Officer

ROBERT C. WATSON
Commissioner of Patents