June 24, 1941. A. G. COOLEY 2,246,721

PHASING ARRANGEMENT FOR TELEFACSIMILE MACHINES

Filed Dec. 1. 1939

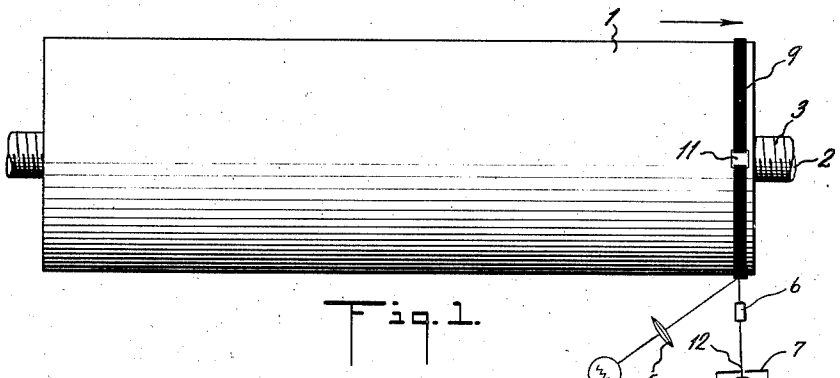

Fig. 1.

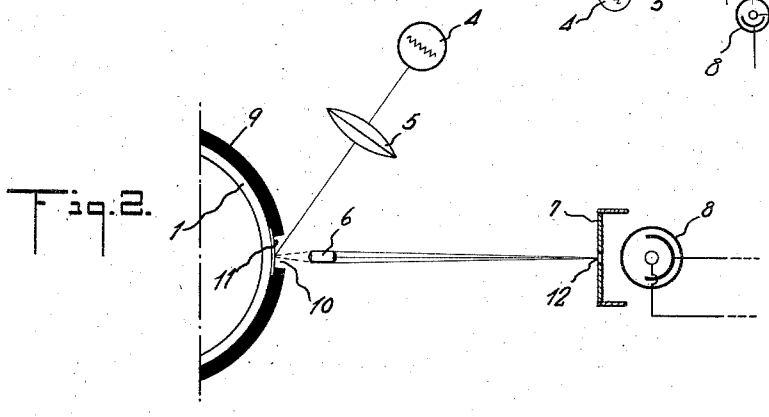

Fig. 2.

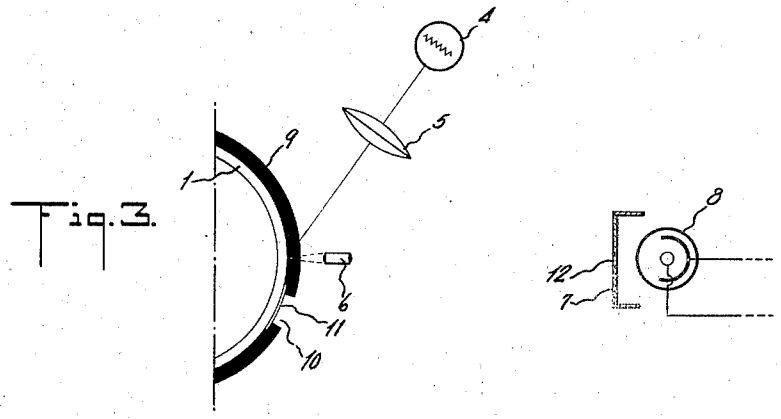

Fig. 3.

Austin G. Cooley

INVENTOR.

BY John J. Logan

ATTORNEY.

Patented June 24, 1941 2,246,721

UNITED STATES PATENT OFFICE

2,246,721

PHASING ARRANGEMENT FOR TELEFACSIMILE MACHINES

Austin G. Cooley, New York, N. Y., assignor to Wide World Photos, Inc., New York, N. Y., a corporation of New York

Application December 1, 1939, Serial No. 307,029

7 Claims. (Cl. 178—69.5)

This invention relates to phasing arrangements and more especially to phasing arrangements for remotely controlled devices such for example as tele-facsimile scanning devices and the like.

A principal object is to provide a novel electro-optical arrangement for producing a phasing-control impulse at a tele-facsimile scanner or the like.

A feature of the invention relates to an attachment for a tele-facsimile scanning drum to control the production of a special phasing impulse.

A further feature relates to a novel form of optical system for tele-facsimile scanners and the like.

A still further feature relates to the novel organization, arrangement and relative location of parts which cooperate to generate an improved timing impulse for tele-facsimile scanners and other remotely controlled devices.

Other features and advantages not specifically enumerated will be apparent after a consideration of the following detailed descriptions and the appended claims.

In certain types of signalling devices, for example tele-facsimile scanners, telegraph distributors and the like, it is necessary not only to insure that the transmitting and receiving mechanisms run in time synchronism, but also that, spacially considered, the devices be in correct spacial orientation with respect to each other. The procedure required to effect the orientation is referred to in the facsimile and telegraph arts as "phasing." Various forms of phasing arrangements are known in those arts, most of which require some sort of mechanical arrangement such as brushes, cams and the like for producing a special phasing impulse at a predetermined point during each revolution of the transmitting device. In accordance with one aspect of the present invention, the phasing signal is produced by electro-optical means which also acts as the usual electro-optical system for scanning the picture or other subject matter which is to be transmitted. Accordingly there is shown in the drawing one representative embodiment of the invention wherein,

Fig. 1 is a plan view of a tele-facsimile scanning drum and optical system embodying the invention.

Fig. 2 is a schematic diagram showing an end view of part of the drum of Fig. 1, and the associated electro-optical system according to the invention.

Fig. 3 is another view similar to Fig. 2, but showing the drum in a different position with respect to the optical system.

Referring to Fig. 1 of the drawing, there is shown a typical facsimile scanning drum 1 which may be of metal or other material and around which the picture or other subject matter to be transmitted is wrapped and suitably held as disclosed for example in Patent No. 2,145,072. The drum 1 is provided with a supporting shaft 2, which may be threaded to form a lead screw so that as the said shaft rotates, the drum 1 likewise rotates and for each revolution of the shaft the drum is advanced bodily in the direction of the arrow the width of a scanning line. For a detailed description of a typical drum assembly that can be used, reference may be had to U. S. Patent No. 2,138,784. A similar scanning drum and associated driving mechanism is provided at the remotely located receiving point, the transmitter and receiver drums being run in time synchronism by suitable electric motors controlled by synchronizing signals as well-known in the tele-facsimile art. As is well-known in that art, it is also necessary to maintain proper space synchronism or phasing between the drums, it being the usual practice to send the phasing signals prior to the transmission of the actual tele-facsimile signals so that once the transmitting and receiving drums have been phased, the tele-facsimile scanning of the subject matter can proceed without further adjustment. In accordance with the present invention, the phasing signal is derived by utilizing the same optical system as is used for scanning the subject matter to be transmitted which subject matter as above pointed out, is wrapped around drum 1.

Referring to Fig. 2, there is shown in diagrammatic form associated with drum 1, a steady scanning light source 4 which by means of a suitable lens system 5, illuminates the drum 1 in a comparatively small spot of intense light. It will be understood of course, that the light source 4 and lens system 5 are enclosed in suitable light-tight housings so as to confine the illumination of the drum to a relatively small spot. Also associated with the drum is another lens system 6 which collects the light reflected from the drum and projects it through the apertured mask 7 and thence on to the light sensitive or photo-electric cell 8 which may be of any well-known construction. It will be understood that the elements 6, 7 and 8, are enclosed in suitable housings so that substantially the only light which impinges on cell 8 is that which is reflected from the illuminated spot on drum 1 and which passes through the optical system 6. If desired however, the system may be so arranged that a small amount of steady leakage light may be allowed to enter cell 8 independently of drum 1 if it is desired to maintain a minimum current from the cell at all times.

In order to produce a "strong" or pronounced phasing impulse once for each revolution of drum 1, there is provided a split metal ring or band 9 adapted to be sprung over the drum adjacent

the forward end thereof. If desired, the ring 9 may be fastened to the drum by screws or the like. The ring 9 is slightly smaller in internal diameter than the external diameter of the drum so that a small gap 10 is left between the ring ends. Preferably, although not necessarily, the opposed ends of ring 9 are slightly undercut to receive a small insert 11 which may be of metal having its exposed surface painted white, or if desired it may be a piece of white Celluloid or film preferably of the same order of thickness as the thickness of the film carrying the subject matter wrapped around drum 1. The outer surface of ring 9 is blackened in any suitable manner.

In accordance with the invention, the lens system 6 is designed so that its conjugate foci are located respectively at the surface of member 11 and at the aperture 12 in member 7. Furthermore, ring 9 is chosen of such radial thickness that its outer peripheral surface is materially out of the focus of lens system 6 as shown diagrammatically in Fig. 3.

When the drum is in position to transmit a phasing impulse, member 11 is in optical alignment with system 6, and being white and at the focus of the said system, a maximum amount of light is projected through the aperture 12 on to cell 8, thus generating a large amplitude impulse or series of impulses. This phasing signal is transmitted to the receiving equipment and is utilized to control the automatic phasing mechanism thereof in any well-known manner, preferably in accordance with the disclosure of application Serial No. 306,465, filed November 28, 1939.

On the other hand, when the member 11 passes the optical system 6, member 9 is interposed and the illuminated spot being out of alignment with system 6, very little if any light is projected through the aperture 12 to cell 8. This condition is diagrammatically shown in Fig. 3.

Preferably, and as described in said Patent No. 2,138,784, the drum 1 is coupled to the lead screw 2 by a clutching arrangement whereby the drum can be constantly rotated without advancing it longitudinally. Consequently, during the phasing operation, prior to actual tele-facsimile transmission, the drum merely rotates at its scanning speed and once during every revolution a phasing impulse is transmitted. When the phasing has been accomplished as described in said application Serial No. 306,465, the attendant at the receiving station operates a switch to disconnect the phasing mechanism thereat and the transmitting and receiving machines are then in condition to be used for transmitting the facsimile signals representing the subject matter wrapped around the drum. During the transmission the subject matter is scanned in the well-known manner by the same optical system as shown in the drawing and which is used for the purpose of phasing, it being understood of course that the light-sensitive cell 8 is connected to a suitable amplifier and if desired both the phasing impulse and the tele-facsimile signals may be transmitted in the form of a modulated carrier current preferably in the audio frequency range.

Various changes and modifications may be made herein without departing from the spirit and scope of the invention. Thus the relative lengths of members 9 and 11 may be the opposite of that shown. Thus the white member 11 instead of being a small sector may extend around the major part of the drum, in that case member 9 will be a small sector equivalent in length to that of member 11 which is shown in Figs. 1, 2 and 3. This will produce a drop in signal to represent the phasing pulse.

What I claim is:

1. In combination, a rotatable scanning drum having the greater part of its peripheral surface of uniform diameter, said drum being provided with a peripheral blackened raised ridge having a substantially white localized portion intermediate the ends, a light source for illuminating said ridge with a scanning light spot, a lens system focussed substantially at the surface of said uniform diameter portion of the drum whereby the surface of said ridge is out of focus with said lens system, means to rotate said drum to bring said localized portion between the lens system and the light source, and a light-sensitive cell responding to the light passing through said lens system as reflected from said localized white portion.

2. In combination, a scanning drum to receive subject matter to be transmitted, an electro-optical system for scanning said subject matter to produce tele-facsimile signals including a lens system focussed substantially at the surface of said drum adjacent one end thereof, and means carried by said drum for effectively increasing the radial thickness thereof, said means having a black periphery, said means being in alignment with said optical system and having a localized white section of reduced radial thickness to control the production of a phasing impulse.

3. In combination, a rotatable scanning drum, a blackened raised ring surrounding said drum and having a substantially white gap intermediate its ends, a light source for projecting a light spot on said drum, means to rotate said drum so that said ring is illuminated by said light spot, a lens system focussed substantially at the surface of said drum, said ring being of sufficient thickness so that when it rotates between the said light source and the said lens system, the light spot is out of focus of the lens system, and a light-sensitive cell energized by the light passed through said lens system.

4. In combination, a scanning drum surrounded by a blackened raised ring having a gap intermediate its ends, and a light reflecting member disposed in said gap materially below the peripheral surface of said ring.

5. The combination according to claim 4 in which an electro-optical system including a lens and a light-sensitive cell is mounted adjacent the drum with the lens focussed on said light reflecting member and being materially out of focus with the outer peripheral surface of said ring.

6. The combination according to claim 4 in which said light reflecting member is white and the outer reflecting surface of said ring is blackened.

7. In combination, a rotatable scanning drum, an electro-optical system for projecting a scanning spot on to said drum and for translating the reflected light from said spot into electric currents, and means to produce a phasing impulse comprising a blackened ring surrounding said drum and adapted to be rotated between the light source and lens, said ring having a light reflecting gap intermediate its ends.

AUSTIN G. COOLEY.