March 18, 1930. H. E. WURZBACH ET AL 1,751,120

METHOD AND APPARATUS FOR SELECTING METAL CHECKS

Filed July 28, 1928 7 Sheets-Sheet 1

Fig. 1

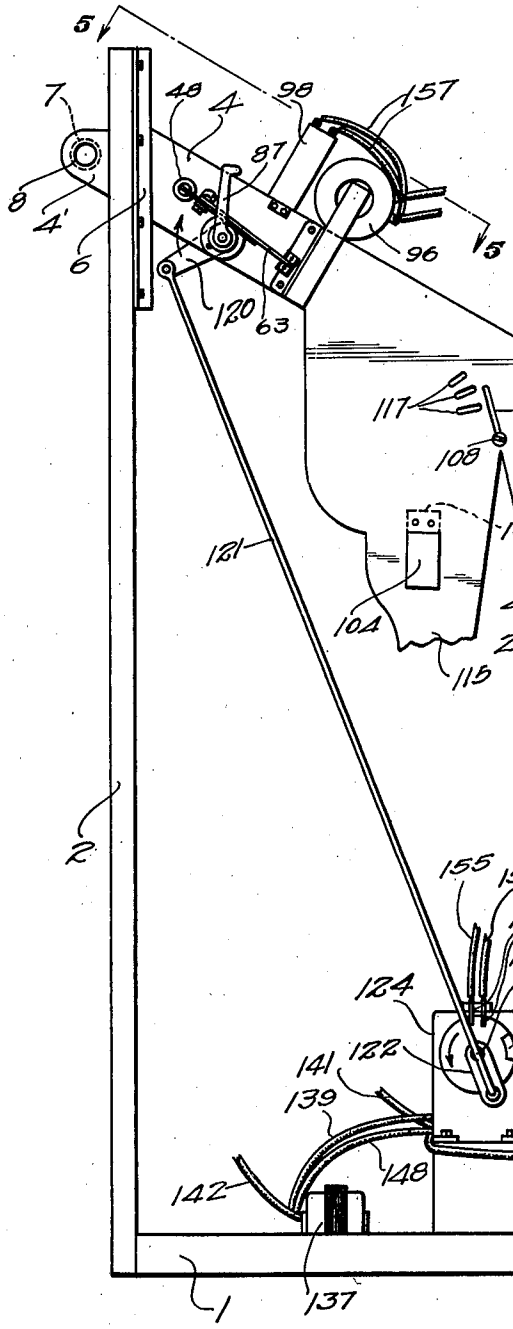

Fig. 2

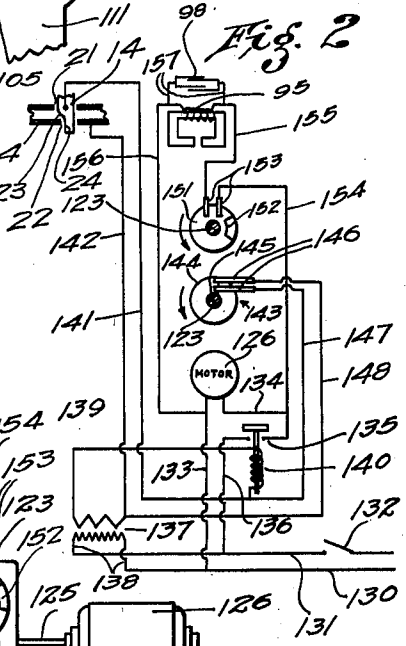

INVENTORS
Hugh E. Wurzbach
Leslie H. Wadsworth
By Arthur P. Knight and
Alfred W. Knight
ATTORNEYS

March 18, 1930. H. E. WURZBACH ET AL 1,751,120

METHOD AND APPARATUS FOR SELECTING METAL CHECKS

Filed July 28, 1928 7 Sheets-Sheet 2

Fig. 3

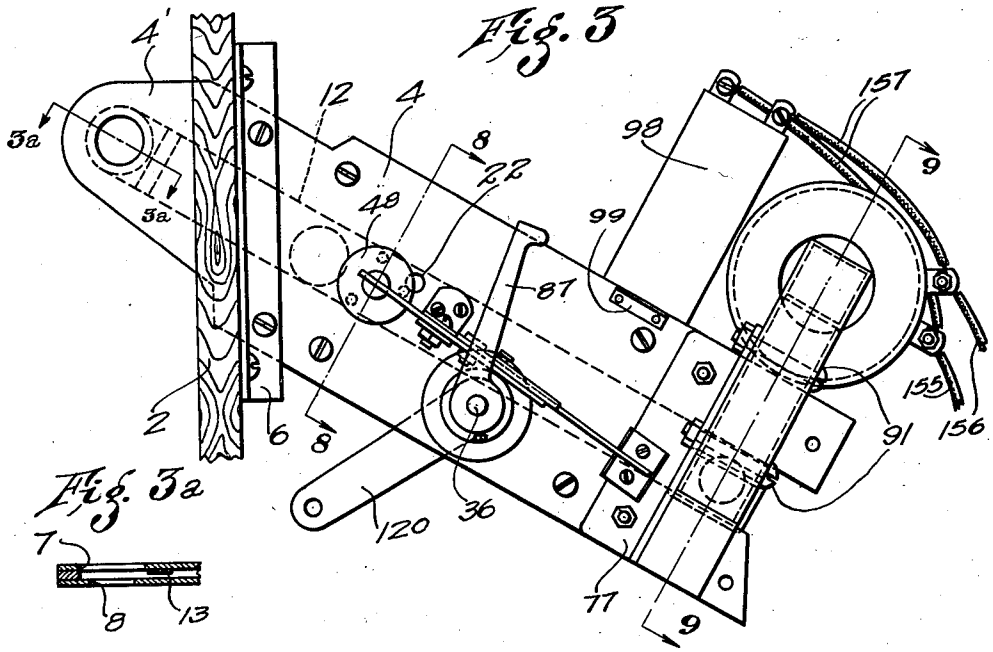

Fig. 3a

Fig. 4

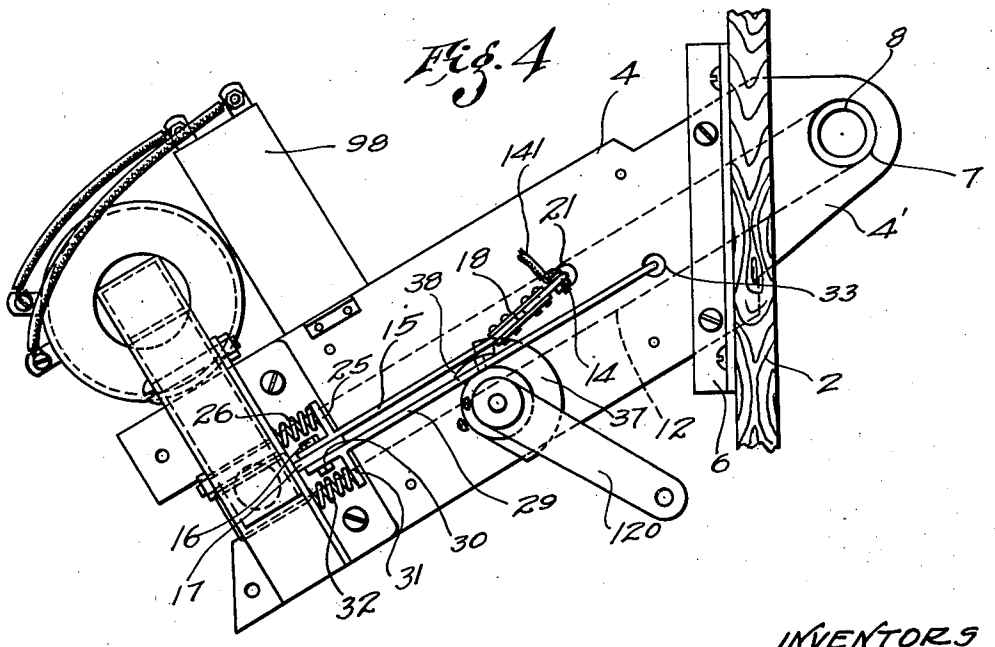

INVENTORS
Hugh E. Wurzbach,
Leslie H. Wadsworth
By Arthur P. Knight and
Alfred W. Knight
ATTORNEYS

March 18, 1930. H. E. WURZBACH ET AL 1,751,120

METHOD AND APPARATUS FOR SELECTING METAL CHECKS

Filed July 28, 1928 7 Sheets-Sheet 3

Fig. 5

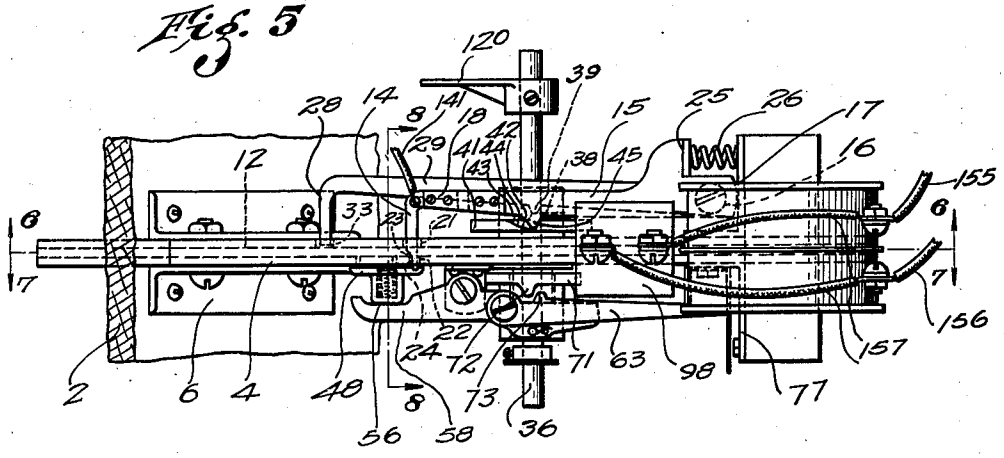

Fig. 8

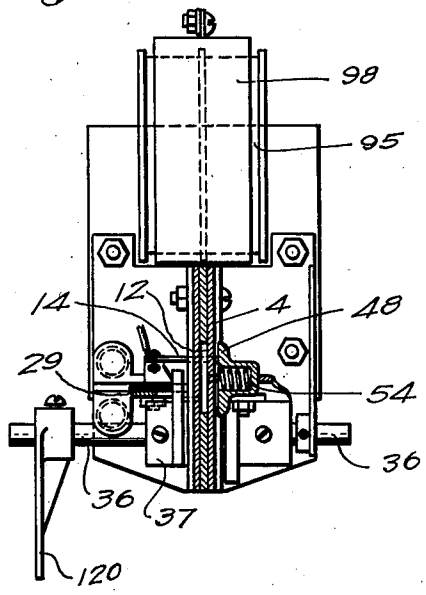

Fig. 9

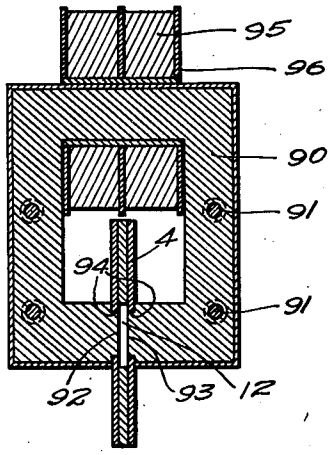

INVENTORS
Hugh E. Wurzbach
Leslie H. Wadsworth
By Arthur P. Knight and
Alfred W. Knight
ATTORNEYS

March 18, 1930. H. E. WURZBACH ET AL 1,751,120

METHOD AND APPARATUS FOR SELECTING METAL CHECKS

Filed July 28, 1928 7 Sheets-Sheet 4

Fig. 6

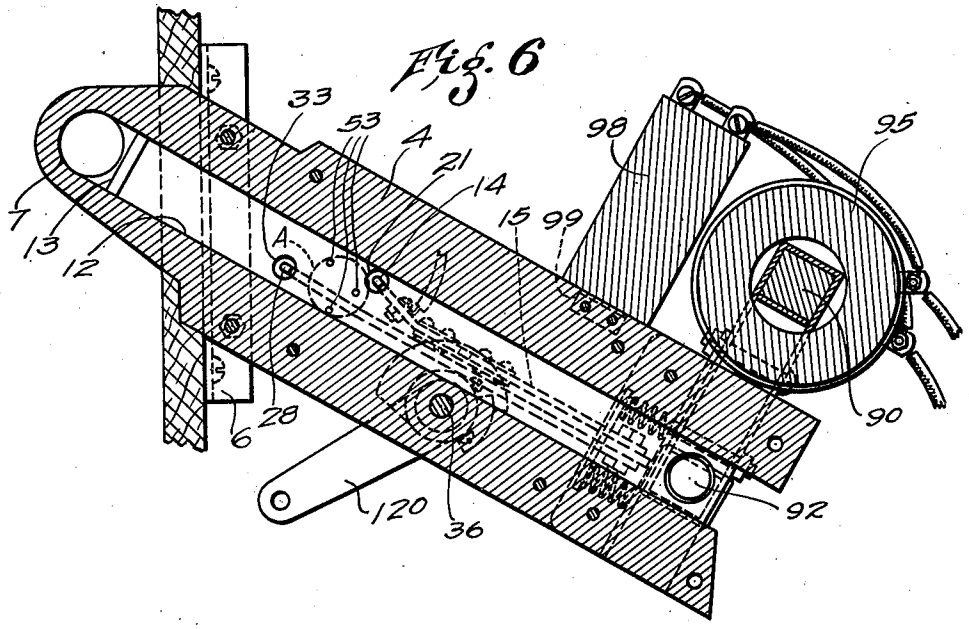

Fig. 7

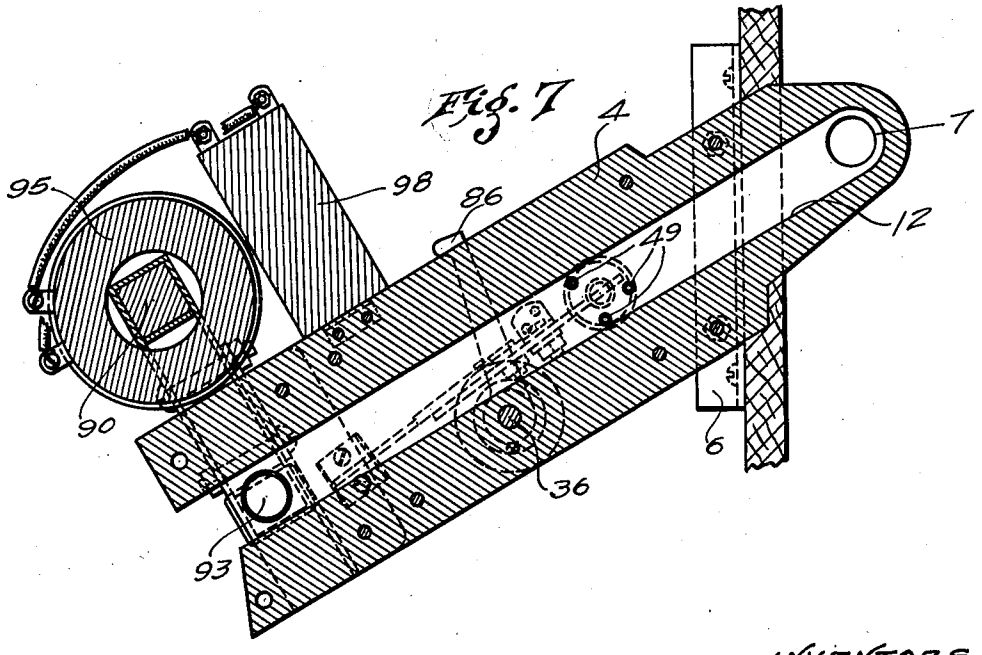

INVENTORS
Hugh E. Wurzbach
Leslie H. Wadsworth
By Arthur P. Knight and
Alfred W. Knight
ATTORNEYS

March 18, 1930. H. E. WURZBACH ET AL 1,751,120

METHOD AND APPARATUS FOR SELECTING METAL CHECKS

Filed July 28, 1928 7 Sheets-Sheet 5

Fig. 10

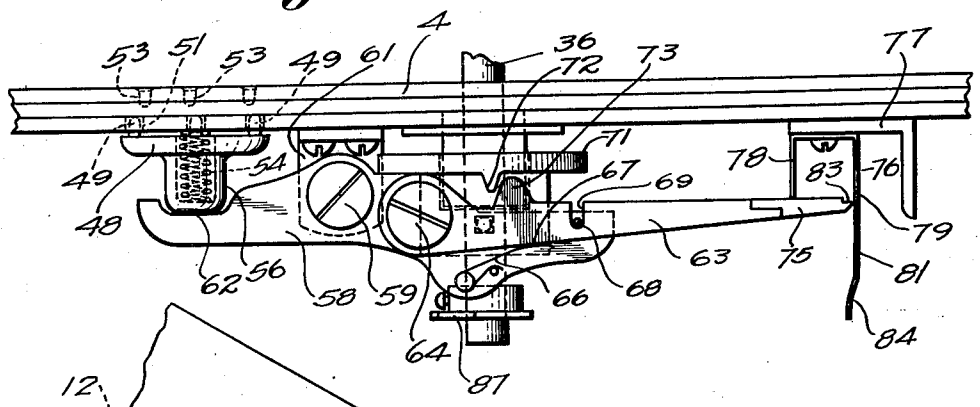

Fig. 11

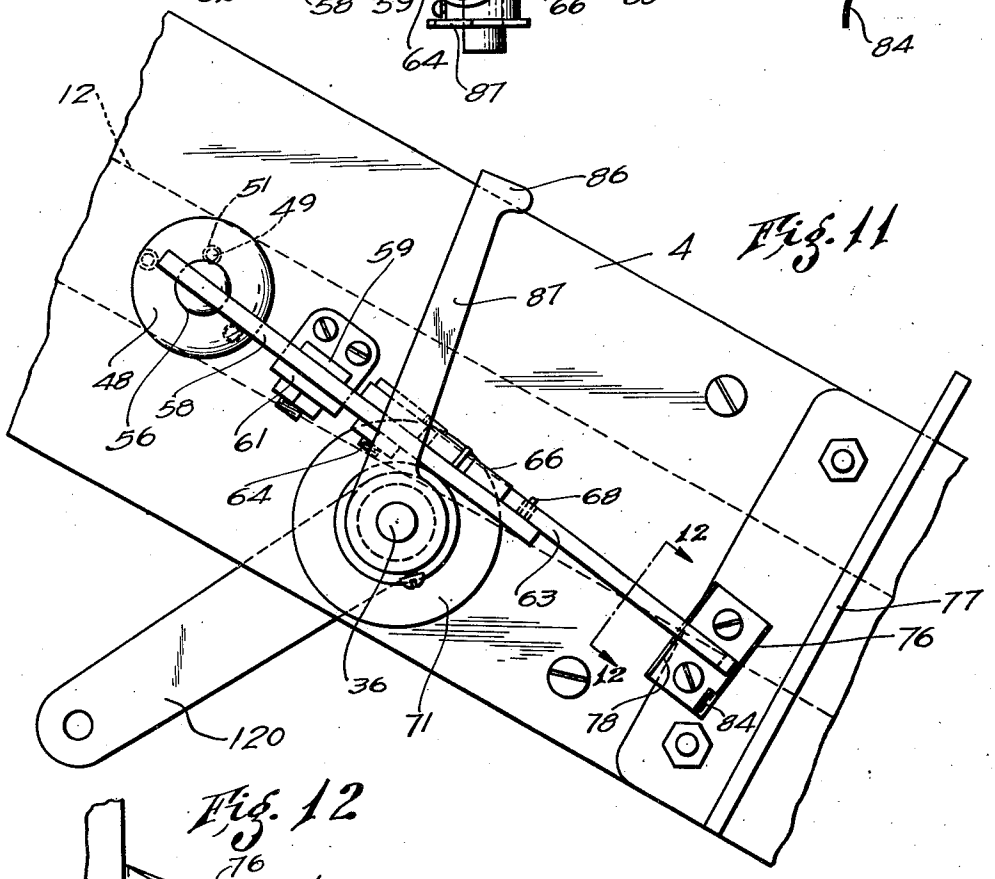

Fig. 12

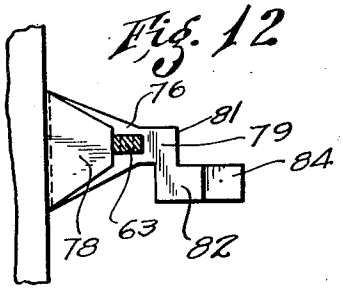

INVENTORS
Hugh E. Wurzbach
Leslie H. Wadsworth
By Arthur P. Knight and
Alfred W. Knight
ATTORNEYS

March 18, 1930. H. E. WURZBACH ET AL 1,751,120

METHOD AND APPARATUS FOR SELECTING METAL CHECKS

Filed July 28, 1928 7 Sheets-Sheet 6

Fig. 13

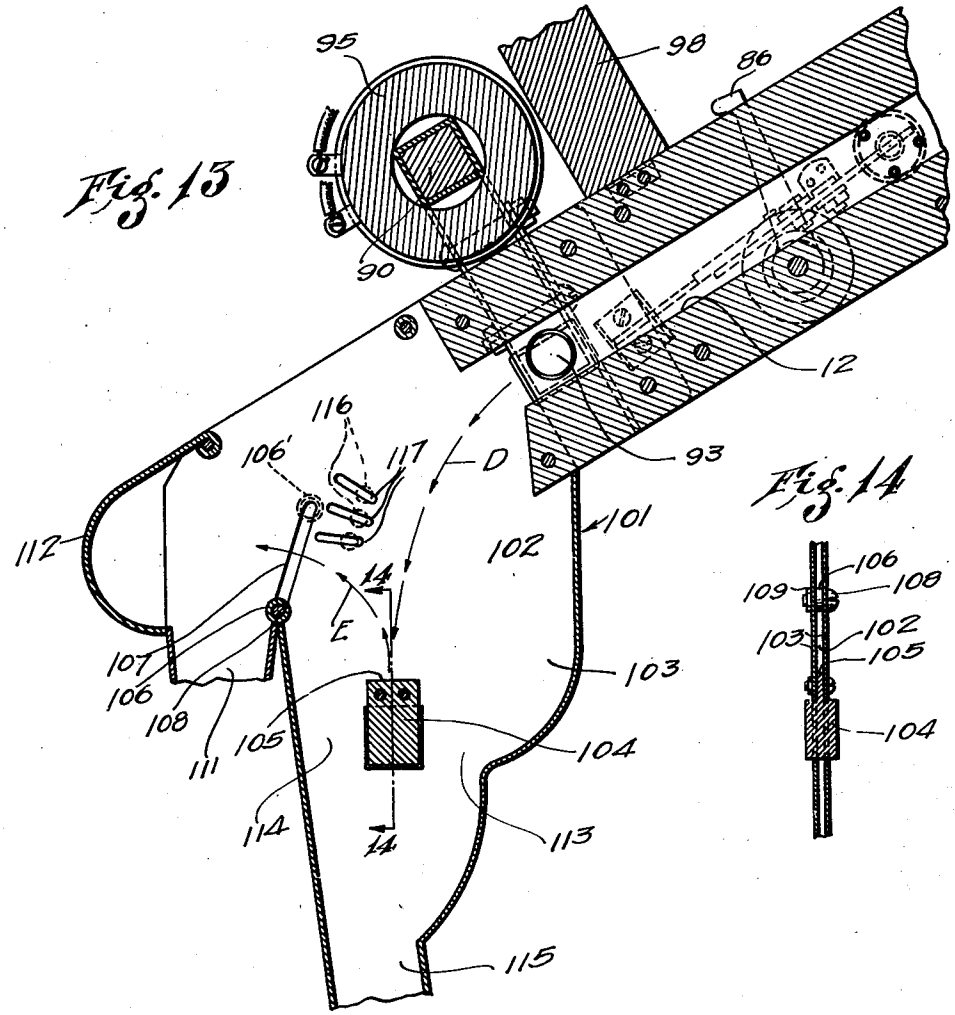

Fig. 14

INVENTORS
Hugh E. Wurzbach
Leslie H. Wadsworth
By Arthur P. Knight and
Alfred W. Knight
ATTORNEYS

March 18, 1930. H. E. WURZBACH ET AL 1,751,120

METHOD AND APPARATUS FOR SELECTING METAL CHECKS

Filed July 28, 1928 7 Sheets-Sheet 7

Fig. 15

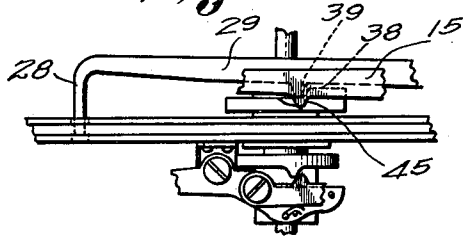

Fig. 16

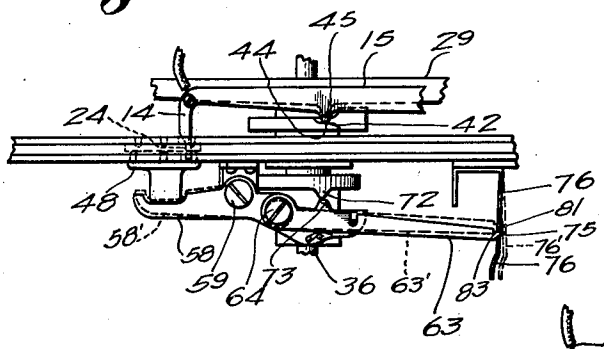

Fig. 17

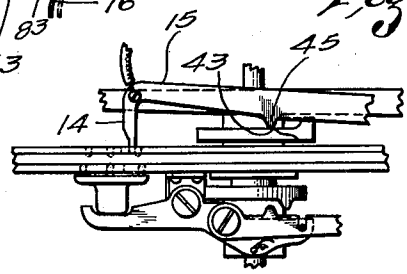

Fig. 18

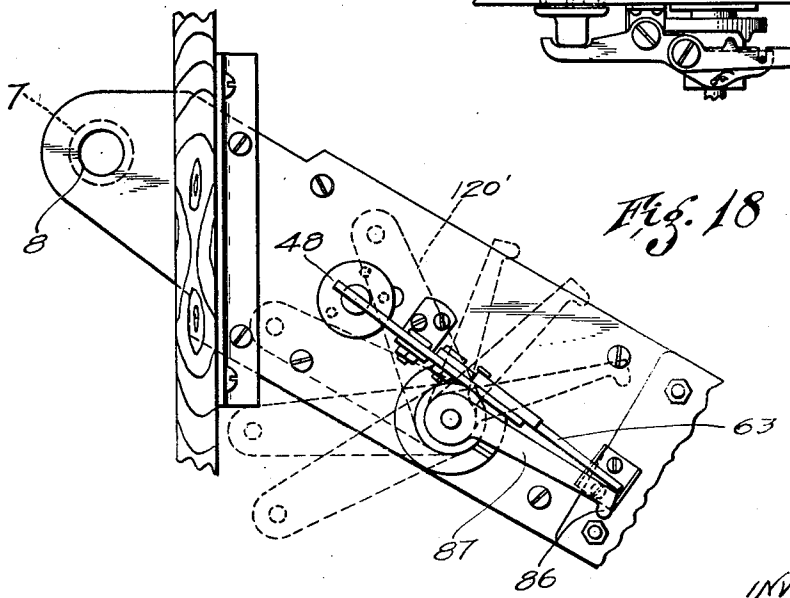

INVENTORS
Hugh E. Wurzbach
Leslie H. Wadsworth
By Arthur P. Knight and
Alfred W. Knight
ATTORNEYS

Patented Mar. 18, 1930

1,751,120

UNITED STATES PATENT OFFICE

HUGH E. WURZBACH AND LESLIE H. WADSWORTH, OF MAGNA, UTAH, ASSIGNORS TO SELECTOR CORPORATION, OF SALT LAKE CITY, UTAH, A CORPORATION OF UTAH

METHOD AND APPARATUS FOR SELECTING METAL CHECKS

Application filed July 28, 1928. Serial No. 296,067.

This invention relates to the selection of coins or other metal checks in accordance with certain properties thereof, for any purpose for which such selection is desired, such as the prevention of operation of vending machines, change delivering machines, or other check-controlled devices by checks other than those intended, or for the automatic separation of checks having certain desired characteristics from other checks.

The principal object of the invention is to provide for selective action based on certain novel principles whereby it is rendered practically impossible for any check, other than the one intended to be selected, to satisfactorily meet the tests imposed thereon.

A particular object of the invention is to provide for selection of metal checks in accordance with the average thickness of the main portion thereof, as distinguished from the maximum or over-all thickness.

According to certain methods and apparatus for check selecting heretofore used, means have been provided for preventing passage of a check having greater than a certain maximum thickness, and it has also been customary to provide in connection with such thickness tests, selective action depending upon other properties of the check. It has been found, however, that it is possible in some cases for a smooth-surfaced check or slug of substantially the same maximum thickness as a coin of a certain denomination and possessing a certain composition, to satisfactorily pass all the tests imposed thereon, even though the composition of such check or slug is different than that of the coin or check properly intended to be selected. An important feature of our invention is based on the finding that it is, however, practically impossible to make any spurious or imitating check and provide the same with indentations or depressions in the faces thereof similar to those of the coin intended to pass the tests, so as to have the same average thickness, and to still cause the same to satifactorily meet the other tests imposed. According to our invention, therefore, the check is tested by means of its average thickness, taking into consideration these indentations or depressions, instead of its maximum thickness. While this test is particularly advantageous in connection with selective operations dependent on other properties of the check, such as its magnetic, electrical, and resilient properties, it is obvious that it may be used alone if desired, so as to select coins provided with depressions upon their faces from smooth faced checks or slugs whose average thickness is different than that of the checks to be selected.

A particular object of the invention is to provide for combination of the above principle of testing average thickness with selective operations dependent upon other properties of the check, such as its magnetic and electrical properties and its resiliency.

A further object of the invention is to provide improved means for effecting a selective separation of checks containing iron or other strongly magnetic metal from checks having little or no property of magnetic attraction.

A particular object of the invention is to utilize a single electro-magnetic device for effecting the last-mentioned separation, namely, that dependent on the property of magnetic attraction, and to also cause selection of checks in accordance with their properties of magnetic permeability, hysteresis loss and electrical conductivity, and at the same time to cooperate in effecting or completing the selective action dependent on the thickness testing means.

The method of our invention comprises essentially gauging or testing the average thickness of a check while held in a certain position, and causing the path to be followed by said check after its release from said position to be selectively determined dependent upon whether or not said operation of testing or gauging its thickness indicates that it possesses a certain desired average thickness. According to one embodiment of our invention, the results of the thickness testing operation determine the time of release of the check from said position, and the check after being so released is caused to pass between the poles of an electromagnet which is energized only during a certain definite interval so that the time of release of the check

determines whether or not it is acted upon by a magnetic flux in passing between said pole pieces, and a separation is thereafter effected between checks which have had their motion modified by the action of said flux and checks which have passed between said pole pieces at a time of no flux and whose motion thus remains unmodified thereby. In case check is released from the thickness gauging means at such time as to be influenced by the magnetic flux, the extent of such influence and the subsequent separating action are also dependent upon the magnetic and electrical properties of the check. The method also comprises certain additional features as hereinafter pointed out.

The apparatus of our invention comprises essentially the necessary means for carrying out the above method of operation and also comprises certain advantageous embodiments of such means as will be hereinafter more fully described.

The accompanying drawings illustrate embodiments of the apparatus of our invention and referring thereto:

Fig. 1 is a side elevation of such an apparatus.

Fig. 2 is a wiring diagram thereof.

Fig. 3 is a side elevation of the upper portion of the apparatus shown in Fig. 1, taken from the same side as Fig. 1.

Fig. 3^a is a section on line 3^a—3^a in Fig. 3.

Fig. 4 is a side elevation taken from the reverse side.

Fig. 5 is a section on line 5—5 in Fig. 1.

Fig. 6 is a longitudinal section on line 6—6 in Fig. 5.

Fig. 7 is a longitudinal section on the same line looking in the reverse direction.

Fig. 8 is a transverse section on line 8—8 in Fig. 3.

Fig. 9 is a transverse section on line 9—9 in Fig. 3.

Fig. 10 is an enlarged view of certain parts of the mechanism shown in Fig. 5.

Fig. 11 is a side elevation of the parts shown in Fig. 10.

Fig. 12 is a partial section on line 12—12 in Fig. 11.

Fig. 13 is a longitudinal section of a lower portion of the apparatus.

Fig. 14 is a partial section on line 14—14 in Fig. 13.

Figs. 15, 16 and 17 are partial views taken in the same direction as Fig. 5, showing successive stages in the operation of the parts there shown.

Fig. 18 is an enlarged side view of the upper portion of the coin chute, showing successive stages in the operation of the releasing mechanism.

The apparatus may comprise a base 1 and a front panel or plate 2 secured to said base in any suitable manner. A check receiving and conducting chute 4 is mounted adjacent the upper end of panel 2 as by means of angle bars, said chute having a portion 4′ projecting in front of panel 2 and provided at one side with an opening 7 of just sufficient diameter to permit insertion of a check having a certain desired diameter and at the other side with an opening 8, which is of somewhat less diameter than opening 7 so as to prevent a check so inserted from passing therethrough. It will be understood that for most purposes all of the apparatus shown, with the exception of the projecting portion 4′ of the chute will be included in a suitable housing or casing (not shown in the drawings) so as to prevent tampering therewith, base 1 and panel 2 constituting in such case the bottom and front walls of such casing.

The chute 4 is provided with a downwardly and rearwardly inclined check conducting passage 12 through which any round check of small enough diameter to enter opening 7 is permitted to roll. As shown particularly in Fig. 3^a, a sharp-edged member 13 may be mounted adjacent one of the side walls of chute 4, just below opening 7, the spacing between said member and the opposite side wall being just sufficient to permit passage of a check of the desired maximum or over-all thickness. A contact member 14 is mounted at the end of arm 15 which is pivotally mounted as at 16 on bracket 17 secured to one side of chute 4. Contact member 14 may be insulated from arm 15 by insulating strips 18 which secure said parts together. Contact member 14 projects through an opening 21 in the near side wall of chute 4, and an opening 22 is also provided in the opposite side wall, to receive the end of contact member 14 at the innermost position thereof and thus prevent contact of the member 14 with the walls of the chute. The contact member 14 is preferably provided with an inclined face 23 adjacent its inner end and at the side from which the check approaches and with a flat face 24 beyond said inclined face, said flat face extending substantially perpendicular to the length of passage 12. The inclined face 23 is positioned in the passage when the contact member 14 is in its innermost position, that is, its position of rest between successive operations of the device, while the face 24 is adapted to be moved into said passage upon partial withdrawal of the contact member during each operation as hereinafter described. The arm 15 may be provided with an upwardly projecting lug 25 and a compression spring 26 is mounted between said lug and a portion of the bracket 17 to tend to move said arm toward said position of rest as shown in Fig. 5.

A stop member 28 is formed or provided at the end of arm 29 which is pivoted at 30 on the bracket 17 and is provided with lug 31 and spring 32 tending to move the arm 29 in a direction to bring the stop member within the

passage 12. Opening 33 is provided in the side wall of chute 4 so as to permit passage of stop member 28 therethrough, but said stop member is normally held, between successive operations of the device, in position outside the passage 12 by suitable cam means as hereinafter described.

A shaft 36 extends transversely through the chute 4 below passage 12 and is rotatably mounted in said chute. A cam member 37 is secured to said shaft at the same side of the chute as the arms 15 and 29, said cam member being provided with cam means 38 adapted to engage a lug 39 on arm 29 when the shaft 36 is in its normal position of rest, so as to hold said arm outwardly and maintain the stop member 28 in position outside the check conducting passage. Said cam member is also provided with cam means 41 having two inclined cam faces 42 and 43 separated by a relatively flat portion 44 and adapted to successively engage a lug 45 on arm 15 and withdraw the contact member 14 from the check conducting passage in two steps as hereinafter described.

Shaft 36 may be connected by arm 120, link 121 and arm 122 to a driving shaft 123 which may be operatively connected through suitable reducing gear mechanism in housing 124 to the shaft 125 of electric motor 126. The operating circuit of said motor, which includes a suitable limit switch for causing said motor to rotate shaft 123 through one complete revolution each time the circuit is established by insertion of a metal check in the apparatus, will be described hereinafter.

The thickness testing means comprises a disc or plate 48 provided with three inwardly projecting pins or gauge members 49 which extend through openings 51 in the side wall of chute 4, the member 48 being preferably mounted at the other side of said chute from the arms 15 and 29. Three pins or gauge members 53 are secured into the side wall of chute 4 opposite the disc 48. The gauge members 49 and 53 are mounted in such position that when a check is arrested by contact member 14 said members will be adapted to engage the opposite faces of said check inside the outer raised rim of the ordinary coin. The pins 53 project slightly into the passage 12 so as to engage in the depressions of a coin in said passage and the pins 49 and 53 are so spaced as to engage the coin at points suitably distributed over the opposite faces thereof, said pins being placed at such radial distances from the position of the center of the coin and in such angular distribution about said center as may be found to be most desirable for the selection of any particular coin or check. The pins 49 are sufficiently long to extend through side wall of chute 4 and slightly into the check conducting passage, but are normally held out of said passage by means of spring 54 which is mounted in a recess in a projecting portion 56 of disc 48. Said spring also serves to permit tilting or rocking of disc 48 in every direction about its center so as to permit all of the gauging members 49 to be pressed into engagement with the face of the check as hereinafter described.

The inward movement of the gauge members is effected by arm 58 which is pivotally mounted at 59 on bracket 61 and which engages the projection 56 as indicated at 62. A second arm 63 is pivoted at 64 on arm 58, pivot 64 being located at the opposite side of pivot 59 from the thickness gauging disc 48. A leaf spring 66 is mounted upon arm 58 and engages arm 63 as shown at 67 so as to tend to hold said arm inwardly against a pin or stop member 68 on arm 58, the arm 63 being notched or recessed as at 69 so as to permit relative outward movement of arm 63 independently of arm 58 under certain conditions as hereinafter described.

Another cam member 71 is mounted on shaft 36 at the same side of the chute as arms 58 and 63, said cam member being provided with cam means having projection 72 adapted to engage a lug 73 on arm 63, upon rotation of said shaft as hereinafter described and to swing the arms 58 and 63, so as to move gauge members or pins 49 inwardly against the check. Arm 63 is preferably provided with a wearing tip 75 of steel or other wear resistant metal and a resilient catch member 76 is provided over which said wearing tip moves in the swinging movement of said arm. Said catch member may comprise a strip of spring metal secured to a bracket 77 mounted on chute 4, said strip being bent to provide an outwardly projecting arm 78 acting as a stop member to limit inward movement of arm 63 and another outwardly projecting arm 79 provided with a shoulder 81, beyond which said arm is offset downwardly as indicated at 82 in Fig. 12, so that when the arm 63 is swung outwardly to move the wearing tip 75 past shoulder 81 the resiliency of arm 79 will move said shoulder inwardly into engagement with face portion 83 on said wearing tip and retain arm 63 in this position. The arm 82, however, is provided with a portion 84 at its outer end adapted to be engaged as hereinafter described by the rounded end 86 of releasing arm 87, secured to shaft 36.

Means are also provided for creating a zone of magnetic flux across the check conducting passage 12 at a position in the chute below the thickness testing mechanism. Such means may comprise, for example, an electromagnet having an iron core 90 which should be laminated in case alternating current is to be used for energizing the same, but which may, if desired, be solid if direct current is to be used. Said core may be of general horseshoe shape and may be secured as by

bolts 91 to the brackets 17 and 77 above mentioned. The opposing ends or poles 92 and 93 of said core may project through openings 94 in the side walls of the chute so that said poles are separated only by the thickness of passage 12 and any check moving in said passage must pass through the flux between said poles, provided the magnet is energized. A coil or winding 95 consisting of a suitable number of turns of wire on insulating spool means 96 is mounted upon the upper arm of core 90. A condenser 98 is mounted above chute 4 and preferably adjacent coil 95, said condenser being provided for the purpose of giving a slight kick-back or momentary sudden reversal of current in coil 95 when the power is cut off, for the purpose hereinafter described. Said condenser may be mounted on chute 4 by means of bracket 99.

Referring now more particularly to Figs. 13 and 14, chute 4 opens at its lower end and just beyond the position of magnet poles 92 and 93, into an enlarged housing 101 providing a passage 102 between the side plates 103 thereof, said passage being only slightly greater in width than the thickness of the check designed to pass therethrough but having a sufficient extension in the plane of said check to permit the check to follow different paths therethrough due to gravity, depending upon the weight of said check and the velocity with which it leaves chute 4. Within the passage 102 is mounted an anvil or impact member 104 which may be of steel or other suitable metal or of bakelite or any other suitable material and is of sufficient size and weight to cause the check falling thereon to rebound as desired. Said anvil is placed, as shown, below and somewhat beyond the lower end of chute 4, so that a check leaving the lower end of said chute at exactly a predetermined velocity will strike said anvil squarely on its impact face 105 and rebound in the desired manner, provided such check possesses the proper resilient qualities.

Beyond and somewhat above anvil 104 is provided an adjustable deflecting member 106 which may be set in any desired position in slots 107 in the walls 103, said deflecting member comprising, for example, a metal sleeve or section of tubing held in position by means of screw 108 and nut 109. Deflecting member 106 may be set in such position that a check striking impact member 104 squarely and having the proper resiliency will rebound over said deflecting member, while any check of less resiliency will strike said deflecting member and be thrown back into passage 102. At the other side of said deflecting member is provided a downwardly extending chute 111 into which any check which rebounds over said deflecting member will fall. The end of passage 102 above said chute may be closed by a wall 112 so as to prevent any check from escaping at this point and guide all of the checks passing over deflecting member 106 into the chute 111.

Housing 101 is formed to provide passages 113 and 114 in front of and beyond anvil 104, so that any check failing to strike said impact face squarely and rebound over deflecting member 106, may fall through one or the other of said passages. Housing 101 may be continued on downwardly and have its lower end formed as a chute 115, leading to any suitable receptacle for rejected checks. If desired, additional deflecting members, as indicated in dotted lines at 116 in Fig. 13, may be mounted in suitable positions in one or more of the slots 117 in side walls 103, such slots serving to permit adjustment of said deflecting members in the same manner as deflecting member 106 aforesaid. If such deflecting members are used, any checks leaving chute 4 at other than the proper velocity will strike said members and be deflected, and thus be prevented from striking impact member 104 in such manner as to rebound over member 106.

If desired, a second deflecting member 106′ may also be mounted in the upper portion of slots 107 so as to provide sufficient clearance between deflecting member 106 and 106′ for passage of the proper check, such additional deflecting member serving to prevent any check having greater resiliency or rebound than that to be selected from entering chute 111. Such additional deflecting member is not essential for the selection of silver coins or checks, however, since the resiliency thereof is greater than any of the other metals commonly employed as fraudulent substitutes therefor in the operation of check controlled apparatus, and the lower deflecting member 106 alone will, therefore, be sufficient to effect the separation dependent upon resiliency.

The electric circuit for the apparatus may comprise, as shown particularly in Fig. 2, supply wires 130 and 131 connected to any suitable source of electric power supply, for example a commercial 110 volt alternating current supply line. A switch 132 may be provided in one of said supply wires for turning on or off the supply of power to the apparatus. Wire 133 may lead from one of the supply wires such as 130 to one terminal of electric motor 126, the other terminal of said motor being connected by wire 134 to one contact of a circuit closing relay switch 135, while wire 136 leads from the other contact of said switch back to the other supply wire 131. A step down transformer, such as an ordinary bell ringing transformer, 137 may have its primary winding connected by wires 138 to the power supply wires, while the secondary of said transformer may be connected by wire 139 to the electromagnetic winding 140 of the circuit closing switch 135 aforesaid. From winding 140, wire 141 leads to contact member 14, while wire 142 leads from the

walls of chute 4 or from any suitable part of the apparatus which is electrically connected thereto, back to the other side of the secondary winding of transformer 137.

A limit switch 143 of any suitable type may be provided on shaft 123, said limit switch comprising, for example, a contact disc 144 mounted upon and insulated from said shaft and provided with a segment 145 of insulating material. A pair of contact members or brushes 146 are mounted in position to engage said disc and insulating segment. One of said brushes may be connected by wire 147 to the relay switch winding 140, while the other of said brushes may be connected by wire 148 to the same terminal of the transformer secondary as wire 142.

Suitable means are also provided for supplying current to the winding 95 of the flux creating electromagnet during only a limited portion of each period of operation of the apparatus. Such means may comprise, for example, a disc 151 of insulating material upon which is mounted a contact segment 152, and a pair of brushes or contact members 153 mounted in position to engage said contact segment during a portion of each rotation of said disc. Said disc may also be mounted upon shaft 123. Said last-named disc and brushes are not shown in Fig. 1, but are shown diagrammatically in Fig. 2. One of said brushes 153 may be connected by wire 154 to wire 134 leading to the circuit closing switch 135, while the other of said brushes may be connected by wire 155 to the electromagnetic winding 95. The other end of said winding may be connected by wire 156 to wire 133 and hence to the power supply line. The condenser 98 may be connected across the terminals of winding 95 by means of wires 157.

The operation of the apparatus may be described as follows, it being assumed that the same has first been placed in operative condition by closing switch 132. Any coin or check whose diameter is not greater than that of opening 7 may be inserted through said opening into the upper end of passage 12 and will roll downwardly in said passage provided its maximum or over-all thickness is not greater than the clearance between the sharp edged member 13 and the opposite side wall of chute 4.

The positions occupied at this time by the various parts of the mechanism associated with the chute 4 are best shown in Figs. 5 and 10. The stop member 28 is held out of passage 12 due to the fact that lug 39 is held outwardly by cam means 38, while contact member 14 is held by spring 26 acting on arm 15, in its furthest position of inward movement, so that the inclined face 23 of said contact member is positioned in the passage, the cam means 41 being at this time out of engagement with lug 45. The projection 72 on cam member 71 is also out of engagement with the lug 75 on arm 63, so that the thickness gauging pins 49 are held out of the passage 12 by spring 54, the end portion 75 of said arm resting against stop 78. The check, therefore, engages the inclined face 23 of contact member 14 and completes an electric circuit through the winding of relay switch 135 as follows: This circuit leads from one side of the secondary winding of transformer 137 through wire 142 to the walls of chute 4, thence through the check to contact member 14, then by wire 141 to winding 140 and through wire 139 back to the transformer. Relay switch 135 is thus closed and completes the motor circuit through wire 136, switch 135, and wires 134 and 133. Motor 126 is thus set in operation and causes rotation of shaft 123 in a counter-clockwise direction as indicated by the arrows in Figs. 1 and 2. A slight rotation of said shaft is sufficient to move the insulating segment 145 out from beneath brushes 146 whereafter the circuit of relay winding 140 is maintained through said brushes and wires 147 and 148, so that contact arm 14 may then be withdrawn from engagement with the check without causing the motor to stop.

The initial rotation of shaft 123 also operates through arm 122, link 121 and arm 120 to rotate shaft 36 in a clockwise direction (in Figs. 1 and 3) thereby withdrawing cam member 38 from beneath lug 39 and permitting spring 32 to move the stop member 28 across the check passage 12 and into position to arrest any additional checks which may be deposited in the chute while the mechanism is in motion and hence prevent interference with the correct operation thereof. The position of the parts at this time is shown in Fig. 15. Further rotation of shaft 36 in the same direction causes lug 45 on arm 15 to be engaged by the inclined cam face 42 so as to move contact arm 14 to the position shown in Fig. 16, at which time the flat space 24 thereof is in position in the check conducting passage and the check is thus permitted to move forward a little further in the passage so as to be accurately centered in thickness testing position. The position of a check at this time is indicated in dotted lines at A in Fig. 6. The projection 72 at this time engages projection 73, while lug 45 is riding upon the flat cam face 44, and causes arms 63 and 58 to swing together about pivot 59 so as to press disc 48 and the gauging pins 49 carried thereby inwardly toward the check. If the check is provided with the proper proportion of indentation or depression in its surfaces, the pins 49 and 53, or some of them, will be permitted to enter such depressions and arm 58 will be permitted to move inwardly with arm 63 throughout the entire movement of the latter arm by cam projection 72. Arm 58 will under these conditions be moved to some po-

sition as indicated in dotted lines at 58′ in Fig. 16, while arm 63 will be moved to a position such as indicated in dotted lines at 63′, the wearing tip 75 simply moving over the surface of the resilient catch member 76.

Under these conditions, as soon as projection 72 passes beyond lug 73, arms 63 and 58 will be returned by spring 54 to their original positions, withdrawing pins 49 from passage 12, while at the same time the lug 45 will be engaged by the second inclined cam face 43 and completely withdraw the contact and stop member 14 from the passage, and the check will thus be permitted to roll on downwardly in the chute.

If, on the other hand, the check is not provided with the proper proportion or depth of indentations or depressions upon its surfaces and is consequently of a greater average thickness than that of the check to be selected, the inward movement of pins 49 will be limited and arm 58 will be arrested in the position indicated in full lines in Fig. 16 before the outward movement of arm 63 has been completed. Projection 72 will thereafter cause arm 63 to move independently about pivot 64 to the position indicated in full lines in Fig. 16, so that the tip of said arm is moved beyond the shoulder 81 of catch member 76. Said catch member will then spring to the position indicated in full lines in Fig. 16, bringing said shoulder against the face 83 so as to prevent return movement of arm 63 upon movement of lug 72 out of engagement with lug 73. Under these conditions arm 58 will also be held in this position by means of leaf spring 66 and pins 49 will be held inwardly so as to hold the check between said pins and the opposing pins 53 and prevent release of the check from this position upon withdrawal of contact and stop member 14.

The contact segment 152 (Fig. 2) is mounted in such angular position on shaft 123 as to close connection between brushes 153 and complete the circuit of the electromagnetic winding 95, through wires 154, 155 and 156, and hence create a magnetic flux across the passage 12 between the poles 92 and 93, during the time of passage between said poles of any check which possesses the proper average thickness and which is, therefore, released by the thickness gauging mechanism as soon as lug 72 releases arm 63. For this purpose, said contact segment may be so positioned as to make circuit-closing engagement with said brushes at about the time the projection 72 begins to release arm 63 and to maintain such connection closed for a sufficient period of time to permit any check released by pins 49 at this time to pass between the poles of the electromagnet. This period may represent, for example, about one-eighth of the total period of revolution of shaft 123. Any check released at this time will, therefore, be subjected to the action of such flux in passing between the poles 92 and 93 and will have its velocity effected by such flux in accordance with its electrical and magnetic properties. If the check is composed of or contains a considerable proportion of magnetizable metal such as iron, it will be attracted to one or the other of the poles of the magnet and will be held thereby until de-energization of the magnet as hereinafter described. Any other check, however, will be permitted to pass through the magnetic flux, but the motion of the check through such flux will cause electric currents commonly known as eddy currents to be set up therein and will at the same time exert a retarding force upon the check, the strength of such force, for a given strength of magnetic field, depending primarily upon the electrical conductivity of the check.

The strength of the retarding force thus exerted upon the check will influence the velocity thereof and thus determine the velocity at which the check is discharged from the lower end of passage 12 and into the passage 102. The electromagnet is designed to produce a flux of such strength and impact member 104 is so placed that a check of the character to be selected and consisting of metal having a certain electrical conductivity will, after having its velocity diminished by passage through the magnetic flux, leave the passage 12 at just sufficient velocity to cause it to fall in the path indicated at D in Fig. 13 and to strike squarely upon the upper face 105 of said impact member. Any check having different electrical properties will leave the passage 12 at a different velocity and may either fall entirely clear of impact member 104 or may strike said impact member, but at such angle as to cause it to fail to rebound over the deflecting member 106 (or between deflecting members 106 and 106′). In either event such improper check will pass through either of the openings 113 and 114 and be discharged through chute 115.

Furthermore, even though a check possesses the proper electrical properties and, therefore, strikes the impact member 104 squarely, it will still be rejected unless it also possesses the proper resiliency. If the check so striking the impact member has exactly the resiliency of the check to be selected, it will rebound over deflecting member 106 (or between deflecting members 106 and 106′) as indicated at E in Fig. 13, and will be discharged through chute 111. If, however, the check is of less resiliency it will fail to rebound sufficiently and hence will strike deflecting member 106 and be thrown back and discharged through chute 116. In a similar manner, in case the second deflecting member 106′ is provided any check having too great a resilience will strike said second deflect-

ing member and will also be thrown back and discharged through chute 115.

Upon further rotation of shaft 123, the contact segment 152 will pass out of engagement with one of the brushes 153, thus breaking the circuit of the electromagnetic winding 95. At the instant the circuit is thus interrupted, the condenser 98 will discharge through the winding 95 and the resulting sudden reversal of direction of the magnetic flux will cause any magnetizable check which had been attracted to and held by one of the poles of the magnet to be dislodged therefrom. The check so dislodged will fall from the end of passage 12, but since the zone of magnetic flux is very close to the end of said passage, such check will fail to attain any considerable velocity before leaving such passage and will, therefore, fall short of impact member 104 and will be delivered through chute 115.

During the remainder of the cycle of operation the magnet remains de-energized, and at a suitable time during this period the releasing arm 87 is moved as shown in Fig. 18 into position to bring the end 86 thereof into postion to engage the portion 84 at the outer end of the resilient catch member 76 and force the same outwardly to the position indicated in dotted lines at 76′ in Fig. 16, thus moving shoulder 81 out of engagement with the tip 75 of arm 63 and releasing said arm. Spring 54 thereupon returns arms 58 and 63 to normal position, withdrawing pins 49 from the check conducting passage, so that any check retained by pins 49 and 53 because possessing too great an average thickness as above described, will be released at this time. Such check will roll freely through chute 12 and due to non-energization of magnet core 90 at this time, will leave said passage with undiminished velocity and will, therefore, pass beyond the impact member 104 or at least beyond the proper point impact thereon to cause it to rebound in the desired manner, and will hence be delivered through chute 115.

It may be seen from the above description that the magnetic flux created by the electromagnet across the check conducting passage not only serves to effect a selection of the checks dependent upon the electrical properties thereof, but also by reason of its position near the end of the check conducting passage acts to reject any check momentarily held thereby by reason of its magnetizable properties and furthermore, by having its period of activity properly timed with relation to the action of the thickness gauging mechanism, cooperate in the rejection of checks having too great an average thickness.

The above operations take place during approximately the first half of the rotation of shaft 123, which acts to move arm 120 to approximately the limit of its travelling, that is to the position indicated at 120′ in Fig. 18. During the remainder of the rotation of said shaft, said arm is rotated in a counter-clockwise direction in Fig. 18 back to its original position and the several parts of the mechanism are thus restored to normal positions. Arm 87 is withdrawn from catch member 76. The cam member 41 is moved out of position of engagement with lug 45 on arm 15 so as to permit contact member 14 to be returned to its innermost position, after which cam member 38 engages lug 39 to withdraw stop member 28 from the check conducting passage. An additional check which may have been inserted in the machine and held back by said stop member would thereupon be released and pass on into engagement with contact member 14, causing a repetition of the operations above described.

Assuming, however, that no such additional check is present upon withdrawal of stop member 28, the circuit of electric motor 126 will be interrupted when the insulating segment 145 is returned to its original position beneath brushes 146 and causes relay switch 135 to open. The limit switch 143, therefore, serves to permit only one complete rotation of shaft 123 and hence one complete cycle of operation of the machine, for each check inserted therein.

We claim:

1. An apparatus for selecting metal checks comprising means defining a downwardly inclined check conducting passage, stop means for arresting a check at a definite position in said passage, gauge means movable to position to engage a face of a check in such position and gauge the average thickness thereof, means tending to withdraw said gauge means from such position, catch means operable upon engagement of said gauge means with any check having greater than a certain average thickness to prevent such withdrawal of the gauge means and cause said gauge means to hold the check in said position independently of said stop means, means for removing said stop means from said passage after operation of the gauge means so as to release any check not held by said gauge means, means operable to subsequently release said catch means and permit withdrawal of said gauge means and release of any check held thereby, and means for receiving and separately delivering checks released from said position upon removal of said stop means and checks released from said position upon withdrawal of said gauge means.

2. An apparatus for selecting metal checks comprising means for arresting a check in a certain position, means for gauging the average thickness of a check while in such position, means dependent upon the operation of said gauging means to determine the time of release of the check from such position de-

pendent upon whether said check exceeds or falls below a certain average thickness, and means for selectively separating checks in accordance with the time of release thereof from said position.

3. An apparatus for selecting metal checks comprising means for arresting a check at a certain gauging position, passage means for conducting checks downwardly from said gauging position, a plurality of fixed projecting members adapted to engage points distributed over one face of a check while in such gauging position, gauge means having a plurality of projecting members and being movable into or out of position of engagement of the projecting members thereon with points distributed over the other face of the check while in gauging position, means tending to move said gauge means out of such check engaging position, operating means for moving said gauge means to check engaging position so as to engage the check between the projecting members of the gauge means and the fixed projecting members whereby the amount of such inward movement of the gauge means is dependent upon the average thickness of the check and for subsequently releasing said gauge means so as to permit the same to move out of check engaging position unless otherwise held, catch means operable upon limitation of inward movement of said gauge means at a certain position due to engagement with a check having greater than a certain average thickness to hold said gauge means in such check engaging position and thus hold the check after release of the gauge means by said operating means, means for removing said check arresting means from position of engagement with the check subsequent to release of the gauge means by said operating means so as to cause any check not still held by the gauge means to be released and pass on downwardly in said passage means, means for subsequently releasing said catch means so as to permit movement of said gauge means out of check engaging position and permit any check previously held thereby to be released and to pass on downwardly in said passage means, and means for selectively separating checks released from said gauging position upon removal of said check arresting means from checks released from said position upon release of said catch means.

4. An apparatus as set forth in claim 3, in which the selective separating means comprise an electromagnet having its poles disposed at opposite sides of said passage means, means for energizing said electromagnet during only a certain period, such that a check released from gauging position upon removal of said check arresting means will pass between the poles of said electromagnet during the period of energization thereof and will have its velocity influenced by the magnetic flux therebetween, while a check released from such gauging position upon release of said catch means will pass between said poles outside said period of energization and will be unaffected by magnetic flux, and means for selectively separating checks delivered through said passage means in accordance with the velocity of said checks after passing between said poles.

5. An apparatus for selecting checks comprising means for aresting the check at a certain position, means for gauging the average thickness of a check while in such position, said gauging means comprising members normally spaced apart to permit entry of the check between the gauging members and said gauging members being provided with means adapted to engage the check, means for causing relative movement of the gauging members toward one another so as to bring said engaging means in contact with the check, one of said gauging members being mounted in such manner as to be free to tilt so as to permit said member to adjust itself to bring a plurality of the check engaging means thereon into contact with the check so that the movement of said gauging member is dependent on the average thickness of the check, and means dependent upon the operation of said gauging means for causing a selective separation of checks according to their average thickness.

6. An apparatus as set forth in claim 5 wherein the said gauging members are each provided with three check engaging means located at different radial distances from the center of the check when in gauging position.

7. An apparatus for selecting checks comprising a check chute, means for arresting the check in a certain position in said chute, stationary check engaging means located at one side of said chute in position to engage the check at different portions thereof when the check is in gauging position, a movable gauging member mounted on the opposite side of said chute and provided with a plurality of check engaging means adapted to engage the check at different portions thereof, spring means normally holding said movable gauging member away from the said guide means so as to withdraw the check engaging means thereon from the path of the check, said movable gauging member being mounted on said spring means so as to provide for tilting movement of the gauging member, and means for moving said movable gauging member toward the check so as to bring the check engaging means thereon into contact with the check.

8. A construction as set forth in claim 7 and comprising in addition, means for withdrawing the removable gauging member from the check chute to release the check from engagement with the gauging means, means for operating the check arresting means to release the check, and means dependent upon

the operation of said gauging means and adapted to operate upon the check subsequently to its release by said arresting means for causing a selective separation of checks according to their average thickness.

9. An apparatus for selecting checks comprising a check chute, means for arresting the check in a certain position in said chute, stationary check engaging means located at one side of said chute in position to engage the check at different portions thereof when the check is in gauging position, a movable gauging member mounted on the opposite side of said chute and provided with a plurality of check engaging means adapted to engage the check at different portions thereof, spring means normally holding said movable gauging member in position to withdraw the check engaging means thereon from the path of the check, said movable gauging member being mounted on said spring means so as to provide for tilting movement of the gauging member about its center in every direction, and means for moving said movable gauging member toward the chute so as to bring the check engaging means thereon into contact with the check.

In testimony whereof we have hereunto subscribed our name this 19 day of July, 1928.

HUGH E. WURZBACH.
LESLIE H. WADSWORTH.