US00D767801S

(12) United States Design Patent

Han et al.

(10) Patent No.: US D767,801 S
(45) Date of Patent: ** Sep. 27, 2016

(54) **HEAD LAMP FOR AUTOMOBILE**

(71) Applicant: **Kia Motors Corporation**, Seoul (KR)

(72) Inventors: **Jae Do Han**, Gyeonggi-Do (KR); **Seo Hee Ahn**, Gyeonggi-Do (KR)

(73) Assignee: **Kia Motors Corporation**, Seoul (KR)

(**) Term: **14 Years**

(21) Appl. No.: **29/474,300**

(22) Filed: **Aug. 5, 2014**

(30) **Foreign Application Priority Data**

Mar. 25, 2014 (KR) 30-2014-0014753

(51) **LOC (10) Cl.** **26-06**

(52) **U.S. Cl.**
USPC **D26/28**

(58) **Field of Classification Search**
USPC D26/28–36; 362/459–468, 475–478, 362/485, 486, 487
CPC B60Q 1/02; B60Q 1/04
See application file for complete search history.

(56) **References Cited**

U.S. PATENT DOCUMENTS

D674,940 S * 1/2013 Lai D26/28
D678,567 S * 3/2013 Lai D26/28
D689,222 S * 9/2013 Lai D26/28
D707,865 S * 6/2014 Yoshida D26/28
D718,893 S * 12/2014 Lai D26/28
D720,870 S * 1/2015 Lim D26/28
D721,196 S * 1/2015 Lai D26/28
D728,133 S * 4/2015 Bieling D26/28
D739,578 S * 9/2015 Han D26/28
D744,129 S * 11/2015 Futschik D26/28
D745,726 S * 12/2015 McMahan D26/28
D747,512 S * 1/2016 Lai D26/28
D747,515 S * 1/2016 McMahan D26/28
D752,254 S * 3/2016 Futschik D26/28
D752,255 S * 3/2016 Futschik D26/28

* cited by examiner

Primary Examiner — Lakiya Rogers
Assistant Examiner — Harold Blackwell, II
(74) *Attorney, Agent, or Firm* — Mintz Levin Cohn Ferris Glovsky and Popeo, P.C.; Kongsik Kim

(57) **CLAIM**

The ornamental design for a head lamp for automobile, as shown and described.

DESCRIPTION

FIG. **1** is a perspective view of a head lamp for automobile according to the present invention.
FIG. **2** is a front view of the head lamp for automobile of FIG. **1**.
FIG. **3** is a rear view of the head lamp for automobile of FIG. **1**.
FIG. **4** is a left side view of the head lamp for automobile of FIG. **1**.
FIG. **5** is a right side view of the head lamp for automobile of FIG. **1**.
FIG. **6** is a top view of the head lamp for automobile of FIG. **1**; and,
FIG. **7** is a bottom view of the head lamp for automobile of FIG. **1**.

1 Claim, 7 Drawing Sheets

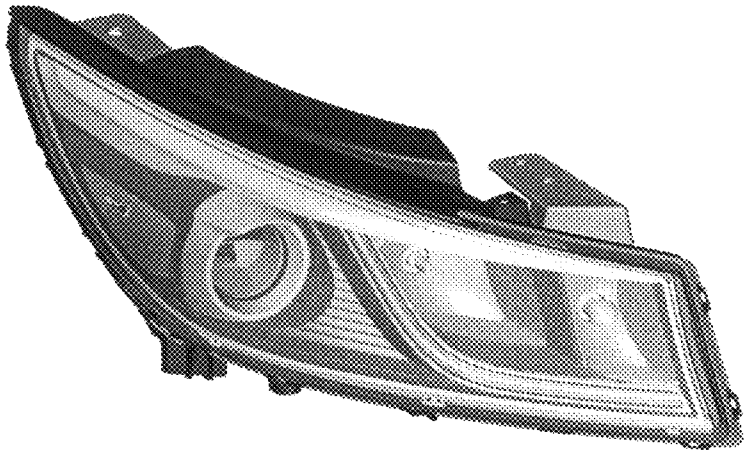

FIG. 1

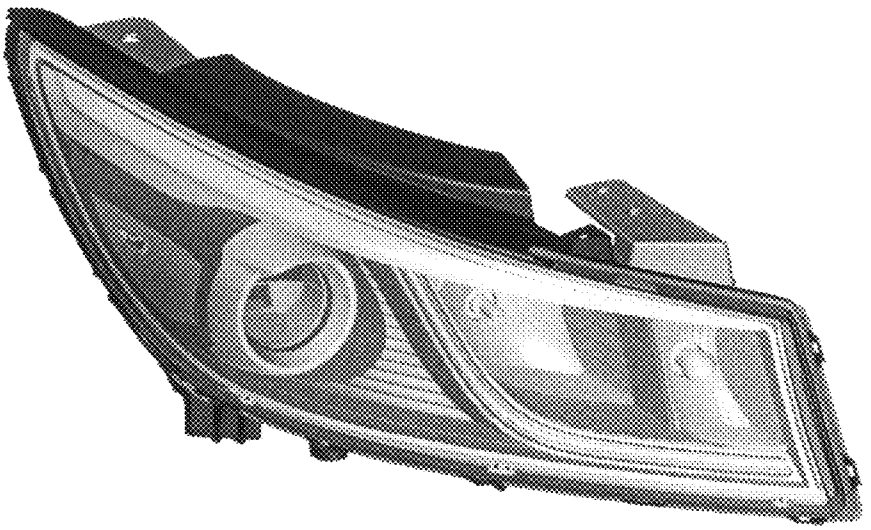

FIG. 2

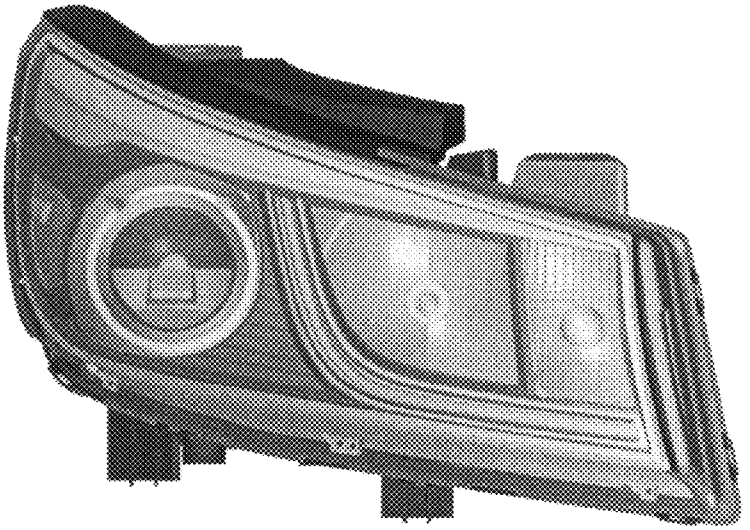

FIG. 3

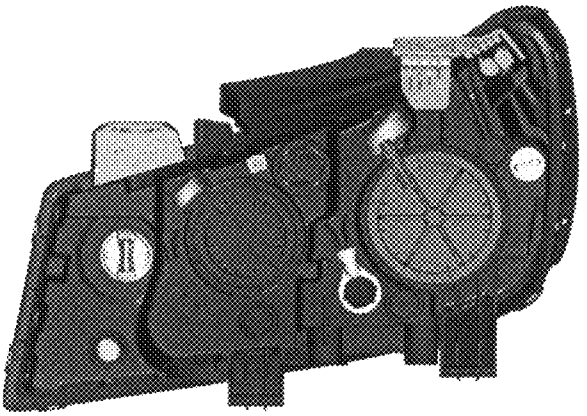

FIG. 4

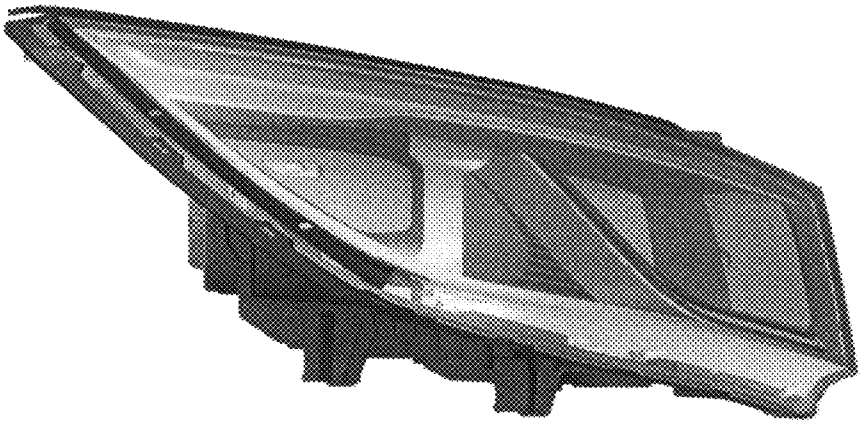

FIG. 5

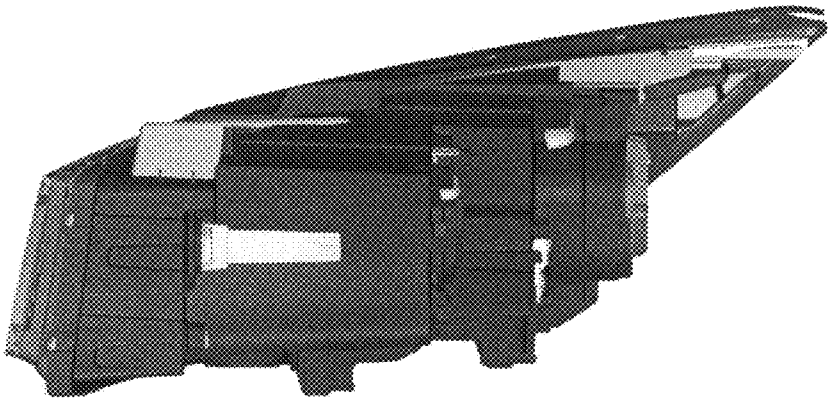

FIG. 6

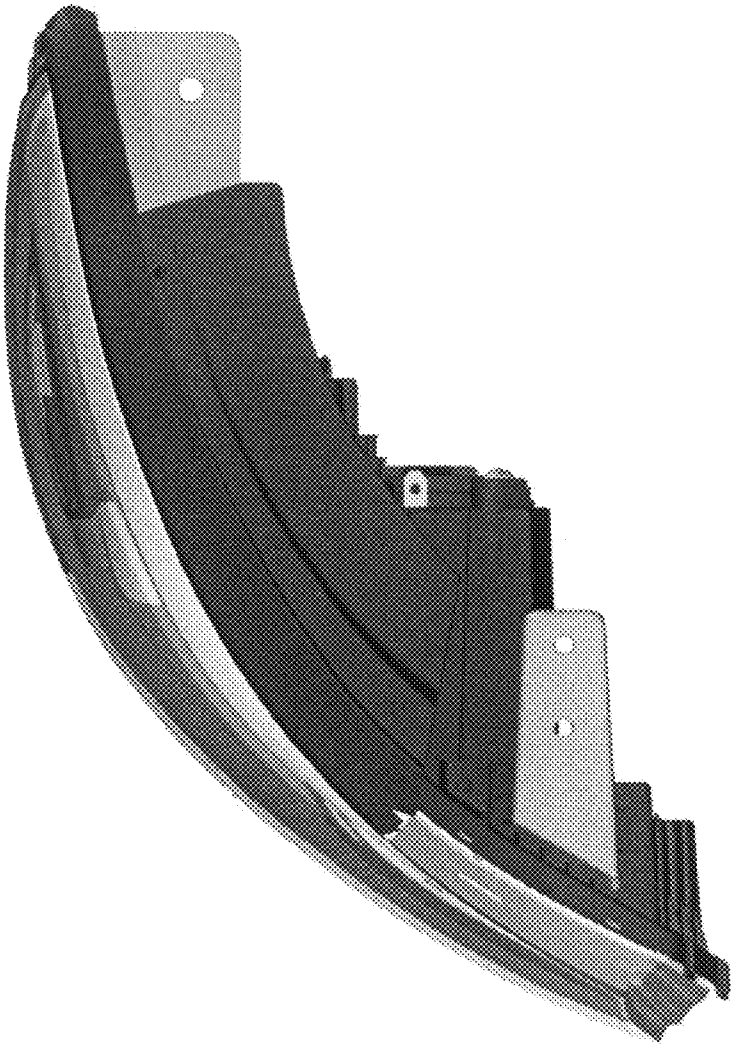
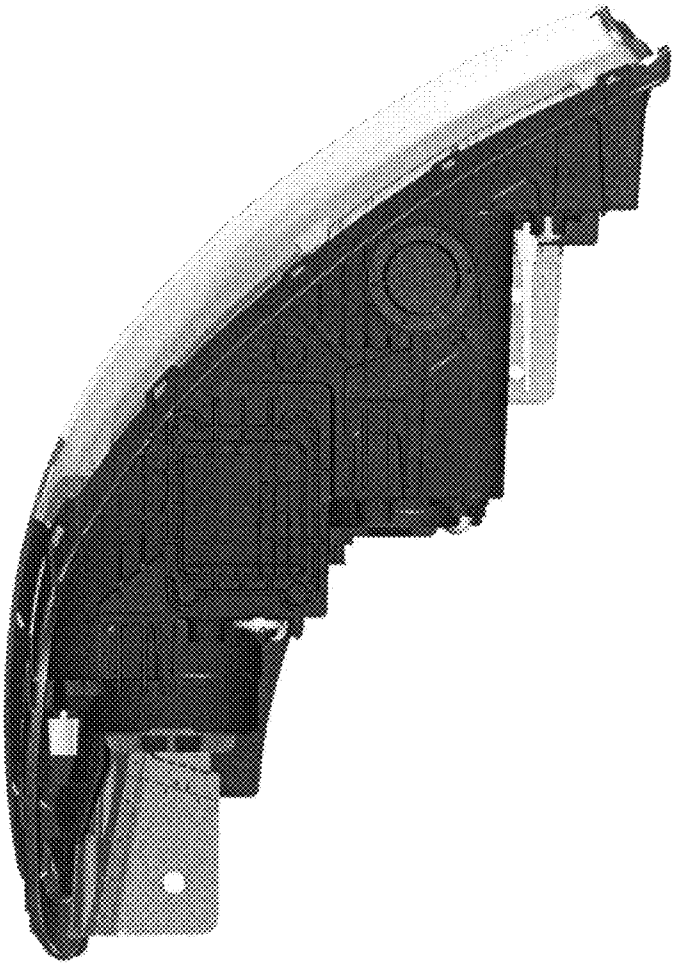
FIG. 7