Dec. 18, 1934. C. B. MIRICK 1,984,379

INTERFERENCE PREVENTION FOR RADIO OPERATED RELAYS

Filed July 9, 1931

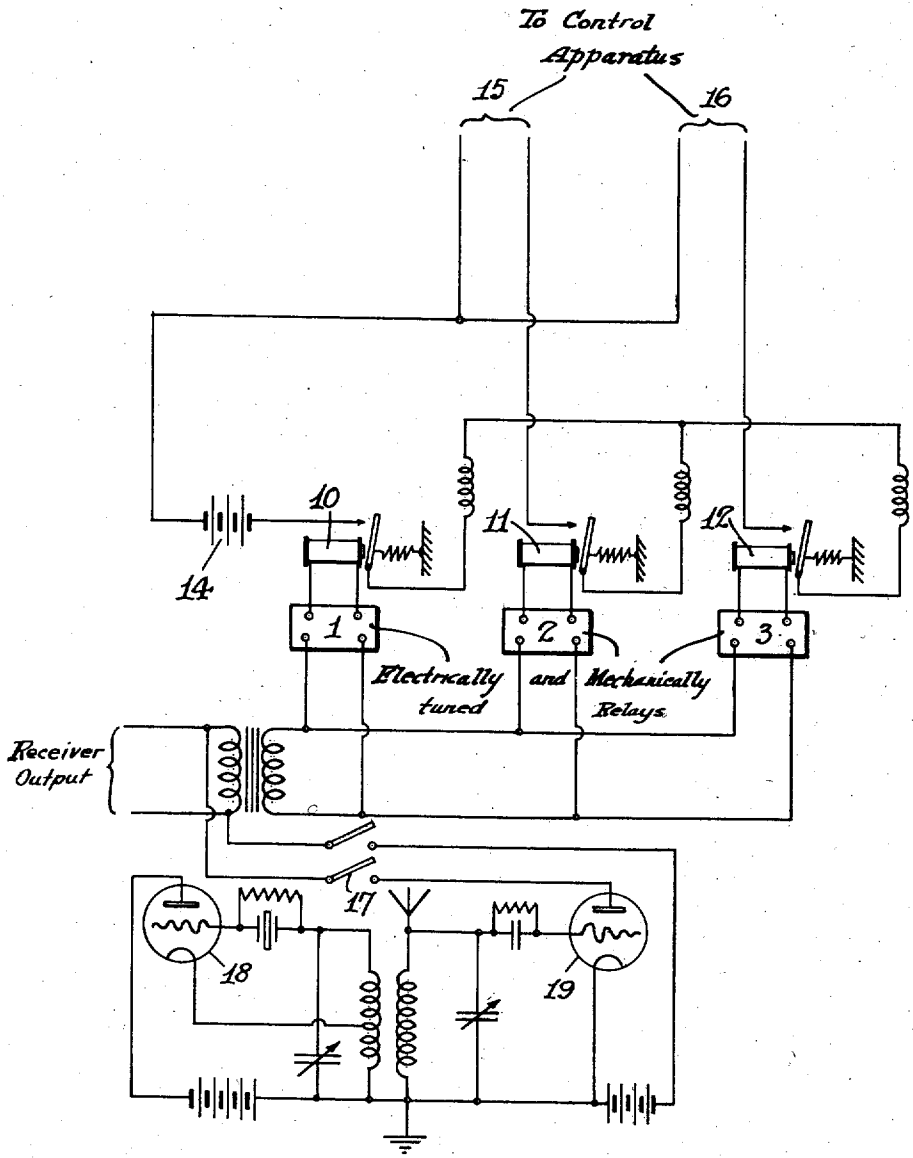

Inventor:

Carlos B. Mirick

by Harold Dodd.

Atty.

Patented Dec. 18, 1934 1,984,379

UNITED STATES PATENT OFFICE

1,984,379

INTERFERENCE PREVENTION FOR RADIO OPERATED RELAYS

Carlos B. Mirick, Washington, D. C.

Application July 9, 1931, Serial No. 549,728

6 Claims. (Cl. 250—2)

(Granted under the act of March 3, 1883, as amended April 30, 1928; 370 O. G. 757)

My invention relates to improvements in the method of and means for guarding radio operated relays against interference, in which a plurality of relays, each responding to a different frequency, must operate simultaneously.

My Patent No. 1,597,416 of August 24, 1926 shows that a system of selection of radio controlled relays can be devised depending upon the selective tuning of mechanically and electrically tuned relays in the output of a receiver. It further shows that such selected relays can be operated simultaneously as well as individually. It is upon this principle that the present invention is based.

The objects of my invention are, first, to provide a method of guarding radio operated relays against interference.

Second, to provide means for guarding radio operated relays against interference.

I practice my method and attain these objects with the apparatus illustrated in the accompanying drawing which is a schematic diagram of the apparatus.

Reference numbers 1, 2 and 3 are selective, mechanically and electrically tuned relays as described in Patent No. 1,597,416. Reference numbers 10, 11 and 12 are electric relays. 13 is the output of a radio receiver. 15 and 16 are control circuits. 14 is a source of electric potential for control circuits 15 and 16.

The operation of my invention is as follows:

A control transmitter is employed that has associated therewith a modulator comprising a plurality of audio frequency oscillators or vibrators that are tuned to frequencies slightly separated, such as 50 cycles. These vibrators are so arranged that the transmitter can be simultaneously modulated by one or more of them, as desired. The receiver has a corresponding number of tuned relays which are responsive respectively to the corresponding frequencies of the vibrators. It is evident that by modulating the transmitter by one or more of the vibrators, the corresponding tuned relays associated with the receiver can be caused to operate. Thus, in the apparatus as shown in the drawing, the three relays 10, 11 and 12 can be selected singly or in pairs by operating the distant radio transmitter. Tuned relays 11 and 12 operate control circuits while tuned relay 10 is connected as a guard relay which must be closed simultaneously with 11 and 12 before potential is supplied to the control circuits which it is desired to operate.

The purpose of this arrangement is to make it necessary to use two frequencies of modulation to operate any control circuit. A single pitch of modulation can be readily identified and interfered with. But two simultaneous tones, particularly if they are in dissonance, are very difficult to identify with the human ear and are correspondingly hard to imitate. It is to be understood that more than two such relays may be associated together to cause the control circuits to be closed, thereby limiting to a greater degree the exact conditions necessary for the control circuits to become complete and thereby obtaining greater security from interference. The importance of this feature increases when such interference is intentional.

It is to be further understood that the so-called output circuits may be used to operate controls or to set up combinations in secondary relays in some one of the many systems of this kind to further protect the selection against interference.

My invention is a protection against interference to relays operated by remote radio transmission, so connected that a plurality of frequencies of modulation must be employed simultaneously or a plurality of locally generated frequencies must be produced by local heterodyne as described in my co-pending application 549,729 of July 9, 1931.

In the above description of my invention it has been assumed that the radio receiver connected to leads 13 was of the type adapted to derive from a modulated carrier frequency the original selective frequencies used to modulate the carrier at the transmitter. When a plurality of unmodulated radio frequency signals are used to control the energization of certain of the relays 10, 11 and 12, it is necessary that these signals be reduced in frequency by the proper amount so that they can be used to operate the relays. This can be accomplished by beating the incoming radio frequencies with a locally generated frequency and separating the beat components corresponding to the different received frequencies from the mingled frequencies by detection. Numerous types of so called heterodyne receivers are adapted to be used with my invention, but for the purpose of illustration a receiver of a type disclosed in my application Serial No. 549,729 filed July 9, 1931, is shown connected by means of a switch 17 to the leads 13 in lieu of a conventional receiver normally connected to the leads 13. This receiver consists of a crystal controlled or other type of local oscillator 18 coupled to an antenna excited detector 19, the heterodyne output of which is used to control the energization of the tuned relays.

The herein described invention may be manufactured and used by or for the Government of the United States for governmental purposes without the payment of any royalties thereon or therefor.

What I claim is:

1. In a system for guarding radio operated relays against interference, when a wave of radio frequency modulated at a plurality of frequencies has been transmitted, received and detected; a first group of tuned electrical systems operable each at a separate predetermined frequency and functioning simultaneously to supply potential to a plurality of control circuits, a plurality of other groups of tuned electrical systems each operable at a separate predetermined frequency, each of said other groups functioning simultaneously with said first group to operate a control circuit, and means for impressing said modulation frequencies simultaneously upon all of said groups of tuned electrical systems.

2. In a system for guarding radio operated relays against interference, when a wave of radio frequency modulated at a plurality of frequencies has been transmitted, received and detected; a first tuned electrical system operable at a predetermined frequency and functioning to supply electrical potential to a plurality of control circuits, a plurality of other tuned electrical systems each operable at a separate predetermined frequency each functioning simultaneously with said first tuned electrical system to operate a control circuit, and means for impressing said modulation frequencies simultaneously upon all of said tuned electrical systems.

3. In a system for guarding radio operated relays against interference when a plurality of undamped waves each at a separate radio frequency have been transmitted, received, combined with a locally generated heterodyne and detected, a first group of tuned electrical systems operable each at a separate predetermined frequency and functioning simultaneously to supply potential to a plurality of control circuits, a plurality of other groups of tuned electrical systems each operable at a separate predetermined frequency, each of said other groups functioning simultaneously with said first group to operate a control circuit, and means for impressing said beat frequencies simultaneously upon all of said groups of tuned electrical systems.

4. In a system for guarding radio operated relays against interference when a plurality of undamped waves each at a separate radio frequency have been transmitted, received, combined with a locally generated heterodyne and detected, a first tuned electrical system operable at a predetermined frequency and functioning to supply electrical potential to a plurality of control circuits, a plurality of other tuned electrical systems each operable at a separate predetermined frequency each functioning simultaneously with said first tuned electrical system to operate a control circuit, and means for impressing said beat frequencies simultaneously upon all of said tuned electrical systems.

5. A method of avoiding radio interference of radio controlled mobile objects comprising; generating a wave of radio frequency, simultaneously modulating said wave at a preselected plurality of separate audio frequencies, receiving and demodulating said wave of radio frequency, and effecting predetermined control operations each in response to the concurrent effect of a different plurality of said preselected separate audio frequencies.

6. A radio dynamic system for selectively actuating any one of a plurality of control devices by the conjoint action of a plurality of waves of different frequencies and guarding against the operation of any one of said control devices by the reception of a single wave of spurious frequency, comprising a first group of tuned electrical systems operable each at a separate predetermined frequency and functioning to simultaneously supply potential to a plurality of control circuits, a plurality of other groups of tuned electrical systems operable each at a separate predetermined frequency different from the frequencies for actuating said first group of tuned electrical systems, each of said other groups functioning simultaneously with said first group to complete control circuits and effect the actuation of control devices only when said groups of tuned electrical systems are energized by a plurality of waves of different frequency at least one of which is the resonant frequency of one of the tuned electrical systems of the first said group and at least another of which is the resonant frequency of one of the tuned electrical systems of one of said groups other than said first group, and means for impressing all of said frequencies simultaneously upon all of said groups of tuned electrical systems.

CARLOS B. MIRICK.