US 20100239987A1

(19) United States

(12) Patent Application Publication

(10) Pub. No.: US 2010/0239987 A1

(43) Pub. Date: Sep. 23, 2010

BAIER

(54) METHOD FOR CONTROLLING A COOKING POINT OF A GAS OVEN AND DEVICE

(75) Inventor: **Martin BAIER**, Ettlingen (DE)

Correspondence Address:
ALSTON & BIRD LLP
BANK OF AMERICA PLAZA, 101 SOUTH TRYON STREET, SUITE 4000
CHARLOTTE, NC 28280-4000 (US)

(73) Assignee: **E.G.O. Elektro-Geraetebau GmbH**

(21) Appl. No.: **12/724,664**

(22) Filed: **Mar. 16, 2010**

(30) **Foreign Application Priority Data**

Mar. 17, 2009 (DE) 10 2009 014 570.2

Publication Classification

(51) **Int. Cl.**
F23N 5/00 (2006.01)
F24C 3/12 (2006.01)

(52) **U.S. Cl.** ..... **431/6**; 126/39 E

(57) **ABSTRACT**

In one embodiment, a method for operating a cooking point with a gas burner of a gas hob is disclosed in which pan detection is provided for switching off the gas burner when the pan is removed, wherein the pan detection unit can detect the re-placement of a removed pan onto the cooking point and then cause a further operation of the gas burner by igniting the gas burner. When the gas burner is ignited after re-placement of the pan, a power level originally set for the gas burner is only achieved after a time delay, thereby preventing any injury to the user.

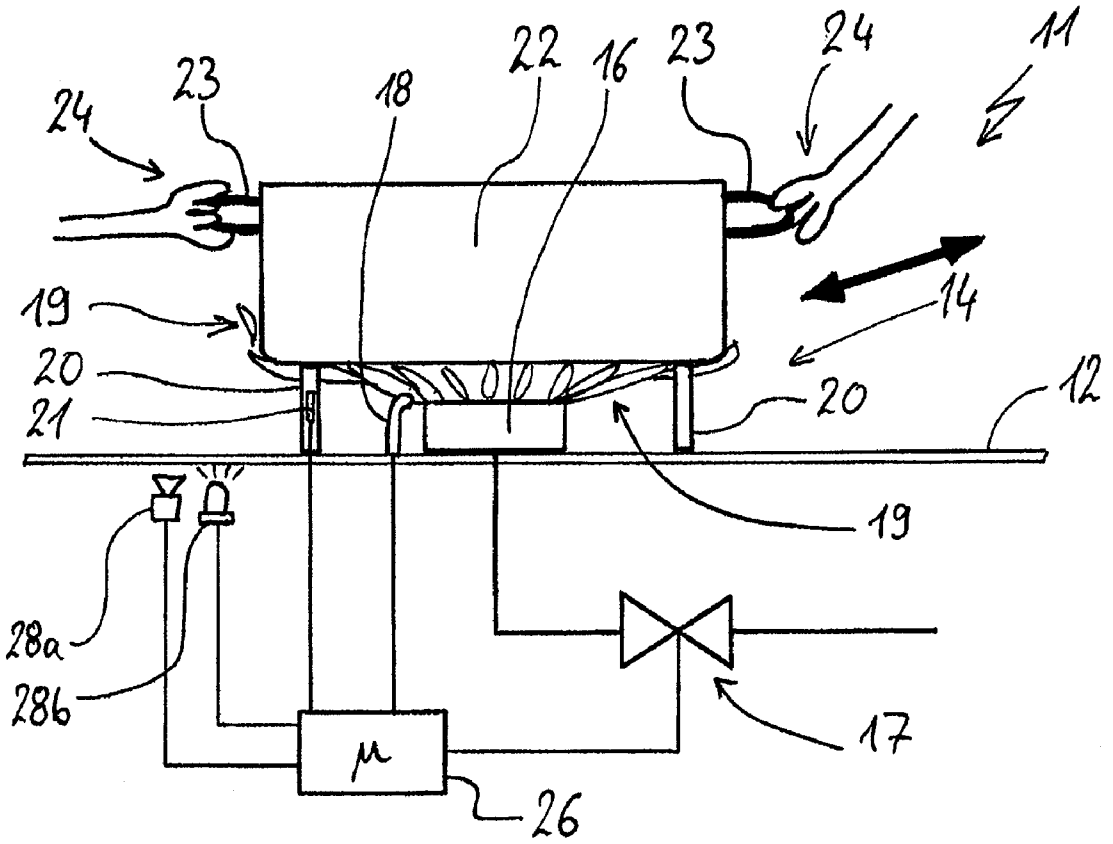

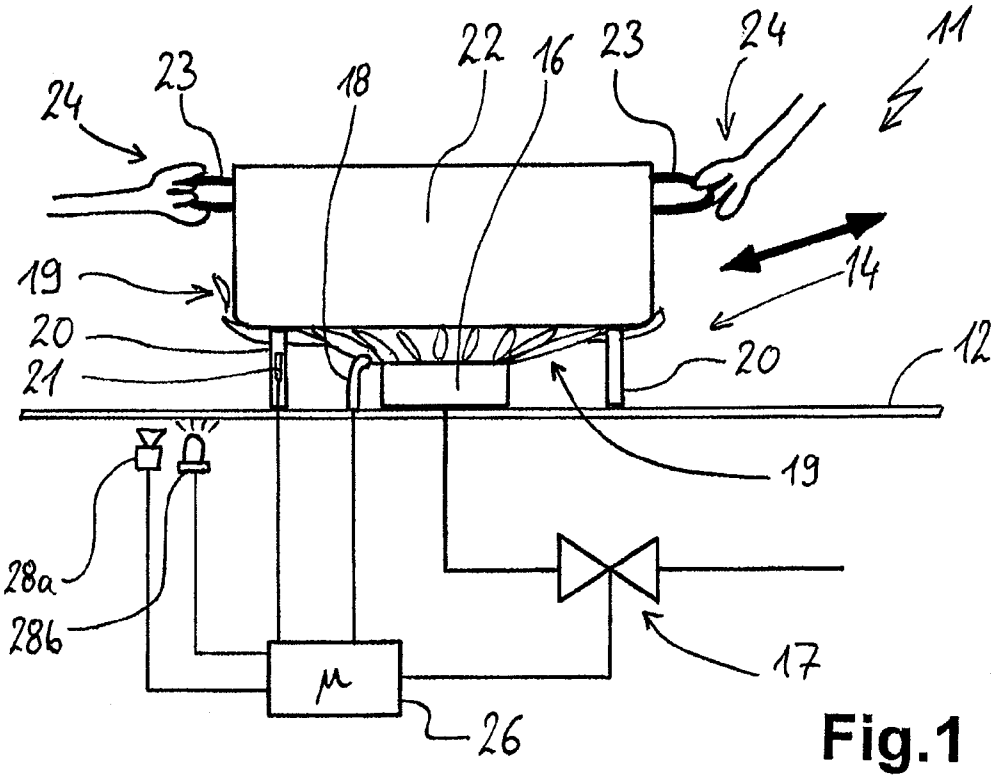
24
23
18
22
16
23
24
11
19
14
20
21
20
12
19
28a
28b
17
μ
26

Fig.1

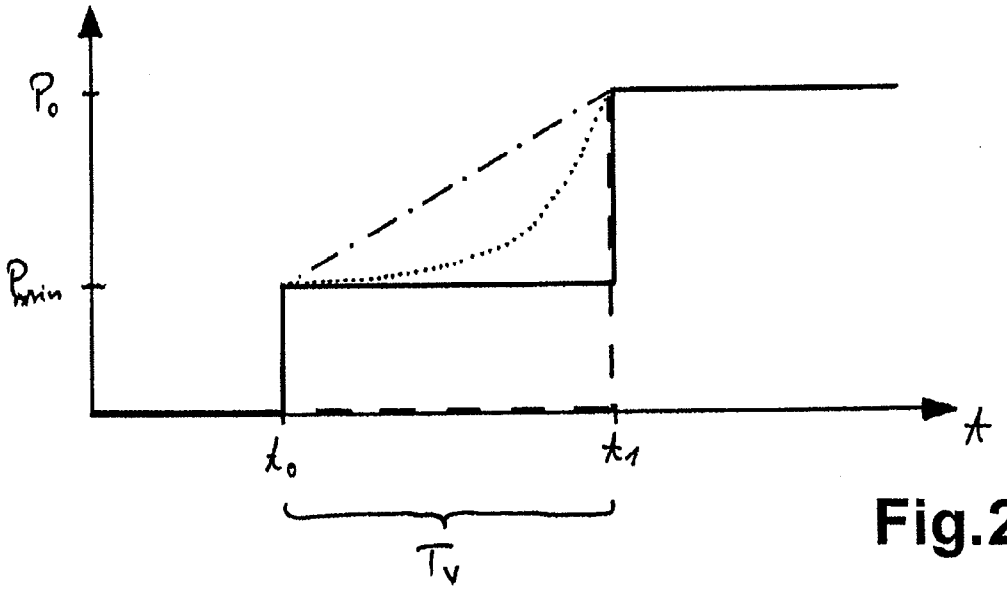
P0
Pmin
t
t0
t1
TV

Fig.2

METHOD FOR CONTROLLING A COOKING POINT OF A GAS OVEN AND DEVICE

CROSS REFERENCE TO RELATED APPLICATIONS

[0001] This application claims priority to German Application Number 10 2009 014 570.2, filed on Mar. 17, 2009, the contents of which are incorporated by reference for all that it teaches.

FIELD OF THE INVENTION

[0002] The invention relates to a method for operating a gas burner at a cooking point, as used in a gas hob. Similarly, the invention relates to a corresponding device.

BACKGROUND OF THE INVENTION

[0003] There are known hobs with pan detection at a cooking point, the pan detection detecting whether a pan has been placed on or removed. With the removal of the pan, the cooking point is switched off, but a power level (i.e., gas output level) that has been set continues to be maintained. If a pan is then placed on again, the burner ignites immediately and, on account of the pressure conditions in the gas system and the delay of the igniting process, a briefly larger gas flame may occur, even reaching to beyond the handles of the pan. The gas flame will at least be of the size of the level that has been set, possibly even larger because of the briefly larger flame. The user must therefore quickly remove his/her hands from the handles of the pan in order not to be burned by the flame.

[0004] One aspect of the invention addresses the problem of providing a method mentioned at the beginning and a corresponding device by which disadvantages of the prior art can be overcome and, in particular, provides more convenient operation of a cooking point with a gas burner with reduced risk of injury.

SUMMARY

[0005] This problem is solved by a method and device with the features as claimed herein. Advantageous and preferred refinements of the invention are the subject of the further claims and are explained in more detail below. The wording of the claims is incorporated in the description by express reference.

[0006] It is provided that, as described above, at the cooking point there is a pan detection, by means of which the gas burner is switched off or a corresponding gas valve on the gas burner is closed when the pan is removed or when the pan detection establishes this. For this purpose, the pan detection may advantageously be formed in the customary way that is known in principle, with capacitive, optical or mechanical systems being suitable in particular. Furthermore, the pan detection together with a control of the cooking point or the gas burner or the gas valve thereof, in particular together with an ignition device for the flame, brings about the effect that the pan detection detects when a pan that has previously been removed is re-placed onto the cooking point. It then reactivates the gas burner by igniting the gas burner and/or opening the gas valve, in order that the cooking process is therefore continued as it were of its own accord after the pan is placed on again.

[0007] According to one aspect of the invention, when the gas burner is ignited, that is to say when the pan has been placed on again, the originally set operation of the gas burner or a power level originally set for the gas burner, only takes place or is reached to the full extent after a certain time delay. A user therefore then has time, at least the time of this delay, to remove his/her hands from the pan again, and in this way the risk of burning is reduced or eliminated.

[0008] Said delay may advantageously be a few seconds, for example half a second to three or even five seconds. For instance, one to two seconds have proven to be advantageous, in order indeed to allow sufficient time on the one hand for the hands to be removed from the pan and on the other hand for a user to see relatively quickly that the cooking point is in operation again, or in turn in order that the cooking process is also not interrupted unnecessarily long.

[0009] According to a one embodiment of the invention, it is possible that the pan detection detects the re-placed pan immediately or only with minimal delay, but the gas burner only ignites at all after said delay of a few seconds. This therefore means that the ignition of the gas burner waits for a short time after detection of the re-placed pan in order that the user can remove his/her hands from the pan. Only after the time delay is the gas burner ignited again. This may take place with a lower power level than that previously set or used. Since, however, a certain time is already available to remove the hands from the pan, re-ignition of the gas burner after the delay may also take place right away with the full power level previously set.

[0010] In another embodiment of the invention, the pan detection may likewise detect the re-placement of the pan immediately or with minimal delay and also ignite the gas burner immediately or as soon as possible. However, this ignition of the gas burner takes place with a power level which, though high enough that the gas burner reliably ignites, is at the same time well below the power level previously set. This immediate ignition advantageously takes place with the lowest possible power level of the gas burner at which reliable ignition occurs. Then, however, the power level is slowly increased, until the power level previously set is reached. This slow increase of the power level proceeds over the aforementioned time delay and may indeed take the few seconds mentioned.

[0011] In the case of this embodiment of the invention, the gas burner is therefore ignited immediately when the re-placed pan is detected and when a user, in all probability, still has his/her hands on the pan. Since, however, the power level used is not the full level previously set, which could possibly lead to burns, but only a lower or the smallest possible level, the risk of burning is in turn reduced or eliminated. By the time the power level is increased to that previously set, the time delay has in turn elapsed and a user has sufficient time to remove his/her hands. A gas flame with a very small or the smallest possible power level will generally not be sufficient to cause burning of the hands holding the pan placed on.

[0012] In the case of this embodiment of the invention, the power level is possibly increased continuously to the value of the power level previously set. In further embodiments, it may first be increased slowly and then to ever increasing degree or finally, also at the end of the delay, be increased abruptly.

[0013] In another embodiment of the invention, it may be provided that the removal of the pan from the cooking point is optically indicated. For this purpose, indicating means such as illuminating source or the like, for example light-emitting diodes, may be arranged in the region of the cooking point. Furthermore, an acoustic signal output may also take place. A

signal output may continue for as long as the pan is removed and at the same time the cooking point has not yet been switched off as a result of a maximum time being exceeded.

[0014] In another embodiment of the invention, it may be provided that, after a maximum time is exceeded, possibly in the range between 3 minutes and 15 minutes, advantageously between 5 minutes and 10 minutes, the readiness of the cooking point is cancelled. For this purpose, the power level setting is cancelled. Therefore, when a pan is placed on again, there is no automatic further operation of the cooking point or automatic switching back on of the gas burner. It may be provided in this respect that first an operating element for the power level setting has to be actuated, that is to say a power level setting has to be manually set again. In this way, the control can reliably detect that a user is again in attendance. In particular, the power level first may be set again right back to zero and subsequently set to the desired degree. Also in this respect it may be provided that such exceeding of the maximum time in the way prescribed is optically and/or acoustically indicated.

[0015] In another embodiment of the invention, an additional safety feature may be provided that a signal is outputted shortly before the gas burner is re-ignited or shortly before the previously set power level is reached. This may be an optical signal or advantageously an acoustic signal. Such a signal may, for example, be generated half a second or a second before the power level originally set is reached when the pan is placed on again and the gas burner is automatically ignited.

[0016] In another embodiment of the invention, when the cooking point is switched off or the gas burner is turned off, in particular when a placed-on pan is removed, a slow turning-off operation takes place, or the power level is as it were slowly brought to zero. This may last a number of seconds, for example two seconds to five seconds. Furthermore, it may at the same time be indicated, once again optically and/or acoustically in the aforementioned way. In particular, such slow turning off may also mean that, after the pan is removed, said few seconds are waited before the power level is brought down or the gas burner is turned off. As a result, the gas burner is not switched off unwantedly, which can result due to a malfunctions or the like when a pan is briefly not detected as placed-on.

[0017] A control in which both the pan detection and the control for the gas valve of the gas burner are integrated together with measurement of the time or the delay may possibly be provided in a central control of a corresponding gas hob. Alternatively, it may be designed as an additional control for certain cooking points.

[0018] The output of a signal, in particular an acoustic signal, before the ignition of the gas burner may have the advantage of detecting an object other than a pan has been placed on, for example a cooking spoon or the like, and warning an operator of the imminent ignition of the gas burner. Then, the object inadvertently placed on can be removed again thus avoiding an accident.

[0019] These and further features are evident not only from the claims, but also from the description and the drawings, where the individual features can be realized in each case by themselves or as a plurality in the form of sub-combinations in an embodiment of the invention and in other fields and can constitute advantageous and inherently protectable embodiments for which protection is claimed here. The subdivision of the application into individual sections and subheadings do not restrict the general validity of the statements made thereunder.

BRIEF DESCRIPTION OF THE DRAWINGS

[0020] Exemplary embodiments of the invention are illustrated schematically in the drawings and are explained in greater detail below. In the drawings:

[0021] FIG. **1** shows a side view of a gas hob according to one embodiment of the invention with a device for the time-delayed ignition of a gas burner of a cooking point and

[0022] FIG. **2** shows a diagram of one embodiment of the power progression over time for various ways of increasing the power.

DETAILED DESCRIPTION OF THE EXEMPLARY EMBODIMENTS

[0023] FIG. **1** illustrates a gas hob **11** as a device according to the invention, on which the method according to the invention can be carried out. The gas hob **11** has a conventional hob panel **12**, and a cooking point **14** thereof is illustrated. The cooking point **14** has a conventional gas burner **16** with a gas valve **17** arranged under the hob panel **12**, from which valve said burner is supplied. Provided at the gas burner **16** is an ignition device **18** and advantageously a monitoring device (not illustrated) for the gas flames **19**. An essentially conventional pan support **20**, on which a pan **22** is placed over the gas burner **16** and the cooking point **14**, is also provided. This pan support has yet further functions, as still to be explained below. As usual, the pan has side handles **23**, which are being gripped by hands **24** of the user, for example because said user has just placed the pan **22** on again.

[0024] Provided on the gas hob **11** is a controller **26**, which is connected not only to the gas valve **17**, for the activation thereof, and to the ignition device **18** but also, though not of any consequence here, to a possible flame monitor. Furthermore, the controller **26** is connected to a pan detection device, which is not described in any more detail but is formed as a known reflex light barrier and is arranged underneath the hob panel **12**. Furthermore, the controller **26** is connected to signal transmitters under the hob panel **12**, such as an acoustic signal transmitter **28***a* and an optical signal transmitter **28***b*. It is also possible to omit the signal transmitters or to provide only one of the two.

[0025] When the pan **22** is removed from the cooking point **14**, as the thick arrow indicates, the pan detection device **21** together with the controller **26** detects this. The latter then closes the gas valve **17**, so that the gas burner **16** goes out or the gas flames **19** are extinguished. If the pan **22** is then placed on again with the hands **24** on the handles **23**, the pan detection device **21** detects the pan **22**. This then corresponds to the point in time t_0 in the diagram of the power P over the time t according to FIG. **2**, to be specific when the power of the gas burner **16** is increased from zero, that is when the gas valve **17** is closed. Here there may be an abrupt increase according to the solid line to a power P_{min}, which is chosen such that it is the minimum power or minimum power level or minimum amount of gas with which the gas burner **16** can ignite and burn. Up until the point in time t_1, which is reached after a delay time T_V, which is the delay time mentioned at the beginning, there may be a few seconds, advantageously one to two seconds. Over this delay time T_V, the power P is then not increased over the minimum power P_{min}, as shown by the

solid line. This only happens abruptly at the point in time t_1, and then specifically to the power originally set P_0. This power P_0 was the power before the pan **22** was removed. During the delay time T_v, an operator therefore has sufficient time after placing the pan **22** onto the cooking point **14**, that is the said one to two seconds, to remove the hands **24** again from the region in which the gas flames **19** can come. Although the gas burner **16** ignites again, the gas flames **19** scarcely reach over the base of the pan **22** to the sides and up to the handles **23** or the hands **24**, since said burner operates with the lowest possible minimum power.

[0026] As an alternative to keeping to the minimum power P_{min} along with an abrupt increase, the power may, as from the point in time t_0, first increase slightly and then ever more quickly as shown by a dotted curve in the manner of a parabola or non-linearly. As a result, it can also at the same time be signalled to a user that not only has re-ignition taken place but there has also been an increase in the power automatically beyond the minimum power P_{min}. The user therefore does not have to worry that the cooking point **14** is malfunctioning.

[0027] In another alternative embodiment, the increase in output level as from the point in time t_o may take place uniformly as shown by the dash-dotted representation. Although an increase in the burning power once again takes place here somewhat more quickly than in the case of the two previous curves, it is still always in such a way that, for example after the elapse of a time $T_v/2$ after the point in time t_0, there is still a much lower power than the power previously set P_0.

[0028] In yet a further alternative refinement of the method, at the point in time t_0, the gas burner **16** is still out or the gas valve **17** is closed. Only at the point in time t_1, that is after the delay time T_v, is the gas burner **16** ignited by opening of the gas valve **17** and actuation of the ignition device **18**, then however right away as shown by the dashed curve with the full pre-set power P_0. This has the advantage that even a possibly existing risk of burning caused by a gas flame with the low minimum power P_{min} is eliminated, since indeed there are still no gas flames **19**. At the same time, it must then be noted however that the re-ignition of the gas burner **16** at the point in time t_1 then takes place with the full pre-set power P_0 and abruptly.

[0029] As explained previously, an acoustic and/or optical signal output by the signal transmitters **28***a* and **28***b* may take place at a point in time t_0, t_1 or a point in time in between. This may signal re-ignition of the gas burner **16**, that the full power previously set P_0 will soon be reached or has been reached, or something similar.

1. A method for operating a cooking point with a gas burner of a gas hob comprising:

switching off the gas burner by a pan detection unit by switching off the gas burner by closing a corresponding gas valve when a pan is detected initially at the cooking point and then detected as being removed at the cooking point;

detecting by the pan detection unit when a removed pan is re-placed onto the cooking point; and

causing a renewed operation of the gas burner by igniting the gas burner by opening the gas valve, wherein, when the gas burner is ignited after the pan is placed on said cooking point again, wherein the set power level originally set for the gas burner only takes place to the full extent with a delay.

2. The method as claimed in claim **1**, wherein the delay is half a second to five seconds.

3. The method as claimed in claim **1**, wherein the pan detection unit detects immediately when said pan is placed on again and only re-ignites the gas burner again after the time delay.

4. The method as claimed in claim **3**, wherein said re-ignition of the gas burner after the delay takes place with the power level previously set.

5. The method as claimed in claim **1**, wherein the gas burner is ignited immediately when said pan is placed on again, or immediately after detection of said pan occurs by the pan detection unit, with a power level which lies below the power level previously set, the power level then being increased up to the power level previously set over the time period of the delay.

6. The method as claimed in claim **5**, wherein the gas burner is ignited with a power level in the range of the minimum power required for the ignition of the gas burner and followed by increasing the power level of the gas burner.

7. The method as claimed in claim **1**, wherein removal of the pan from the cooking point is optically indicated.

8. The method as claimed in claim **7**, wherein the removal of the pan is optically indicated by an illumination source.

9. The method as claimed in claim **1**, wherein a signal is output shortly before re-ignition of the gas burner.

10. The method as claimed in claim **1**, wherein the signal is an acoustic signal.

11. The method as claimed in claim **1**, wherein, after a maximum time is exceeded, the power level setting is cancelled and operation of the cooking point when the pan is replaced does not take place automatically but wherein a power level is manually set.

12. The method as claimed in claim **11**, wherein the power level is set by manually resetting the power level to zero and subsequently increasing the power.

13. The method as claimed in claim **11**, wherein the maximum time is three minutes to fifteen minutes.

14. The method as claimed in claim **1**, wherein slow turning-off with a turning-off time of a few seconds is provided for switching off the cooking point by turning off the gas burner.

15. The method as claimed in claim **14**, wherein the turning off takes place with one or more of an optical or acoustic indication taking place at the same time.

16. An apparatus for operating a cooking point of a gas burner of a gas hob comprising:

a pan detection unit for detecting the presence of a pan on said cooking point;

a gas valve configured to control the flow of gas provided to said gas burner of said cooking point; and

a controller configured to receive a first signal from said pan detection unit indicating the presence of said pan, said controller configured to close said gas valve from a set value when removal of said pan is determined from a second signal received from said pan detection unit, said controller configured to open said gas valve when a third signal is received from said pan detection unit indicating replacement of said pan onto the cooking point, wherein said gas valve is opened to said set value after a time delay.

* * * * *