Oct. 16, 1945. J. P. PUTNAM 2,386,976

METHOD OF FLATTENING CURLY POLYMERIZED STYRENE SHEETS

Filed Oct. 14, 1943

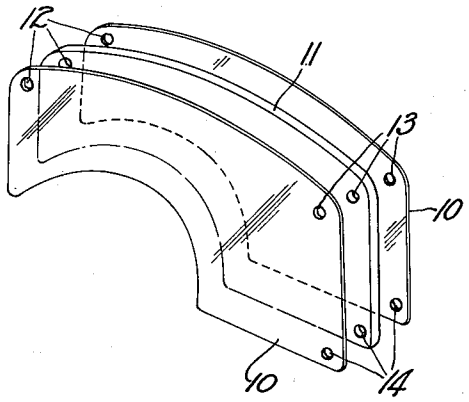

Fig. 1

Fig. 2

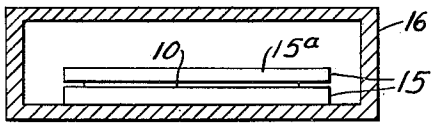

INVENTOR:
John P. Putnam
by Dike, Calver & Porter
Attys

Patented Oct. 16, 1945 2,386,976

UNITED STATES PATENT OFFICE

2,386,976

METHOD OF FLATTENING CURLY POLYMERIZED STYRENE SHEETS

John P. Putnam, Boston, Mass., assignor to The Reece Button Hole Machine Company, Boston, Mass., a corporation of Maine

Application October 14, 1943, Serial No. 506,278

1 Claim. (Cl. 18—48)

This invention relates to electrical condensers and more particularly to condensers having dielectric coatings on the opposite faces of their plates.

Polymerized styrene, commercially known as "polystyrene," is eminently suited as a dielectric coating material for condenser plates, not only because it is available at fairly low cost in the form of sheeting of very uniform thickness throughout and has a very low power factor, but also because it is to all intents and purposes waterproof and, hence, protects the condenser plates from the corroding effects of moisture. The application of polystyrene to the opposite faces of condenser plates has, however, presented many difficulties. Thus, spraying polystyrene on the opposite faces of condenser plates is unsatisfactory in that it results in coatings which are nonuniform in thickness and subject to breakdown in isolated places, leading to an early break-down of a condenser. The application of polystyrene in sheet or film form to the opposite faces of condenser plates, by cementing, for instance, proved to be unsatisfactory, primarily because polystyrene in sheet form resisted all attempts to flatten them permanently before their application to condenser plates. Commercial polystyrene in sheet form is never entirely flat due to internal stresses, and has an inherent tendency to buckle which becomes particularly noticeable after its attachment to condenser plates and subjection to the varying temperature conditions in a condenser in use. All previous attempts to produce an even and continuous bond between the polystyrene sheets and the metallic faces of condenser plates, which would not be ruptured in places by reason of the buckling tendency of the polystyrene sheets and the different coefficients of expansion of the latter and the condenser plates, were unsuccessful.

The present invention has for its object to provide a method whereby polystyrene sheets which are so thin as to tend to buckle or curl may be permanently flattened. The invention will be best understood from the following description of a preferred mode of carrying the same into effect as illustrated in the accompanying drawing, in which:

Fig. 1 perspectively illustrates a condenser plate and two polystyrene sheets to be applied thereto after flattening by the present method.

Fig. 2 is a section through an oven in which the styrene sheets are flattened in accordance with the present method.

Referring to the drawing and particularly to Fig. 1 thereof, there are shown two identical, precut blanks 10 of polymerized styrene which are to be secured to the opposite faces of a metal condenser plate 11. The blanks 10, as well as the condenser plate 11, are provided with series of aligned holes 12, 13 and 14 for the purpose of mounting the finished condenser plate in a condenser.

The blanks 10 of polymerized styrene are inherently wavy due to internal stresses, and these stresses must be removed and the blanks 10 thoroughly flattened if, on attachment to the condenser plate, they are to remain perfectly flat thereon under varying temperature conditions, as required. To this end, both blanks 10 may be placed side by side between the preferably polished faces of a pair of plates 15 of steel or any other suitable material, the top plate 15a of which is comparatively light in weight, or at any rate too light to produce cold flow of the blank material. The plates 15 with the interposed blanks 10 are next subjected for several hours, preferably more than three hours, to a temperature of approximately 170° F. To this end, the plates 15 and the interposed blanks 10 may be placed in an oven 16 wherein the temperature is kept approximately at 170° F. At the end of the heating process, the oven is permitted to cool slowly while the plates 15 and interposed blanks 10 remain therein until they reach substantially room temperature. The blanks 10, when then removed from the plates 15, are free from such internal stresses as would warp them, and they are flat and stay flat. Slow and uniform cooling of the blanks 10, preferably while between the plates 15, is essential if the heat-treated blanks are to be free from internal stresses and absolutely flat. It has been found practical to shut off the heat in the oven after the blanks 10 have been subjected to a temperature of approximately 170° F. for the required length of time, and to leave the plates 15 with the interposed blanks 10 in the oven while the same is permitted slowly to cool down overnight substantially to room temperature.

For some purposes it is found expedient to employ on the opposite faces of condenser plates very thin dielectric coatings of a few mils in thickness. Polymerized styrene blanks of such small thickness curl up badly, so much, in fact, that their flat placement between plates, such as the plates 15 in Fig. 2 for the described heat treatment, is difficult for an operator. To facilitate this task, a very thin and curling blank of polymerized styrene is, while preferably held sub-

stantially flat on one of the plates 15, briefly rubbed with a dissimilar substance, such as a dry silk cloth, for instance, in order to build up an electrostatic charge on the blank, whereby the latter is retained flat on said plate for some time by electrical attraction thereto. While the electrostatically charged blank is thus retained flat on one of the plates 15 by electrical attraction, the other plate 15 is superposed on the blank with ease.

I claim:

Method of permanently flattening a sheet of polymerized styrene which is so thin that it normally curls up, which comprises subjecting said sheet for several hours to a temperature of approximately 170° F. while placed between plates sufficiently light in weight to prevent cold flow of the sheet material, and causing said sheet gradually to cool substantially to room temperature over a period of several hours while between said plates.

JOHN P. PUTNAM.