Office de la Propriété Intellectuelle du Canada
Un organisme d'Industrie Canada

Canadian Intellectual Property Office
An agency of Industry Canada

CA 2192012 C 2005/11/22

(11)(21) 2 192 012

(12) BREVET CANADIEN
CANADIAN PATENT

(13) C

(22) Date de dépôt/Filing Date: 1996/12/04

(41) Mise à la disp. pub./Open to Public Insp.: 1997/06/14

(45) Date de délivrance/Issue Date: 2005/11/22

(30) Priorité/Priority: 1995/12/13 (1001890) NL

(51) Cl.Int.^{6}/Int.Cl.^{6} A61B 17/36, A61B 5/0464, A61B 5/042

(72) Inventeurs/Inventors:
SIEKMAYER, GERD, DE;
VAN ERP, WILHELMUS PETRUS MARTINUS MARIA, NL

(73) Propriétaire/Owner:
CORDIS CORPORATION, US

(74) Agent: SIM & MCBURNEY

(54) Titre : CATHETER AVEC RESEAUX D'ELECTRODES EN FORME DE PLAQUE
(54) Title: CATHETER WITH PLATE-LIKE ELECTRODE ARRAY

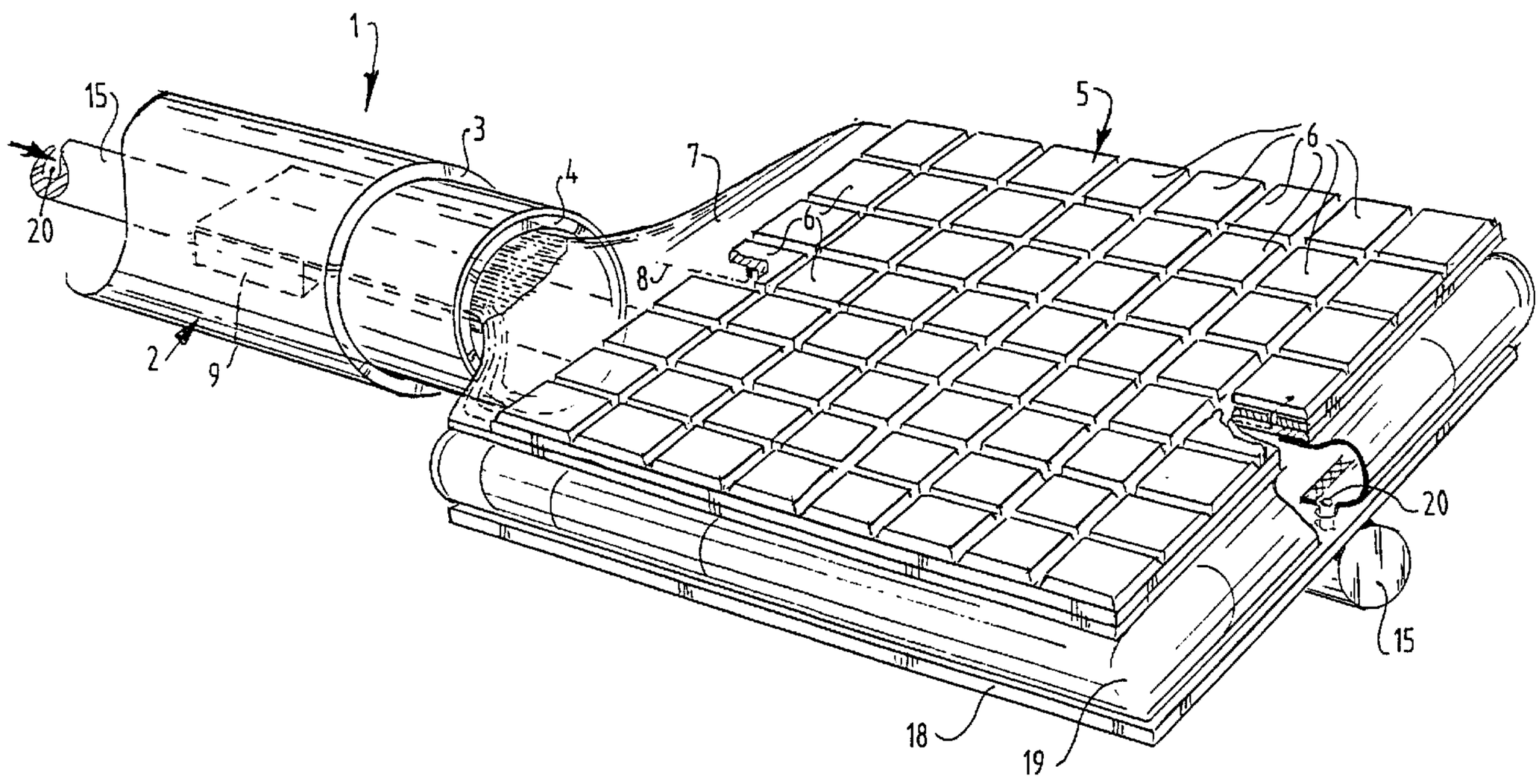

(57) Abrégé/Abstract:
The invention relates to a catheter. This catheter comprises a tube-like basic body with a proximal end and a distal end, a connecting member arranged at the proximal end and an electrode array carried at the distal end. The electrode array is plate-like and arranged on a pliable carrier which can be moved between a folded state and an unfolded state transversely to the catheter. Folding means have been arranged for the purpose of moving the carrier between the folded state and the unfolded state. Furthermore the catheter comprises signal lines connected with the electrode array and extending to the proximal end.

ABSTRACT

The invention relates to a catheter. This catheter comprises a tube-like basic body with a proximal end and a distal end, a connecting member arranged at the proximal end and an electrode array carried at the distal end. The electrode array is plate-like and arranged on a pliable carrier which can be moved between a folded state and an unfolded state transversely to the catheter. Folding means have been arranged for the purpose of moving the carrier between the folded state and the unfolded state. Furthermore the catheter comprises signal lines connected with the electrode array and extending to the proximal end.

The invention relates to a catheter comprising a tube-like basic body with a proximal end and a distal end. In the usual manner a connecting member has been arranged at the proximal end. At the distal end the catheter carries an electrode array. In the state of use measurements of the electrical activity of the heart can for instance be taken with the electrodes of the electrode array.

In the case of a tachycardia for instance, it is desirable to form a clear picture of the electrical activity in certain sections of the internal wall of the heart. When this picture has been obtained, ablation can be carried out locally in order to remedy the tachycardia.

According to one aspect of the present invention, there is provided an intraventricular multielectrode cardiac mapping probe comprising a catheter having an open proximal end, an open distal end, and a lumen confluent with said open proximal end and said open distal end; an elongate inner tubing slidably received and movable within said lumen of said catheter, said tubing having a distal end, a proximal end and a lumen extending through the length thereof; a plurality of elongate insulated conductor assemblies mounted within said lumen of said elongate inner tubing; and, an electrode array assembly including a flexible electrode carrier mounted on and carried by the distal end of the inner tubing and having a plurality of spaced-apart electrodes mounted on a face of said electrode carrier, each of said electrodes being in electrical continuity with one of said conductor assemblies, said electrode carrier being in a folded configuration and being positioned within the lumen of the catheter, the electrode carrier exhibits the characteristic that upon being released it returns to its original preformed generally planar configuration so that when the distal end of the catheter is placed in a desired position within the heart chamber the inner tubing may be slidably moved toward the distal end of the catheter to thereby cause the electrode array assembly to move out of the distal end of the catheter thereby causing the electrode array to expand from its retracted folded position within the lumen of the catheter to its preformed generally planar configuration outside of the catheter to thereby permit the measurement of electrical potentials at different points along the surface of the endocardial wall of the heart chamber; wherein the electrode array assembly is comprised of a planar sheet of shape memory material in which the folded state occurs at less than about 45° centigrade and the unfolded generally planar state occurs at a temperature above about 45° centigrade.

In accordance with another aspect of the present invention, there is provided an intraventricular multielectrode cardiac mapping probe comprising: a catheter having an open proximal end, an open distal end, and a lumen confluent with said open proximal end and said open distal end; an elongate inner tubing slidably received and movable within said lumen of said catheter said tubing having a distal end, a proximal end and a lumen extending through the length thereof; a plurality of elongate insulated conductor assemblies mounted within said lumen of said elongate inner tubing; and an electrode array assembly including a flexible electrode carrier mounted on and carried by the distal end of the inner tubing and having a plurality of spaced-apart electrodes mounted on a face of said electrode carrier, each of said electrodes being in electrical continuity with one of said conductor assemblies, said electrode carrier being in a folded configuration and being positioned within the lumen of the catheter, the electrode carrier exhibits the characteristic that upon being released it returns to its original preformed generally planar configuration so that when the distal end of the catheter is placed in a desired position within the heart chamber the inner tubing may be slidably moved toward the distal end of the catheter to thereby cause the electrode array assembly to move out of the distal end of the catheter thereby causing the electrode array to expand from its retracted folded position within the lumen of the catheter to its preformed generally planar configuration outside of the catheter to thereby permit the measurement of electrical potentials at different points along the surface of the endocardial wall of the heart chamber; wherein the electrode array assembly is rolled up along a longitudinal axis of the catheter in the folded configuration.

In accordance with a further aspect of the present invention, there is provided an intraventricular multielectrode cardiac mapping probe comprising a catheter having an open proximal end, an open distal end, and a lumen confluent with said open proximal end and said open distal end; an elongate inner tubing slidably received and movable within said lumen of said catheter, said tubing having a distal end, a proximal end and a lumen extending through the length thereof; a plurality of elongate insulated conductor assemblies mounted within said lumen of said elongate inner tubing; and an electrode array assembly including a flexible electrode carrier mounted on and carried by the distal end of the inner tubing and having a plurality of spaced-apart electrodes mounted on a face of said electrode carrier, each of said electrodes being in electrical continuity with one of said conductor assemblies, said electrode carrier being in a folded configuration and being positioned within the lumen of the

catheter, the electrode carrier exhibits the characteristic that upon being released it returns to its original preformed generally planar configuration so that when the distal end of the catheter is placed in a desired position within the heart chamber the inner tubing may be slidably moved toward the distal end of the catheter to thereby cause the electrode array assembly to move out of the distal end of the catheter thereby causing the electrode array to expand from its retracted folded position within the lumen of the catheter to its preformed generally planar configuration outside of the catheter to thereby permit the measurement of electrical potentials at different points along the surface of the endocardial wall of the heart chamber; wherein the electrode array assembly includes a resilient, compressible cushion interposed between the electrode carrier and the electrodes to thereby urge the electrodes against the interior wall of the heart when the electrode array assembly is in a performed generally planar configuration.

In accordance with a yet further aspect of the present invention, there is provided an intraventricular multielectrode cardiac mapping probe comprising: a catheter having an open proximal end, an open distal end, and a lumen confluent with said open proximal end and said open distal end; an elongate inner tubing slidably received and movable within said lumen of said catheter, said tubing having a distal end, a proximal end and a lumen extending through the length thereof; a plurality of elongate insulated conductor assemblies mounted within said lumen of said elongate inner tubing; and an electrode array assembly including a flexible electrode carrier mounted on and carried by the distal end of the inner tubing and having a plurality of spaced-apart electrodes mounted on a face of said electrode carrier, each of said electrodes being in electrical continuity with one of said conductor assemblies, said electrode carrier being in a folded configuration and being positioned within the lumen of the catheter the electrode carrier exhibits the characteristic that upon being released it returns to its original preformed generally planar configuration so that when the distal end of the catheter is placed in a desired position within the heart chamber the inner tubing may be slidably moved toward the distal end of the catheter to thereby cause the electrode array assembly to move out of the distal end of the catheter thereby causing the electrode array to expand from its retracted folded position within the lumen of the catheter to its preformed generally planar configuration outside of the catheter to thereby permit the measurement of electrical potentials at different points along the surface of the endocardial wall of the heart chamber; wherein the electrode array assembly includes at least two wires with a sheet of foil

extending between said wires and the spaced-apart electrodes being mounted on the sheet of foil.

According to the invention a catheter is provided with which at one go a measurement can be taken over a large area and/or an ablation carried out.

The catheter can be introduced into the patient with the electrode array in folded state, so that it has a relatively small diameter. When the electrode array has been positioned in the target position, the carrier is unfolded, so that the electrode array can be operative over the entire surface area.

In the catheter, the basic body comprises an outer tube-like body with a central lumen, which has a bore which is at least marginally larger than the cross-section of the electrode array in folded state and the carrier is movable between a retracted position in folded state inside the central lumen and a position extended from there, and where retraction means have been arranged for the purpose of moving the carrier between the retracted and the extended position. On introducing the catheter, the electrode array is kept in the retracted state in order to prevent traumata. Once it has arrived at the target position, the electrode array is extended and subsequently unfolded, so that it becomes operative.

The basic body comprises an inner tube-like body movable inside the central lumen of the outer tube-like body and the carrier has been arranged at the distal end of the inner tube-like body. Extending and retracting the electrode array can be effected in a properly controlled manner by moving the inner tube-like body in relation to the outer tube-like body at the proximal end of the catheter.

In order to restore the electrode array to the folded state, the carrier is elastically deformable and is relatively relaxed in the unfolded state and wherein guiding means have been arranged at the distal end of the outer tube-like body for the purpose of moving the carrier from the unfolded into the folded state during the change from the extended into the retracted position. The guiding means can for instance be somewhat funnel-shaped, so that on retracting the electrode array a force working inwards is applied to it in order to bring about the folded state.

The carrier comprises a sheet of memory metal of which the folded state is a relatively relaxed state at body temperature and the unfolded state a relatively relaxed state at

a higher temperature and wherein the carrier is provided with heating means which are connected to a supply line extending to the proximal end. The sheet of memory metal can easily be brought into the unfolded and folded state, controlled from the proximal end, by activating the heating means via the supply line. With the heating means switched on, the carrier assumes the unfolded state and when the heating means are switched off, the carrier of memory metal is folded.

To ensure that the electrode array and the carrier have a relatively small diameter in the folded state, the electrode array and the carrier are rolled up around a longitudinal axis in the folded state. As a result the electrode array can have a relatively large surface area. The width of the electrode array can measure a number of times the diameter of the catheter.

Selectively switching off the heating means will first fold a section of the carrier corresponding to one of the separate sections of the heating means and subsequently, one by one, successive sections, so that a programmed folding movement is achieved, which facilitates folding the carrier, together with the electrode array, in a reliable manner into a small diameter.

A resilient, compressible cushion may be arranged in between the electrode array and the carrier. The resilient, compressible cushion ensures that the electrode array can be placed evenly against, in particular, the wall of the heart. Even when, in the unfolded state, the carrier does not extent entirely parallel to this wall of the heart, a good contact between all electrodes and the wall of the heart is achieved after all.

In the unfolded state the bag can be filled with fluid in order to achieve the desired resilient compressibility, and prior to folding the fluid is removed from the bag, so that in the folded state the electrode array will have a minimal cross-section.

The carrier may be a pliable sheet such as a piece of foil, which is connected with at least two sides to elastic wire like elements, wherein the sheet together with the wire like elements can be extended from the basic body and the wire like elements push, in the extended state, the sides apart in a resilient manner. On extending the pliable sheet, the wire like elements will spring outwards, as a result of which the sheet is stretched and the electrode array will lie in one plane.

The wire-like elements may extend through the basic body past the proximal end and are, at that point, provided with operating means for the purpose of rotating them around their longitudinal axis. By rotating the wire like elements, the sheet can be given a curved shape in order to be able to fit it more accurately to the surface to be treated. Thus a good contact is achieved between the electrodes and the surface to be treated.

The sheet may be connected to a rotatable pin at a point in between the sides, which extends through the basic body past the proximal end and is provided at that point with operating means for the purpose of rotating it around its longitudinal. By rotating the pin the sheet is wound around this pin and at the same time the wire like elements are pulled towards the centre, so that the entire device is gathered on a small diameter so that it can easily be retracted inside the basic body.

The carrier may be an inflatable balloon. By making the balloon swell up, for instance by inflating it, the electrode array is unfolded and can be brought into contact with a surface to be treated.

In order to protect the balloon during the introduction of the catheter, the balloon is connected with a distal end to an elongated body extending through the basic body in a movable manner, which can be used to pull the balloon into or extend it from the basic body. In the retracted state of the balloon, the latter is stored away in a protected manner inside the basic body.

When the carrier comprises a balloon, the balloon comprises a partition running parallel to a wall carrying the electrode array and the compartments formed by this partition can be supplied with fluid under pressure via separate lines extending to the proximal end. The shape of the balloon can be influenced by a varying filling pressure of the compartments. The compartment which is turned away from the electrode array can for instance be inflated hard, whereas the compartment on the side of the electrode array is kept much softer, as a result of which a good contact is obtained between the electrode array and the surface to be treated, whilst at the same time the entire device is sufficiently firm to guarantee a good contact.

A multiplexer may be received in the basic body close to the distal end, which is connected with each of the electrodes of the electrode array on one side, and to the signal lines on the other side. As a result a large number of electrodes can be employed over a

relatively large surface area of the electrode array, without it resulting in a proportionally large number of signal lines extending through the basic body of the catheter. From the multiplexer only one signal line needs to run to the proximal end.

The multiplexer can be made in such a way that it can also transmit ablation energy from the proximal end to selected electrodes of the electrode array, in order to be able to carry out a programmed ablation pattern using the electrode array.

A reliable embodiment of the catheter according to the invention, in which case the electrode array has once again a minimal thickness in order to have a minimal diameter in the folded state, is provided wherein the electrode array comprises a foil substrate, and connecting lines of the electrodes with the multiplexer have been made in the form of printed wiring on the foil substrate.

The electrodes may be formed as printed wiring on the foil substrate on the other side form the connecting lines and the connecting lines are connected with the electrodes via metallized openings in the foil substrate. By arranging the connecting lines on the other side of the foil substrate than the electrodes, the electrodes can be arranged in a closely fitting manner, so that a very good measurement over the entire surface of the electrode array can be obtained and also, if the catheter has been fitted out for that purpose, an accurate ablation can be carried out over the entire surface of the electrode array.

The multiplexer may be arranged on foil substrate in order to minimize the space occupied by the multiplexer.

To enable pushing the electrode array sufficiently firm against the tissue to be investigated and treated respectively, the carrier may be connected with a rigid support connected to the basic body in a fixed manner, extending in the longitudinal direction thereof. As a result the distal end of the catheter will become very stable which is necessary to carry out the treatment.

The invention will be explained in greater detail in the following description with reference to the attached drawings.

Figure 1 shows a partly broken away perspective view of the distal end of a catheter according to an embodiment of the invention.

Figure 1 shows a partly broken away perspective view of the distal end of a catheter according to an embodiment of the invention.

Figure 2 shows the distal end with the electrode array illustrated in Figure 1 when being folded.

Figure 3 shows a partly broken away longitudinal cross-section of the catheter with the electrode array in the retracted state.

Figure 4 shows a partly broken away view of a catheter according to another embodiment of the invention.

Figure 5 shows a cross-section along the line V-V of Figure 4.

Figure 6 shows yet another embodiment.

Figure 7 shows a cross-section along the line VII-VII of Figure 6.

Figure 8 illustrates the way in which the carrier is wound up.

Figure 9 shows an embodiment of the invention whereby the carrier comprises an inflatable balloon.

Figure 10 shows the embodiment of Figure 9 whereby the balloon has been retracted inside the basic body.

Figure 11 illustrates a cross-section through a carrier comprising a balloon.

Of the catheter shown in the figures, only the distal end with the electrode array has been illustrated. The catheter 1 comprises in the usual manner a tube-like basic body 2 which extends from a proximal end, which remains outside the body of the patient when in use, to the distal end shown in figure 1.

With the embodiment shown, the basic body 2 comprises an outer tube-like element 3 with a central lumen inside of which an inner tube-like element 4 has been received, which is movable in a longitudinal direction.

The inner tube-like element 4 is, as can be seen in figure 3, made up of a core 12 which has been formed by a helically coiled steel wire with a rectangular cross-section and is surrounded by a closely fitting outer sheath 11. By employing this construction, the thickness of the wall of the inner tube-like element 4 can be kept to a minimum, so that the overall thickness of the catheter can remain limited.

A bar-like support 15 has been fixed inside the end of the inner tube-like element, for instance by means of cement 16. As can be seen in figure 1, a plate-like carrier has been arranged on this support 15. On the carrier 18 a bag 19 has been mounted, which can be filled with a fluid via a channel 20 inside the support 15. Finally, the electrode array 5 has been arranged on top of the bag 19.

With this example of an embodiment the electrode array 5 is rectangular in shape and is made up of a great number of electrodes 6. The electrodes 6 have been made in the form of printed wiring on a foil substrate 7. As a result the electrode array 5 is pliable.

At the bottom of the foil substrate 7 not illustrated in figure 1, conductors have been arranged

in the form of printed wiring which are connected, each time, with electrodes 6 via metallized openings in the foil 7. From each electrode 6 one conductor runs along the back of the foil substrate 7 to a multiplexer 9, which has been mounted on a narrower end-section of this foil. The electrode array has been fixed with this narrower section in the end of the inner tube-like element 4.

In figure 1, one of the lines which runs from an electrode 6 to the multiplexer 9 has been illustrated schematically and is indicated with the reference number 8.

From the multiplexer 9, signal lines 10 extend to the proximal end of the catheter 1.

In the state illustrated in figure 1, the catheter 1 can be used to map electrical activity in the inner wall of the heart of a patient. Especially in the case of tachyarrhythmias this is desirable in order to map pathways of undesired electrical activity. To this end the electrodes 6 of the electrode array 5 are manoeuvred against the wall of the heart. Because of the springy, compressible support of the bag 9 filled with fluid, the electrodes 6 can make proper contact with the surface of the wall.

After taking measurements and establishing undesired pathways, an ablation treatment can be carried out in order to disturb the undesired pathways. Via the signal lines 10 the electrodes 6, which are to ablate the wall of the heart against which they are positioned, are activated by means of the multiplexer 9. In this way the undesired pathways can be interrupted very selectively and at exactly the right place.

After the treatment, the electrode array 5 has to be folded again from the unfolded state illustrated in figure 1, in order to be able to remove it from the body of the patient.

For this purpose the carrier 18 of the electrode array 6 has been made of memory metal. The

unfolded state of the carrier 18 illustrated in figure 1, that is to say the state in which it forms a more or less flat sheet, is the relatively relaxed state of the memory metal at raised temperature. The folded state, to be described in greater detail below, is the relatively relaxed state at body temperature. In order to bring the carrier 18 from the folded into the unfolded state, heating means have been arranged on the carrier 18, which can be turned on via lines 21, 22 which extend to the proximal end. When turned on, the carrier 18 is heated to above transition temperature, as a result of which the relatively relaxed unfolded state illustrated, is effected. The transition temperature can for instance be something like 45°C.

In order to fold the electrode array 5, the heating means are turned off. With the embodiment shown here, the heating means have been arranged in two separate sections, that is to say separated in the longitudinal direction of the catheter. Figure 2 illustrates the state when the back section of the heating means, as seen in the figures, is turned off. As a result the back section of the carrier 18 will cool down to body temperature and adopt the corresponding stable position, which corresponds to a from rolled up around the longitudinal axis.

In order to move the carrier into the folded state, the fluid has been removed from the bag 19, so as to obtain a minimal thickness of the assembly.

After the first section of the carrier has turned into the folded state of rest, the second section of the heating means is turned off, as a result of which also the front section of the carrier 18, as seen in figures 1 and 2, will roll up in the direction of the arrow 24 and resume the folded state. Next the electrode array 5 can be pushed into the outer tube-like body 2 by pulling the inner tube-like body 4, in relation to the outer tube-like body 2, outwards at the proximal end. Thus the state as illustrated schematically in figure 3

is brought about. The electrode array 5 has been moved inwards over a distance 25 in the direction indicated by the arrow 23 of figure 2, so that it is enclosed completely by the outer tube-like body 3.

It will be clear that also on introduction of the catheter into the patient, the electrode array 5 is kept in the folded and retracted state, until the distal end of the catheter has reached the target position, in particular the heart of the patient. Then the electrode array will be extended and the heating means activated as a result of which the electrode array will unfold into the state illustrated in figure 1 and will be ready for use.

With a somewhat altered embodiment of the catheter illustrated in figure 1, the support 15 can be made in such a manner that it can be retracted separately in relation to the inner tube-like element 4. The support 15 will in that case be fixed to the carrier 18 only close to the latter's most distal section. By moving, when in use, the support 15 in relation to the inner tube-like element 4 in the direction of the proximal end, the carrier 18, and consequently the electrode array 5, will be deformed into a convex shape, which provides an extra possibility to achieve proper contact of the electrode array 5 with for instance the wall of the heart.

With the catheter 30 as shown in figure 4 the carrier comprises a pliable sheet such as a foil 33. The electrode array 34 has been arranged on this foil, for instance by means of a deposition technique.

Along two opposite sides, the sheet 33 is connected to wire like elements 35, 36. These wire like elements have been received in an inner tube-like element 32 of the basic body 31 and extend, via this tube-like element 32, to the proximal end of the catheter. In addition to these two wire like elements 35, 36 along the edges of the sheet 33, a central wire like element 37 has

been arranged as well, which supports the sheet 33 in the centre.

As can be seen in figure 5, the curve of the sheet 33 can be altered by rotating the wire like elements 35, 36 around their longitudinal axis. For this purpose these wire like elements 35, 36 have been provided with operating means at their ends protruding from the proximal end of the basic body 31. These have not been illustrated here.

The inner tube-like element 32 has been received in the basic body 31 in a movable manner, and by pulling at its proximal end the assembly of wire like elements 35, 36 bending outwards and the foil connected thereto, can be pulled into the basic body 31. The wire like elements 35, 36 are resilient so that they bend outwards automatically when extended and stretch the foil 33 by doing so.

The catheter illustrated in figures 4 and 5 can also be further developed in a suitable manner so that the sheet 33 and the electrode array 34 arranged to it can curve around an axis at right angles to the longitudinal direction of the catheter. To achieve this, the central wire like element 37 will be made so that it can be moved separately in a way analogous to the one described when referring to figure 1. By pulling at this element 37 at the proximal end of the catheter, the sheet 33 will curve, so that the sheet 33 can curve in two directions around two axes at right angles to one another. Suitable manipulation of the elements 35, 36, 37 can consequently ensure proper contact between the electrode array 34 and for instance the wall of a heart.

As shown in figure 6, the catheter 40 also comprises a carrier in the form of a foil 43 on top of which the electrode array 44 has been arranged. The carrier 43 is connected with opposite sides to wire like elements 41, 42 which are elastic and push the opposite sides of the sheet apart in a resilient manner, so that,

in the unfolded state shown in figure 6, the carrier 43 is kept stretched.

The sheet 43 is also connected to a central pin 45 at a point in between the sides connected with the wire like elements 41, 42, which serves to support the sheet 43 and to fold the carrier in order to be able to retract it into the basic body 46.

As can be seen in figure 7, also in the case of this embodiment a suitable curve can be given to the sheet 43 carrying the electrode array 44, by rotating the wire like elements 41, 42.

The operative end of the catheter 40 has been received inside the basic body 46 when inserting the catheter. As soon as the distal end of the catheter 40 has arrived at the position where the treatment is to be carried out, this operative end-section is extended by moving the inner tube-like element 47 in a longitudinal direction in relation to the outer tube-like element 46.

Following treatment the operative end has to be received once again inside the tube-like basic body 46. To this end the central pin 45 is turned in the direction shown in figure 8, as a result of which the sheet 43 is wound around this pin and the wire like elements 41, 42 are pulled towards this pin 45. Thus the assembly is gathered to form a small diameter and can be received in the basic body 46 by pulling the inner tube-like element 47 inwards.

With the embodiment 50 of the figures 9 and 10 the carrier comprises an inflatable balloon 51. The latter may be preformed in a suitable manner to ensure that the electrode array 56 arranged on the wall thereof unfolds into a suitable shape as soon as the balloon is inflated.

In this case, the electrode array 56 is connected to a multiplexer 57 via lines 55 arranged on the outside of the balloon, so that only one single line 58 has to be led to the proximal end of the catheter.

Instead of using one single multiplexer, it is also possible to employ more than one multiplexer by way of control. The same obviously goes for the embodiment of figure 1.

A central pin 52, to the relatively proximal end of which the relatively proximal end of the balloon 51 has been arranged, extends through the basic body 59 of the catheter. After deflating the balloon 51, it can be pulled back inside the basic body 59, by moving the pin 52 in a longitudinal direction towards the proximal end. The state in which the balloon 51 has been received inside the basic body 59 has been illustrated in figure 10.

Finally, figure 11 shows a possible cross-section of a catheter according to the invention whereby the carrier comprises a balloon 60. The balloon has been preformed in such a manner that it can have the elongated shape of the cross-section shown in the figure. At a top surface , illustrated in figure 11, an electrode array 65 has been arranged. A partition 61 extends transversely through the balloon 60 as a result of which two compartments 62, 63 are formed. The compartments 62, 63 can be filled in different manners. The compartment 63 can for instance be inflated harder, forming a firm base, whereas the compartment 62 can be inflated relatively lightly as a result of which the support of the electrode array 65 is resilient and this electrode array 65 can adjust properly to the surface 66 to be treated. With this embodiment a central pin 64 has been drawn as well and serves for pulling the balloon into the basic body.

The embodiments of the invention in which an exclusive property or privilege is claimed are defined as follows:

1. An intraventricular multielectrode cardiac mapping probe comprising:

a catheter having an open proximal end, an open distal end, and a lumen confluent with said open proximal end and said open distal end;

an elongate inner tubing slidably received and movable within said lumen of said catheter, said tubing having a distal end, a proximal end and a lumen extending through the length thereof; a plurality of elongate insulated conductor assemblies mounted within said lumen of said elongate inner tubing; and,

an electrode array assembly including a flexible electrode carrier mounted on and carried by the distal end of the inner tubing and having a plurality of spaced-apart electrodes mounted on a face of said electrode carrier, each of said electrodes being in electrical continuity with one of said conductor assemblies, said electrode carrier being in a folded configuration and being positioned within the lumen of the catheter, the electrode carrier exhibits the characteristic that upon being released it returns to its original preformed generally planar configuration so that when the distal end of the catheter is placed in a desired position within the heart chamber the inner tubing may be slidably moved toward the distal end of the catheter to thereby cause the electrode array assembly to move out of the distal end of the catheter thereby causing the electrode array to expand from its retracted folded position within the lumen of the catheter to its preformed generally planar configuration outside of the catheter to thereby permit the measurement of electrical potentials at different points along the surface of the endocardial wall of the heart chamber;

wherein the electrode array assembly is comprised of a planar sheet of shape memory material in which the folded state occurs at less than about 45° centigrade and the unfolded generally planar state occurs at a temperature above about 45° centigrade.

2. A mapping probe as defined in claim 1, wherein the mapping probe includes heating means for heating the electrode array assembly to thereby

cause the array to change from a folded state to an unfolded generally planar shape.

3. A mapping probe as defined in claim 2, wherein the shape memory material is comprised of nitinol.

4. An intraventricular multielectrode cardiac mapping probe comprising: a catheter having an open proximal end, an open distal end, and a lumen confluent with said open proximal end and said open distal end;

an elongate inner tubing slidably received and movable within said lumen of said catheter said tubing having a distal end, a proximal end and a lumen extending through the length thereof; a plurality of elongate insulated conductor assemblies mounted within said lumen of said elongate inner tubing; and

an electrode array assembly including a flexible electrode carrier mounted on and carried by the distal end of the inner tubing and having a plurality of spaced-apart electrodes mounted on a face of said electrode carrier, each of said electrodes being in electrical continuity with one of said conductor assemblies, said electrode carrier being in a folded configuration and being positioned within the lumen of the catheter, the electrode carrier exhibits the characteristic that upon being released it returns to its original preformed generally planar configuration so that when the distal end of the catheter is placed in a desired position within the heart chamber the inner tubing may be slidably moved toward the distal end of the catheter to thereby cause the electrode array assembly to move out of the distal end of the catheter thereby causing the electrode array to expand from its retracted folded position within the lumen of the catheter to its preformed generally planar configuration outside of the catheter to thereby permit the measurement of electrical potentials at different points along the surface of the endocardial wall of the heart chamber;

wherein the electrode array assembly is rolled up along a longitudinal axis of the catheter in the folded configuration.

5. An intraventricular multielectrode cardiac mapping probe comprising: a catheter having an open proximal end, an open distal end, and a lumen confluent with said open proximal end and said open distal end;

an elongate inner tubing slidably received and movable within said lumen of said catheter, said tubing having a distal end, a proximal end and a lumen extending through the length thereof; a plurality of elongate insulated conductor assemblies mounted within said lumen of said elongate inner tubing; and

an electrode array assembly including a flexible electrode carrier mounted on and carried by the distal end of the inner tubing and having a plurality of spaced-apart electrodes mounted on a face of said electrode carrier, each of said electrodes being in electrical continuity with one of said conductor assemblies, said electrode carrier being in a folded configuration and being positioned within the lumen of the catheter, the electrode carrier exhibits the characteristic that upon being released it returns to its original preformed generally planar configuration so that when the distal end of the catheter is placed in a desired position within the heart chamber the inner tubing may be slidably moved toward the distal end of the catheter to thereby cause the electrode array assembly to move out of the distal end of the catheter thereby causing the electrode array to expand from its retracted folded position within the lumen of the catheter to its preformed generally planar configuration outside of the catheter to thereby permit the measurement of electrical potentials at different points along the surface of the endocardial wall of the heart chamber;

wherein the electrode array assembly includes a resilient, compressible cushion interposed between the electrode carrier and the electrodes to thereby urge the electrodes against the interior wall of the heart when the electrode array assembly is in a performed generally planar configuration.

6. A mapping probe as defined in claim 5, wherein the resilient cushion takes the form of a flexible bag filled with a fluid.

7. An intraventricular multielectrode cardiac mapping probe comprising: a catheter having an open proximal end, an open distal end, and a lumen confluent with said open proximal end and said open distal end;

an elongate inner tubing slidably received and movable within said lumen of said catheter, said tubing having a distal end, a proximal end and a lumen extending through the length thereof; a plurality of elongate insulated conductor assemblies mounted within said lumen of said elongate inner tubing; and

an electrode array assembly including a flexible electrode carrier mounted on and carried by the distal end of the inner tubing and having a plurality of spaced-apart electrodes mounted on a face of said electrode carrier, each of said electrodes being in electrical continuity with one of said conductor assemblies, said electrode carrier being in a folded configuration and being positioned within the lumen of the catheter the electrode carrier exhibits the characteristic that upon being released it returns to its original preformed generally planar configuration so that when the distal end of the catheter is placed in a desired position within the heart chamber the inner tubing may be slidably moved toward the distal end of the catheter to thereby cause the electrode array assembly to move out of the distal end of the catheter thereby causing the electrode array to expand from its retracted folded position within the lumen of the catheter to its preformed generally planar configuration outside of the catheter to thereby permit the measurement of electrical potentials at different points along the surface of the endocardial wall of the heart chamber;

wherein the electrode array assembly includes at least two wires with a sheet of foil extending between said wires and the spaced-apart electrodes being mounted on the sheet of foil.

8. A mapping probe as defined in claim 7, wherein the electrode array assembly also includes rotatable pins which are positioned along a central axis and equally spaced between the wires and being attached to the central section of the sheet of foil so that upon rotation of the pin the foil is caused to

roll up on the pin thereby causing the wires to be retracted from preformed expanded positions to positions proximate the rotating pin.

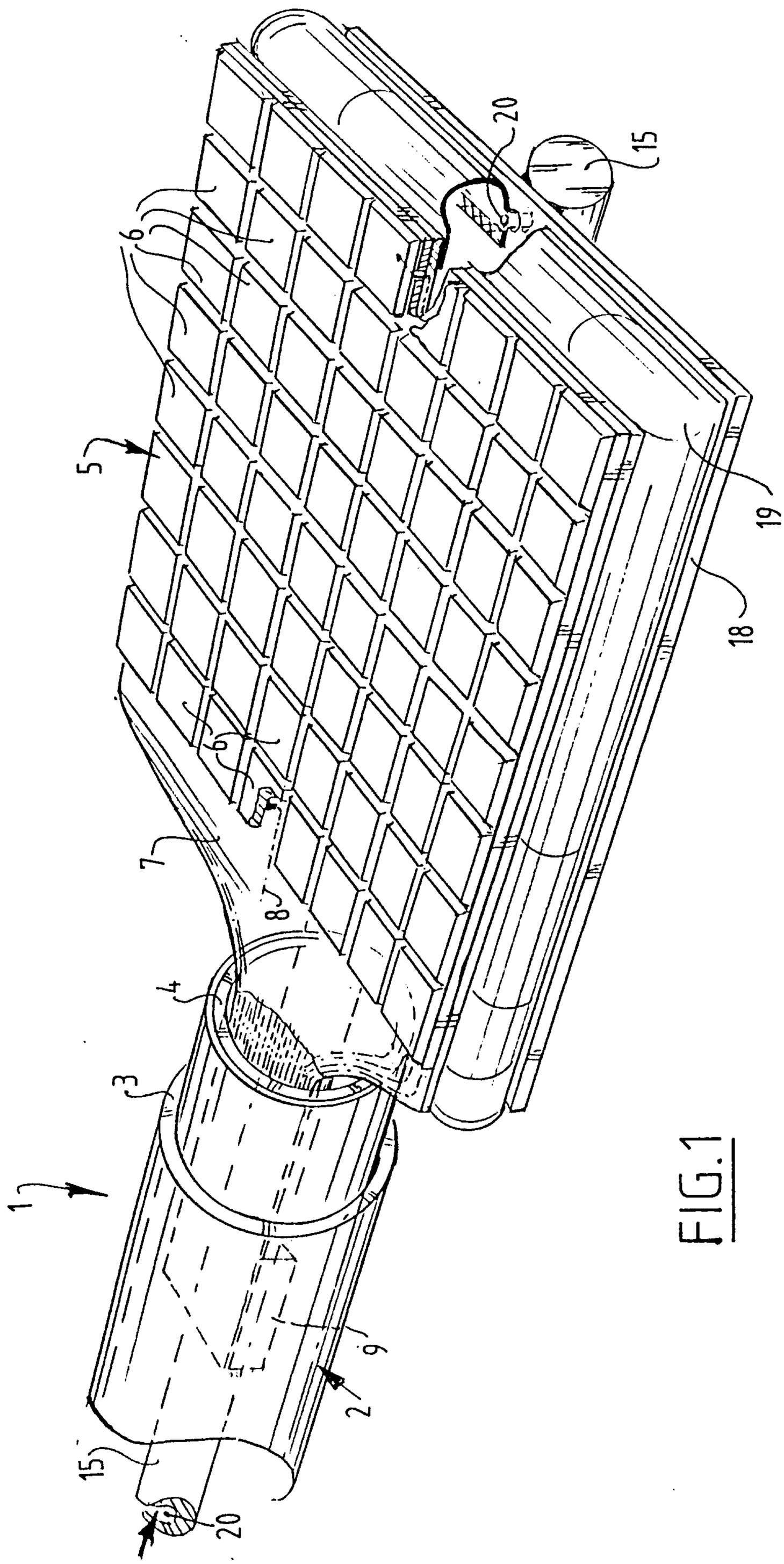

FIG.1

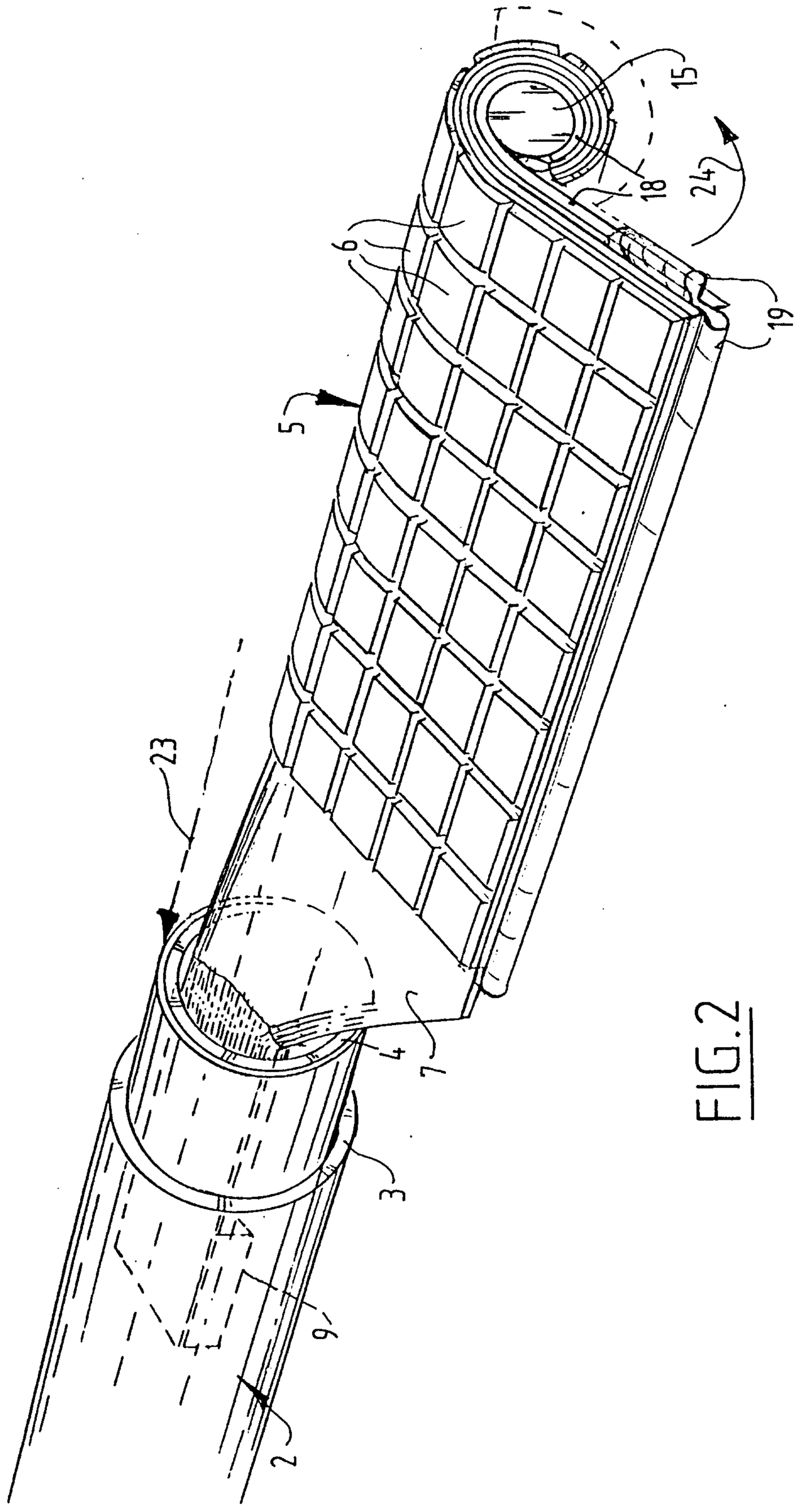

FIG.2

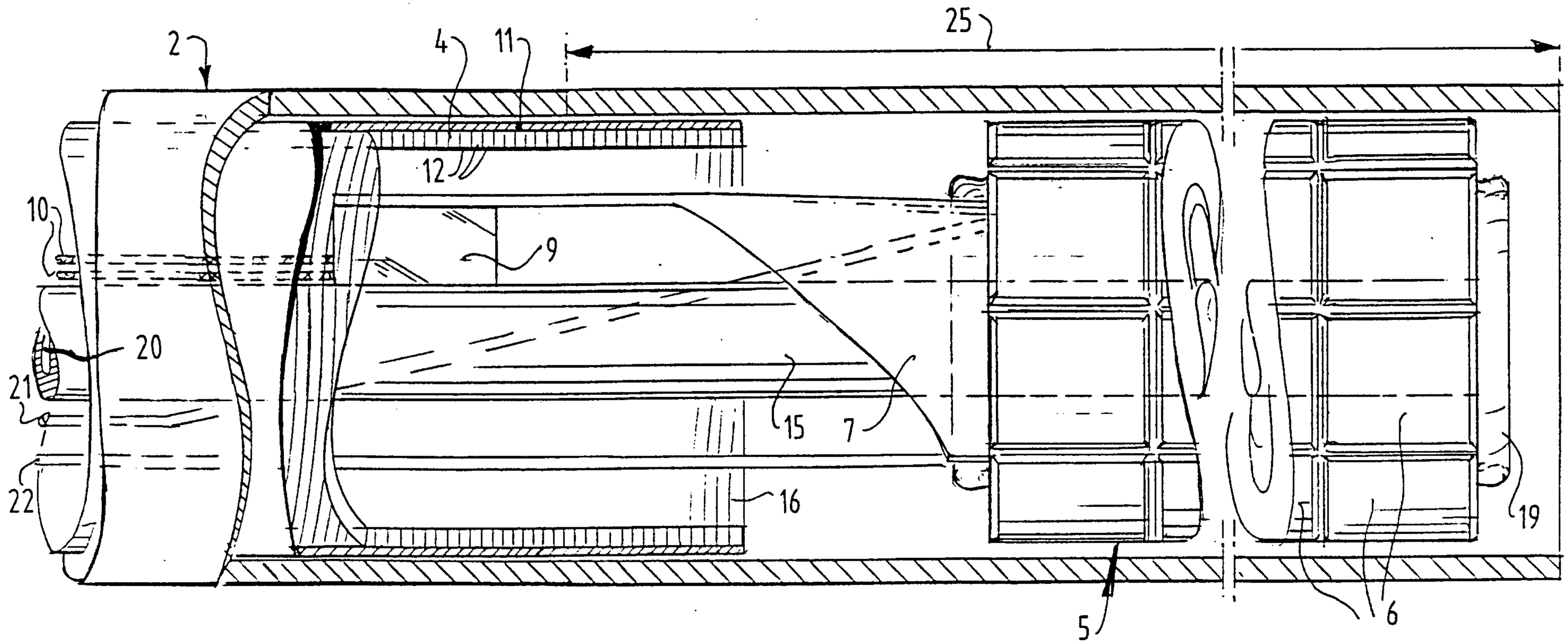

FIG.3

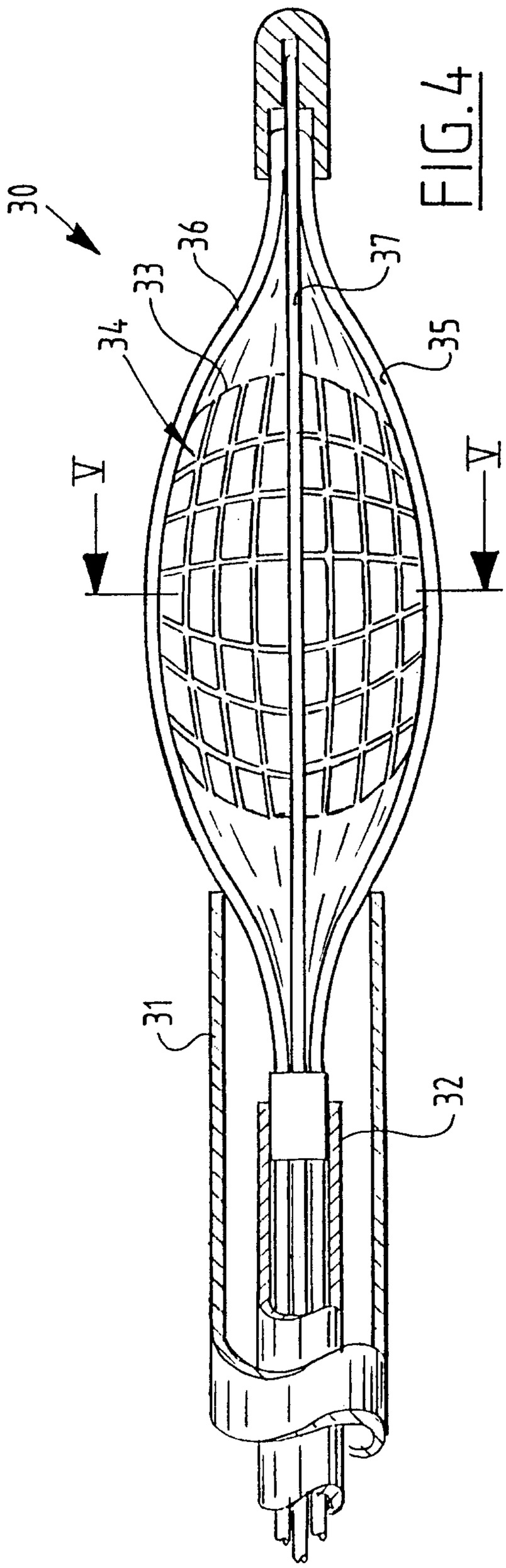

FIG.4

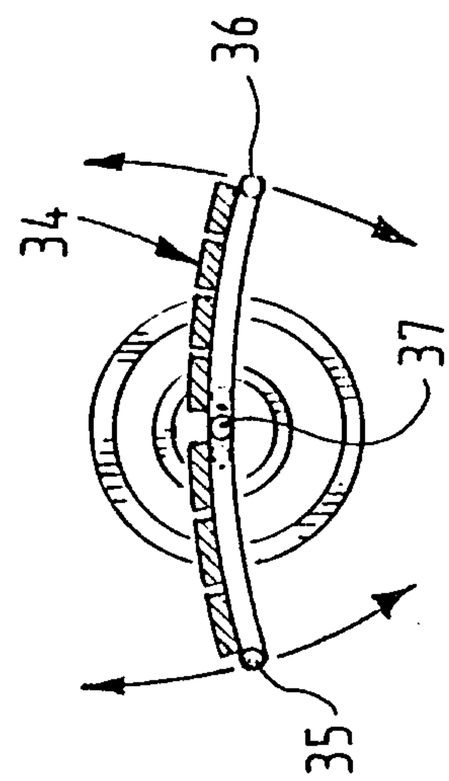

FIG.5

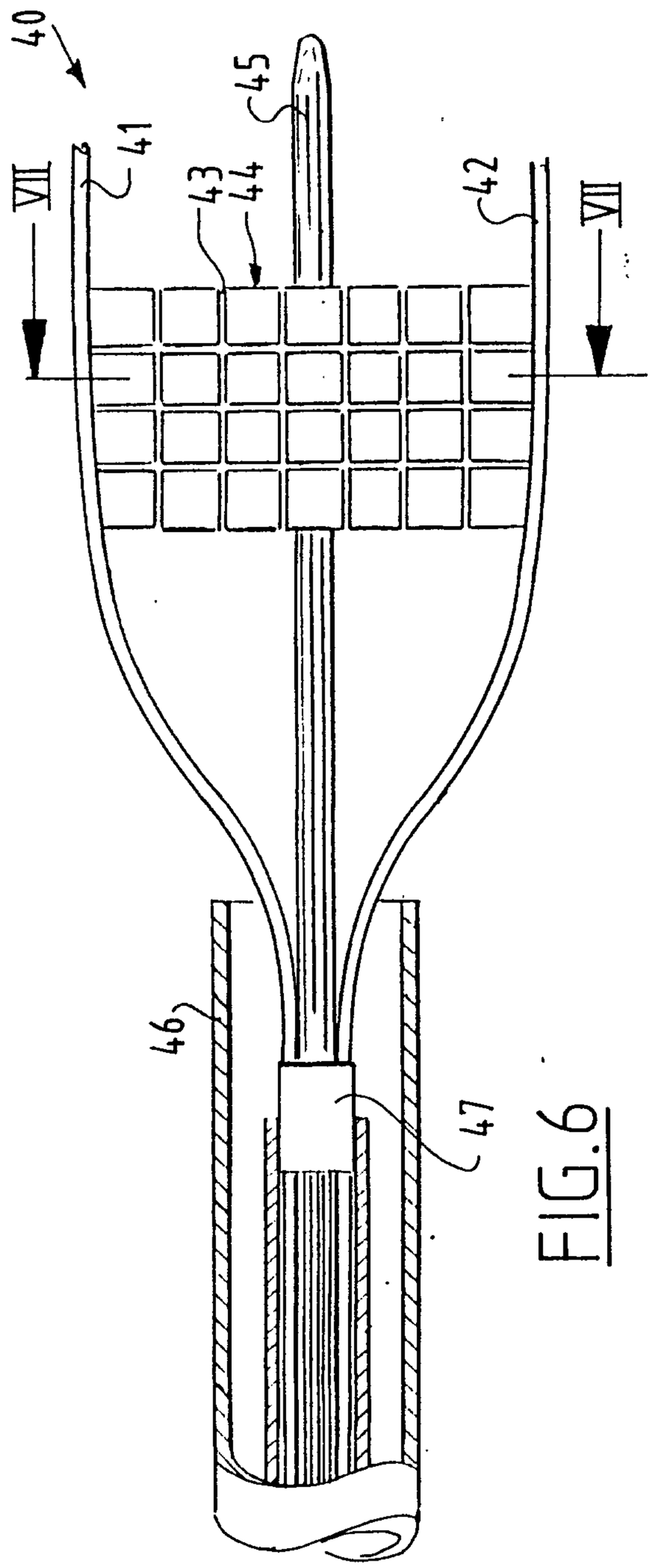

FIG.6

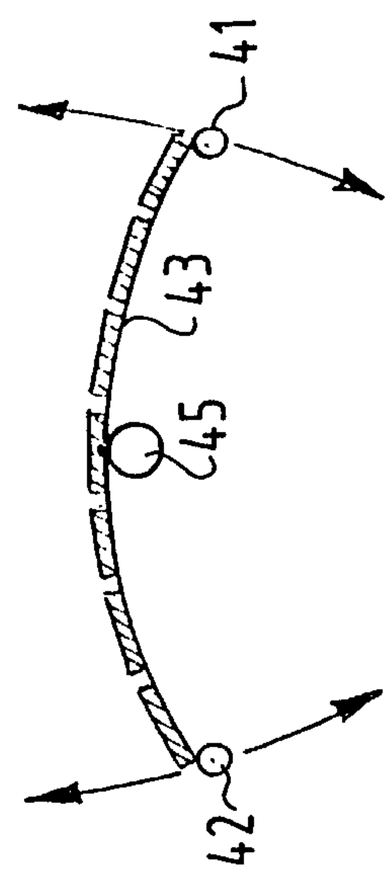

FIG.7

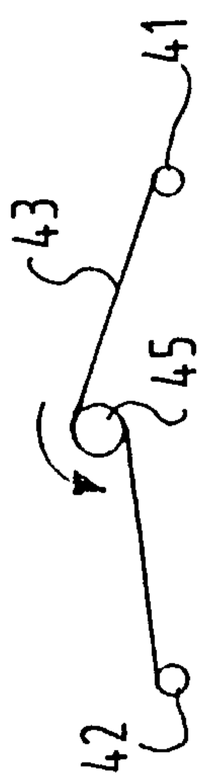

FIG.8

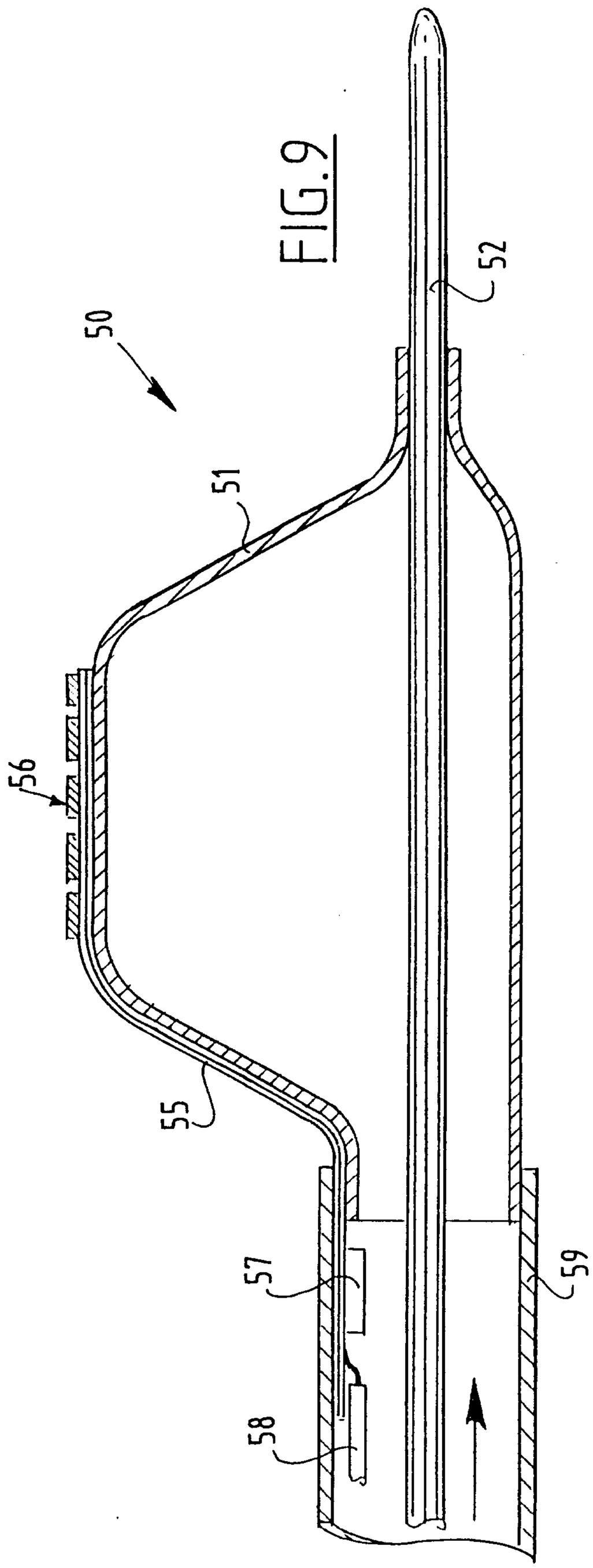

FIG.9

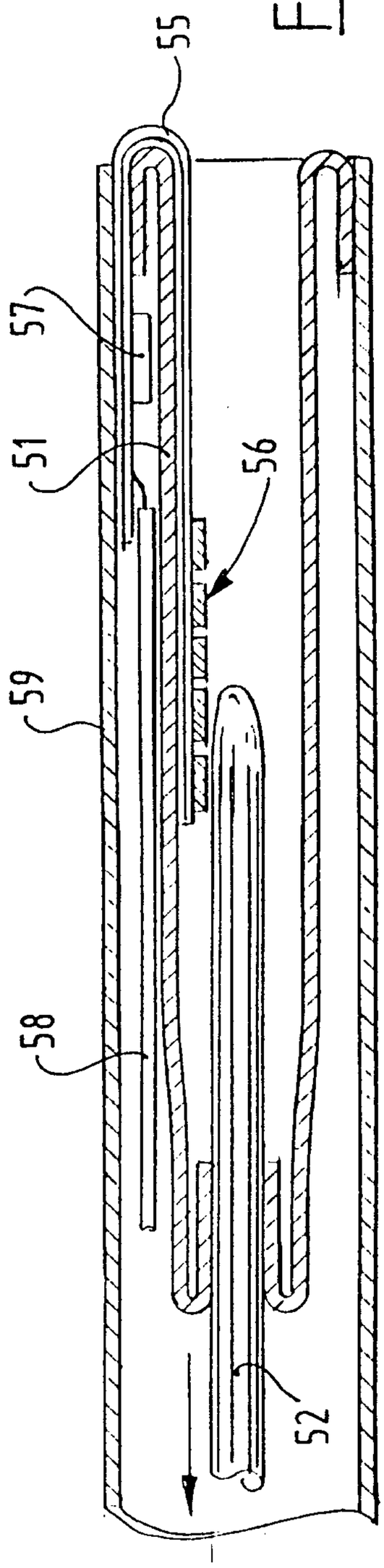

FIG.10

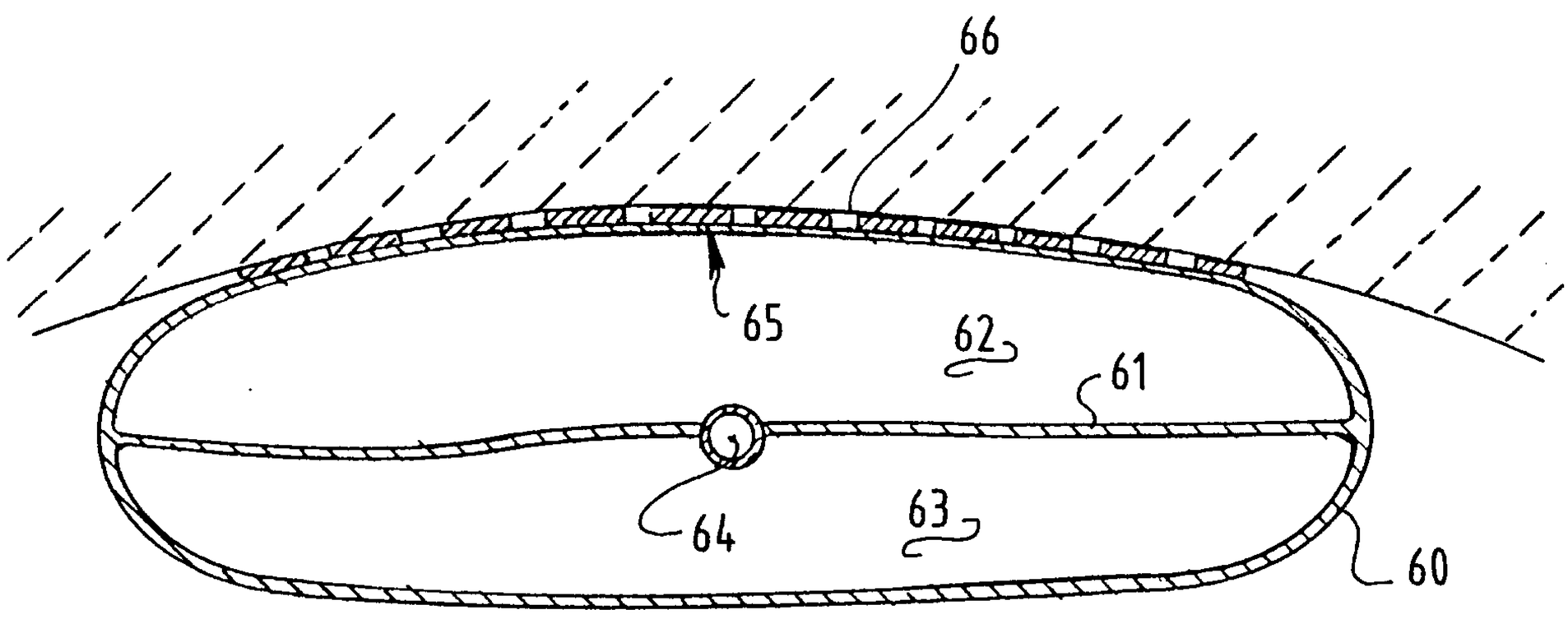

FIG.11

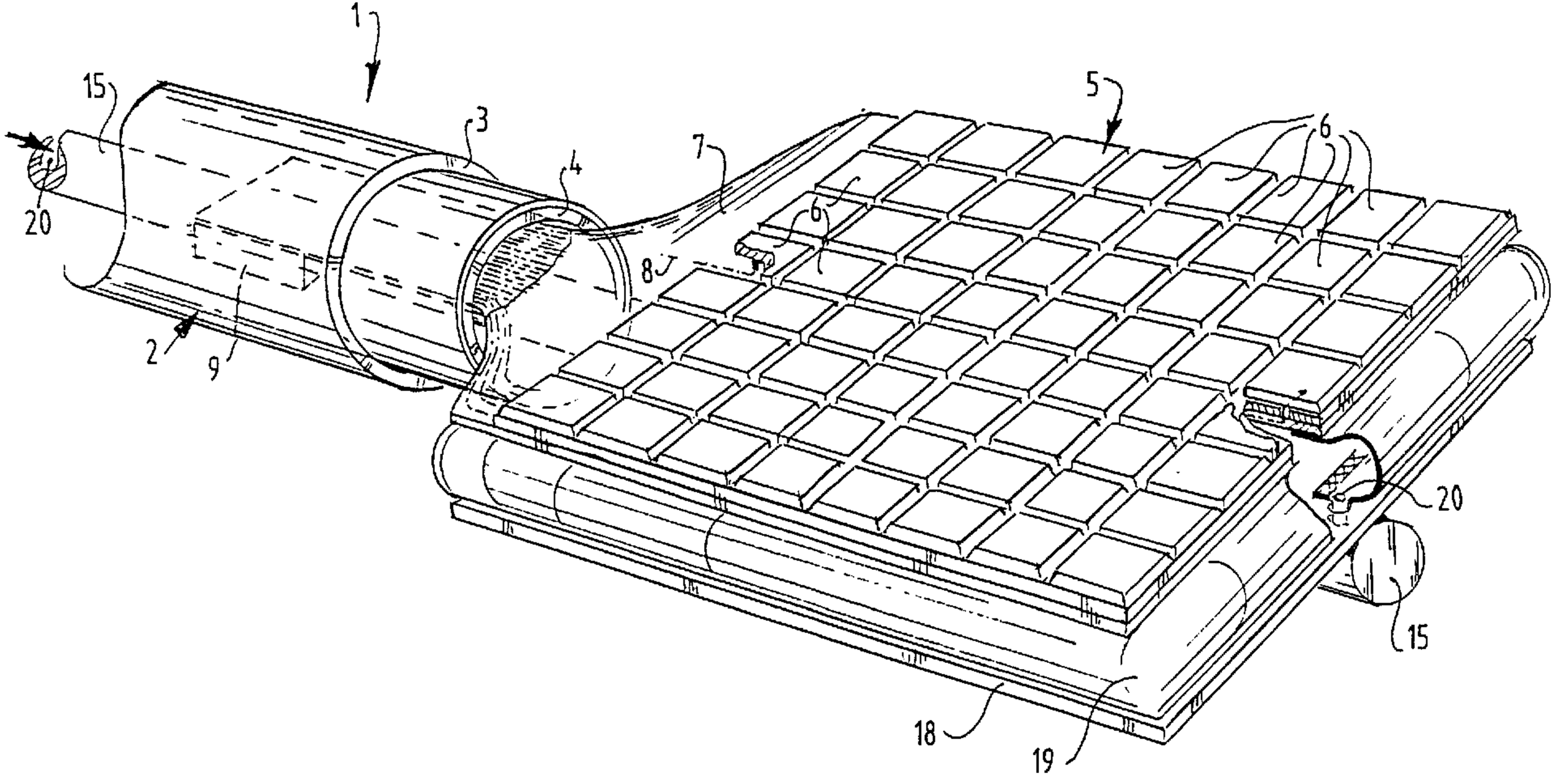
1
15
3
4
7
5
6
6
8
20
2
9
20
15
18
19