COMBUSTION-ENGINE EXHAUST SYSTEMS

Filed Sept. 19, 1960 2 Sheets-Sheet 1

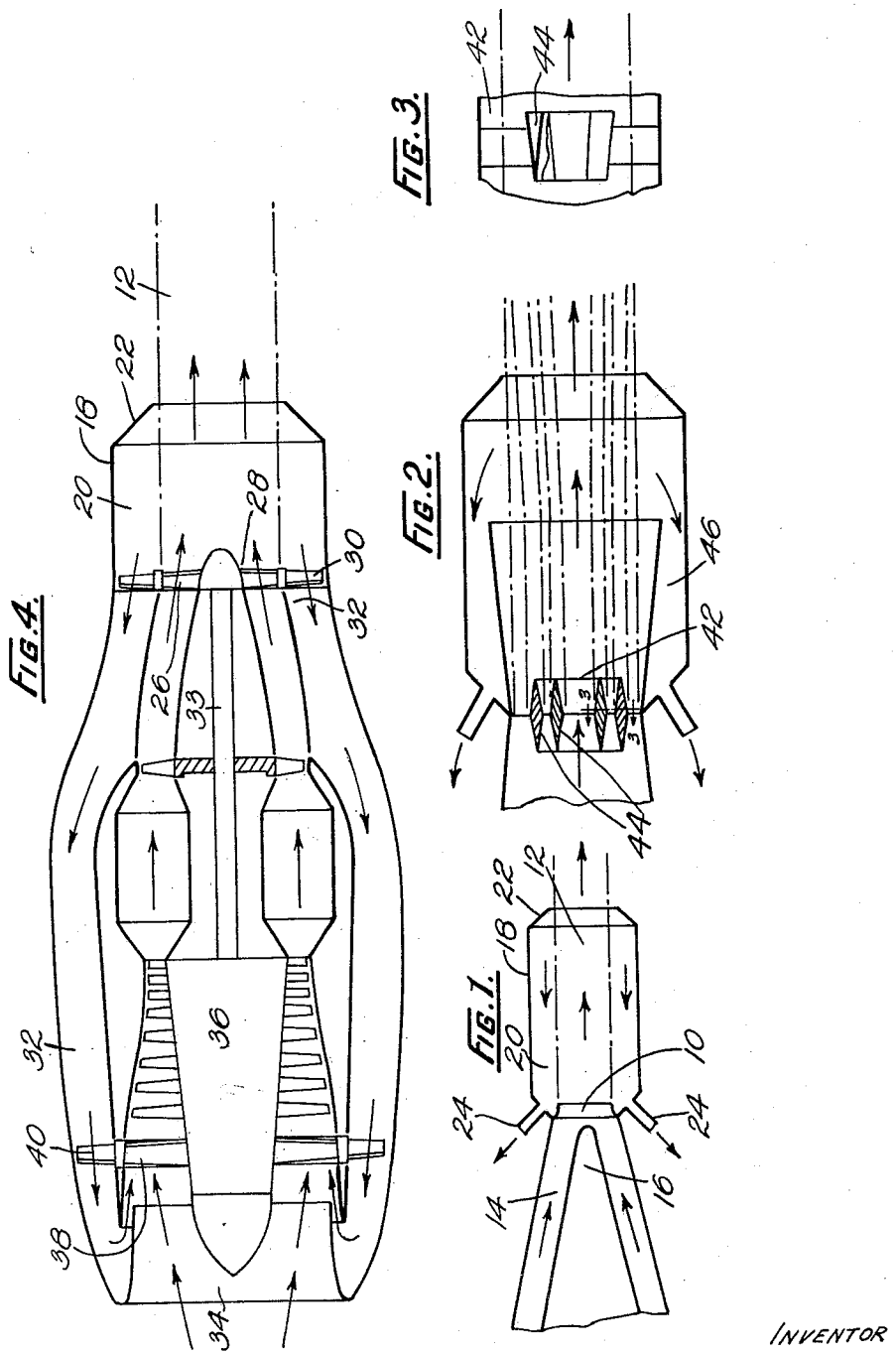

INVENTOR
ROY W. RUMBLE
BY Irwin S. Thompson
ATTY.

COMBUSTION-ENGINE EXHAUST SYSTEMS

Filed Sept. 19, 1960 2 Sheets-Sheet 2

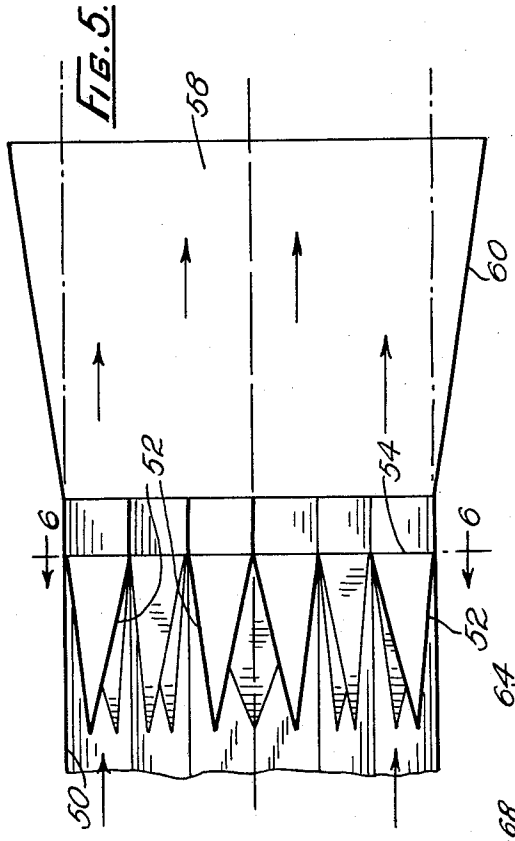

FIG. 5.

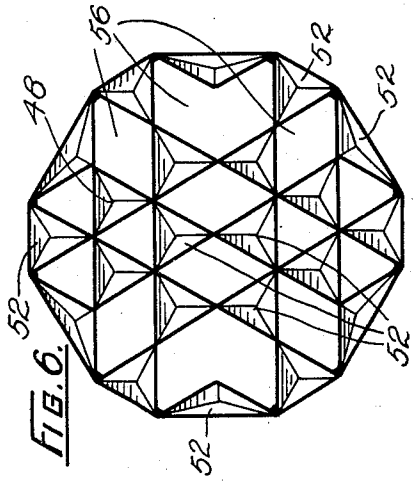

FIG. 6.

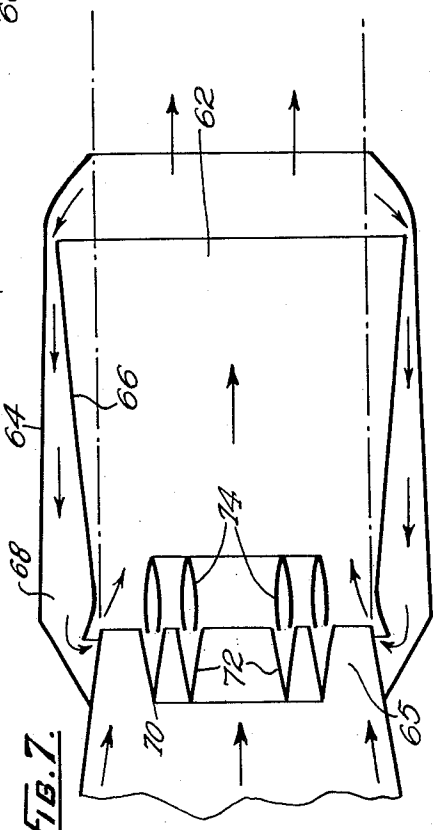

FIG. 7.

INVENTOR

ROY W. RUMBLE

BY Irwin S. Thompson

ATTY.

United States Patent Office

3,095,696

Patented July 2, 1963

1

3,095,696

COMBUSTION-ENGINE EXHAUST SYSTEMS

Roy W. Rumble, Johannesburg, Transvaal, Republic of South Africa (P.O. Box 357, Germiston, Transvaal, Republic of South Africa)

Filed Sept. 19, 1960, Ser. No. 57,003
Claims priority, application Republic of South Africa Sept. 25, 1959
14 Claims. (Cl. 60—35.6)

This invention relates to noise-abatement systems for combustion engines.

The silencing of engines and especially engine exhausts has occupied the attention of designers from the infancy of the combustion engine. As far as concerns road vehicles, the problems have been satisfactorily solved, but with the birth of the jet engine, with exhaust gases moving at very high speeds, silencing is very much to the fore again. The problem appears to be at its most acute when the exhaust stream is supersonic because it is probable that a large proportion of the noise produced is due to the stream decelerating through the sound barrier.

The object of this invention is to propose a method of reducing the noise made by combustion engines and especially by the streams of exhausting gases.

Sound can only be freely propagated in a gaseous medium, and the basis upon which the invention proceeds is to form and maintain, around the engine and in particular in the zone of the emergent stream, a condition of reduced pressure which attenuates the sound produced by the stream.

The zone of reduced pressure may be produced by the stream itself, for instance by shaping the conduit through which the stream emerges to induce into the stream flow of air from the annular zone surrounding it. Preferably, however, the zone is created by mechanical means such as a fan driven by the prime mover or by the emergent stream, or both.

It is also a feature of the present invention that the exhaust stream be broken up into separate parallel streams in a closed pattern with zones of reduced pressure occluded in the streams. Of course the whole stream is still provided with a zone of reduced pressure around its periphery.

Various embodiments of the invention are shown in the accompanying drawings in which:

FIGURE 1 is a longitudinal section through the tail end of a jet engine;

FIGURE 2 is a longitudinal section of a second arrangement;

FIGURE 3 is a cross-section on the line 3—3 of FIGURE 2;

FIGURE 4 is a longitudinal section through a jet engine;

FIGURE 5 is a side view of one form of nozzle and diffuser pipe;

FIGURE 6 is a section on the line 6—6 of FIGURE 5; and

FIGURE 7 is a side view in section of another embodiment.

In FIGURE 1 there is seen the nozzle **10** of a jet-propulsion engine with the jet stream **12** emerging from the annular duct **14** defined between the nozzle and the hub fairing **16**.

In the immediate vicinity of the nozzle **10**, the jet stream, as it leaves the nozzle, is indicated by chain-dotted lines. In that vicinity the stream behaves virtually like a solid body, that is to say there is no significant diffusion or dissociation at its periphery into the ambient atmosphere.

In the zone at and immediately behind the nozzle **10**, the nozzle and the emergent stream are surrounded by a

2

jacket **18** that defines between itself and the stream a space **20** that is annular or of other cross-section depending upon the shape of the nozzle. The jacket has an inward flange **22** that terminates just outside the periphery of the stream **12**, so that the space **20** is substantially enclosed.

The jacket is connected to a source of suction by pipes **24**.

In use, the space **20** is maintained at a pressure reduced below atmospheric pressure by continuously applying suction to it. The sound of the emergent stream is attenuated as it traverses the space **20**. The noise of the engine is thereby sensibly diminished.

A means of applying suction to the space **20** is shown in FIGURE 4. In this figure a fan **26** is located at the nozzle **28** to be impinged on by the gas stream and rotated. The fan blades **30** are extended beyond the nozzle into the space **32** (which, in this case, surrounds the length of the engine), but the blades in the space are of reversed pitch so that they apply suction to the space **32** that surrounds the emergent stream.

Alternatively the fan **26** may be driven by the turbine through a shaft **33**.

At the forward end of the engine the space **32** communicates with the intake **34** to the turbine **36**. Air ingoing to the turbine tends to induce the flow of gas along the space **32** and into the air-stream, so that the entire space **32** is at reduced pressure. Noise evolved by the engine as well as the jet stream is thereby attenuated.

To aid evacuation of the space **20**, one stage **38** of the turbine can be extended into the space **32**, as shown at **40**, where the pitch of the blade tips is reversed.

In FIGURES 2 and 3, an arrangement as shown in FIGURE 1, or it may be in FIGURE 4, is used, but within the nozzle **42** there is arranged a pattern of vanes **44** spaced apart to split the jet stream into a number of separate channels. Between the channels the pressure is reduced. Each channel is thus surrounded by a zone of reduced pressure, and the whole stream is surrounded by a zone of reduced pressure within the space **46**.

In FIGURES 5 and 6 there is seen a baffle structure defining a pattern of vanes **48** of another kind. Here the area of the nozzle **50** contains an arrangement consisting in a series of pyramidal pockets **52** open at their mouths **54** which are directed rearwardly. These pockets occur right round the periphery of the nozzle and also within the nozzle itself. The various pockets **52** define between them a series of spaces **56** through which the jet stream **58** emerges.

Beyond the nozzle is a tapered diffuser tube **60**. The nozzle and tube may be surrounded by a jacket, as shown in FIGURES 1 to 4, or not.

The nozzle is, of course, dimensioned for the aggregate area of the open spaces **56** to be adequate to pass the jet stream.

The effect of the pockets **53** is that the stream flowing through the spaces **56** (which act as venturis) into the diffuser tube **58** tends to induce flow of air from the pockets **52** into the stream. As these pockets are closed, they are maintained at a reduced pressure which acts to attenuate the noise produced by the jet stream.

In FIGURE 7, it is the jet stream **62** itself that acts to reduce the pressure within the jacket **64**. The stream passing through the venturi constituted by the convergent nozzle **65** and the divergent diffuser tube **66** induces flow of air from the space **68** defined between the jacket **64** and the tube **66**, which causes and maintains a condition of reduced pressure within the space.

The throat of the nozzle **65** may contain a pattern of vanes **70** comprising pyramidal pockets **72** and rearwardly directed aerofoils **74** within the mouths of the pockets. The stream **62** tends to induce flow of air from the pockets

and aerofoils, which are maintained under reduced pressure.

In the several embodiments, some reverse flow of the exhaust gases may take place into the enclosed space around the exhaust stream, but the momentum of the stream prevents any reverse flow of significant proportion, and what reverse flow there is does not materially affect the condition of reduced pressure within the space.

In all figures the nozzle may be circular in section and the jacket likewise; but preferably the jacket and desirably also the nozzle are polygonal, so that sound waves tend to be reflected from the wall of the jacket, or both of them, back into the stream.

I claim:

1. A jet propulsion engine including a conduit for the jet stream and comprising a convergent nozzle having an inlet mouth disposed at the discharge end of said conduit, a jacket coaxially disposed at and surrounding said nozzle and having a portion extending downstream of said nozzle, said portion having inwardly directed flanges which define an aperture having substantially the same diameter as said convergent nozzle exit mouth, and means being provided in said jacket to reduce the pressure in the space forbed between said convergent nozzle and said jacket to reduce the noise level.

2. An engine according to claim 1 in which said jacket surrounds the conduit along its length defining therewith an annular space of reduced pressure therealong.

3. An engine according to claim 2 in which said means consists of a rotor having turbine blades of a predetermined pitch mounted in the exit mouth of said convergent nozzle and being rotated by the fluid flow, said blades having extensions forming fan blades having a different pitch than said predetermined pitch and being disposed in the space formed between said convergent nozzle and said jacket, whereby the fan moves gases forwardly with respect to the nozzle.

4. An engine according to claim 1 in which said means consists of a divergent diffuser tube connected to the mouth of said convergent nozzle, and said jacket contains pipe means connected to a source of suction.

5. An engine according to claim 1 in which said means consists of a divergent diffuser tube disposed within said jacket, one end of said divergent diffuser tube surrounding said convergent nozzle in overlapping relationship but providing an opening therebetween, the other end of said divergent diffuser tube being of greater diameter than said one end thereof and providing another opening between the other end of said divergent diffuser tube and said jacket, vanes being disposed in the exit mouth of said convergent nozzle comprising pyramidal pockets having further mouths, and rearwardly directed aerofoils mounted within the further mouths of said pyramidal pockets, said vanes and aerofoils splitting the fluid flow into a number of separate channels.

6. An engine according to claim 1 in which a baffle structure consisting of vanes is disposed within the mouth of said convergent nozzle to split the fluid flow into a number of separate channels.

7. A jet propulsion engine comprising a convergent nozzle disposed at the discharge end of said engine for discharging the exhaust thereof, a divergent diffuser tube having one end the same diameter as said convergent nozzle exit and being mounted thereon, said divergent diffuser tube extending in progressively increasing diameter to the other end thereof, a jacket having one end surrounding said convergent nozzle and the one end of said divergent diffuser tube and containing a portion extending downstream and beyond the other end of said divergent diffuser tube and means to reduce the pressure within the space between said divergent diffuser tube and said jacket, said portion having inwardly directed flanges to define an aperture having substantially the same diameter as said convergent nozzle exit, and a baffle structure disposed in said convergent nozzle to divide the exhaust into a number of separate channels to reduce the noise level of the engine.

8. A jet propulsion engine according to claim 7 in which said jacket is connected to a source of suction.

9. A jet propulsion engine according to claim 7 in which the one end of said divergent diffuser tube has an overlapping portion which overlaps said convergent nozzle in spaced relationship to define an opening therebetween, the other end of said divergent diffuser tube terminating in spaced relationship with respect to said jacket to define a further opening therebetween.

10. A jet propulsion engine according to claim 7 in which said baffle structure consists of a number of closed pyramidal pockets provided with rearwardly directed and spaced apart mouths.

11. A jet propulsion engine according to claim 10 in which rearwardly directed aerofoils are disposed within the rearwardly directed and spaced apart mouths.

12. A jet propulsion engine according to claim 7 in which said baffle structure consists of a number of rearwardly directed aerofoil vanes.

13. A jet propulsion engine comprising a turbine mounted therein, an intake disposed in the front part of said engine and communicating with said turbine to lead a fluid thereto, a convergent nozzle disposed in the back part of said engine and communicating with said turbine for discharging the exhaust fluid therefrom, a jacket surrounding substantially the entire length of said engine and spaced therefrom to define a space of reduced pressure, said jacket having a portion extending beyond said convergent nozzle, said portion of said jacket terminating into inwardly directed flanges defining an aperture having substantially the same diameter as said convergent nozzle, and a fan disposed at the discharge end of said convergent nozzle having turbine blades of a predetermined pitch located within the path of the exhaust discharging from said convergent nozzle, said turbine blades containing extensions having another pitch different from said predetermined pitch disposed in the space of reduced pressure between said jacket and said convergent nozzle, to reduce the noise level of the engine.

14. A jet propulsion engine comprising a turbine mounted therein, an intake disposed in the front part of said engine and communicating with said turbine to lead a fluid thereto, a convergent nozzle disposed in the back part of said engine and communicating with said turbine for discharging the exhaust fluid therefrom, a jacket surrounding substantially the entire length of said engine and spaced therefrom to define a space of reduced pressure said jacket having a portion extending beyond said convergent nozzle, said portion of said jacket terminating into inwardly directed flanges defining an aperture having substantially the same diameter as said convergent nozzle, and a fan disposed at the discharge end of said convergent nozzle having turbine blades of a predetermined pitch located within the path of the exhaust discharging from said convergent nozzle, said turbine blades containing extensions having another pitch different from said predetermined pitch disposed in the space of reduced pressure between said jacket and said convergent nozzle to reduce the noise level of the engine; the turbine having a further fan mounted thereon, said further fan contains blades having a predetermined pitch disposed within said intake and each blade of said further fan contains extensions disposed within the space of reduced pressure and having a different pitch from the predetermined pitch of the blades of said further fan.

References Cited in the file of this patent

UNITED STATES PATENTS

2,168,528	Kadenacy	Aug. 8, 1939
2,575,735	Servanty	Nov. 20, 1951

(Other references on following page)

UNITED STATES PATENTS

2,620,624	Wislicenus	Dec. 9, 1952
2,637,166	Carswell	May 5, 1953
2,674,087	Russell	Apr. 6, 1954
2,800,765	French	July 30, 1957
2,882,679	Karcher et al.	Apr. 21, 1959
2,892,582	O'Rourke	June 30, 1959
2,915,136	Ringleb	Dec. 1, 1959
2,920,445	Bailey	Jan. 12, 1960
2,974,744	Wade	Mar. 14, 1961
3,009,318	Skoff	Nov. 21, 1961

FOREIGN PATENTS

1,114,647	France	Dec. 19, 1955
1,199,576	France	June 22, 1959
1,208,542	France	Sept. 14, 1959
654,344	Great Britain	June 13, 1951
783,003	Great Britain	Sept. 18, 1957

OTHER REFERENCES

Harris: "Handbook of Noise Control," chapter 33; pages 35 and 36, copyright 1957 by McGraw-Hill Book Company, Inc., New York.