Dec. 29, 1964 T. E. BRAY ETAL 3,163,763

ELECTROLUMINESCENT-PHOTOCONDUCTOR DEVICES
HAVING IMPROVED INPUT-OUTPUT ISOLATION
Filed Nov. 7, 1961

FIG.1

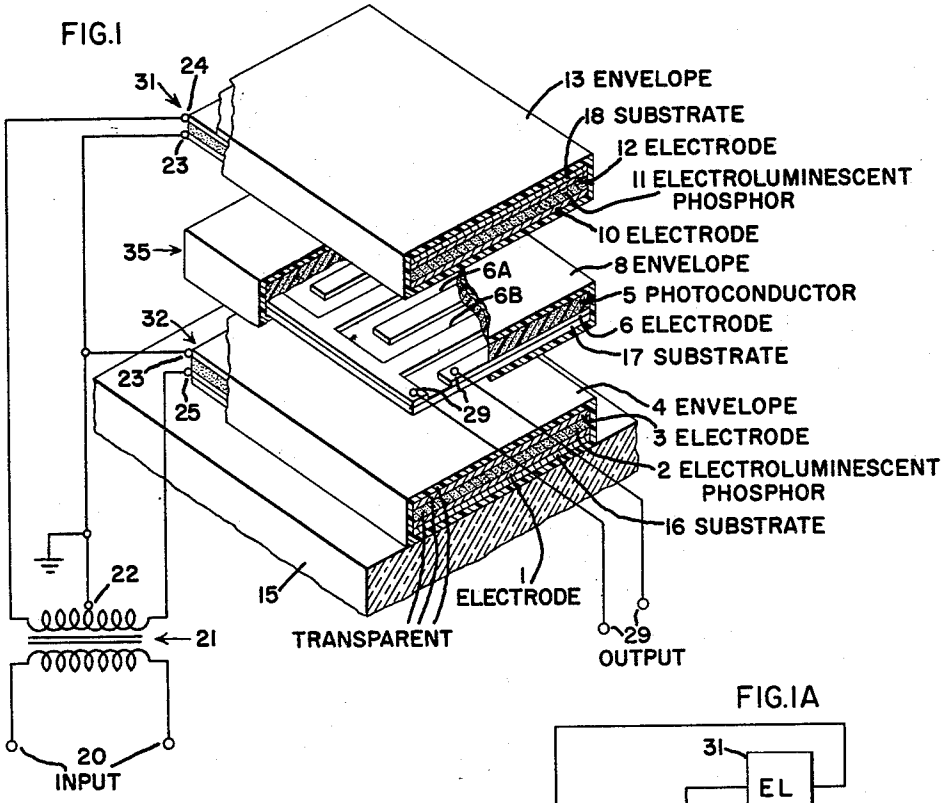

FIG.1A

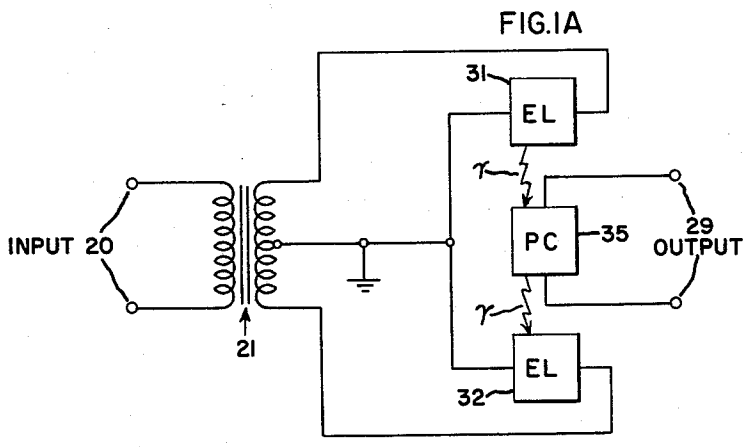

FIG.1B

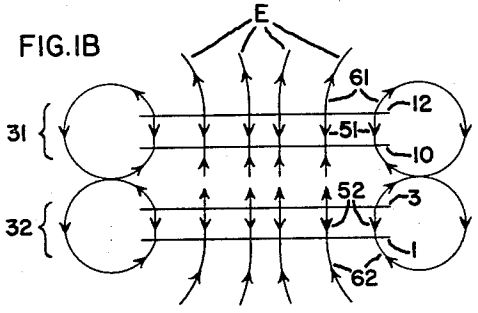

INVENTORS:
THOMAS E. BRAY,
RICHARD D. STEWART,

BY Dudley J. Brady
THEIR AGENT.

United States Patent Office 3,163,763 Patented Dec. 29, 1964

3,163,763

ELECTROLUMINESCENT - PHOTOCONDUCTOR DEVICES HAVING IMPROVED INPUT-OUTPUT ISOLATION

Thomas E. Bray, Clay, and Richard D. Stewart, Syracuse, N.Y., assignors to General Electric Company, a corporation of New York

Filed Nov. 7, 1961, Ser. No. 150,713
6 Claims. (Cl. 250—206)

This invention relates to improvements in optoelectronic devices comprised of pairs of electroluminescent and photoconductor elements which are suited for a wide variety of applications such as general switching functions, amplifiers of light or electrical energy, indicators, etc. The invention provides a construction of an electroluminescent-photoconductor pair in which there is substantially no feed-through from the input signals applied to the electroluminescent element to the output circuit of the photoconductor element. The novel construction is particularly advantageous for switching circuits which require low noise operation.

In switching applications, electroluminescent-photoconductor devices are generally four-terminal devices having a pair of On/Off output terminals which function as a SPST switch which is controlled by signals appearing at the pair of input terminals. The four-terminal devices are comprised of a photoconductor intermediate the output terminals and an electroluminescent element intermediate the input terminals which is arranged to illuminate the photoconductor. Accordingly, when a suitable energizing signal is applied to the input terminals, the electroluminescent element radiates light which illuminates the photoconductor, reducing its resistance, and effectively closes the circuit between the output terminals. In the absence of an energizing signal applied to the input terminals, the circuit between the output terminals is effectively open.

An "electroluminescent" element is here defined as an element which includes means for producing an electric field and an electroluminescent-phosphor material which is made to luminesce or emit radiation under the stimulus of the applied electric field. For a survey and bibliography of the phenomenon of electroluminescence, reference is hereby made to an article entitled "Electroluminescent and Related Topics," by Destriau and Ivey in the Proceedings of the IRE, December 1955.

A "photoconductor" element is here defined as an element having a pair of terminals bridged by a material the impedance (generally the resistance) of which varies as a function of the illumination due to radiation emitted by the particular associated light source. The nature and properties of both types of materials selected for the elements determine the electrical characteristics of the device.

Generally, electroluminescent elements radiate mostly visible light and most photoconductor elements are responsive to substantial portions of the visible light spectrum. However, it will be understood that the term "light" is used to include any electromagnetic radiation. This radiation may lie in a visible or invisible region of the spectrum. The essential factor is that the active spectra of the electroluminescent element and the photoconductor must be matched so that the resistance of the photoconductor will be dependent upon the voltage applied to the electroluminescent element.

One of the advantages of an electroluminescent-photoconductor pair is that the only theoretical connection between the input circuit and the output circuit is by means of light coupling. These circuits are therefore generally considered as electrically isolated so that currents and voltages in the respective circuits are independent except

for the light coupling effect. On this basis, electroluminescent-photoconductor switching devices can control very low level signals. The lower limit should only be fixed by the inherent noise level of the output photoconductor circuit which can be as low as on the order of 10 microvolts. As a basis of comparison, it should be noted that signals controlled by transistor switches generally have a lower limit of about 1000 microvolts. In practice, however, it has been found that the electrical isolation of optoelectronic circuits is frequently unsatisfactory.

Practical structures are generally formed with the electroluminescent and photoconductor elements in very close physical proximity to provide compactness, optimum light efficiencies, ease of fabrication, etc. It has been discovered that this proximity results in undesired signal feed-through between input signals applied to the electroluminescent element and the output circuit which includes the photoconductor element.

Photoconductors generally exhibit a response time lag which results in their maintaining the low resistance state for a finite time after removal of illumination. Although this characteristic places some restrictions on switching speeds, it is very advantageous to input-output isolation in the following respect. Most practical electroluminescent elements require an A.-C. excitation signal and exhibit a variation in brightness at twice this excitation frequency. This brightness variation should produce a corresponding variation in the photoconductor resistance which modulates the output in accordance therewith. Such a coupling of the input excitation signal at twice the input signal frequency is not observed. It is believed that the photoconductor response time lag masks this modulation.

However, the input signals required to excite the electroluminescent elements are of large amplitude (being typically 100 volts) relative to very low level signals in the output. It has been observed that these input signals, with their close proximity to the photoconductor elements, produce sufficiently large electric fields to cause substantial pick-up by the photoconductor element in the output circuit. It has also been observed that input signal currents cause signal pick-up in the output circuit by means of the associated changing magnetic fields, although this effect is much smaller than the electric field effect.

It is therefore an object of the invention to minimize signal feed-through in an optoelectronic device.

It is a further object of the invention to substantially eliminate the effects of field coupling between an electroluminescent element and a photoconductor element in an optoelectronic device.

It is a still further object to provide a compact electroluminescent-photoconductor device adapted for printed fabrication in whole or in part and which maintains effective input-output isolation.

It is another object of the invention to provide a compact electroluminescent-photoconductor switching device for low level signals in which signal feed-through due to electric and magnetic field coupling between the input and output circuits is effectively eliminated.

Briefly stated, in accordance with one aspect of the invention, the effects of undesired field coupling between electroluminescent and photoconductor elements are substantially eliminated by providing a structure in which the electric and magnetic fields cancel to produce a neutralized effect. Such a construction utilizes two electroluminescent elements which are symmetrically disposed about the photoconductor element. The coupling of the input signal to the electroluminescent element is then arranged to produce signals in the electroluminescent elements which are of opposite phase to produce a cancelling relationship in the photoconductor.

The features of the invention which are believed to be

novel are set forth with particularity in the appended claims. The invention itself, however, both as to its organization and method of operation, together with further objects and advantages thereof, may best be understood by reference to the following description when taken in connection with the drawing, wherein:

FIGURE 1 is an exploded cross sectional view in perspective of an electroluminescent-photoconductor device constructed in accordance with the invention.

FIGURE 1A is a diagram of the electrical circuit of the FIGURE 1 device.

FIGURE 1B is a diagram illustrating the electric fields about the electroluminescent elements in the FIGURE 1 device.

Referring now to the drawing and in particular to FIGURE 1 thereof, there is illustrated an exploded sectional view in perspective of an electroluminescent-photoconductor device of the present invention. The device is supported by a planar base plate **15** which is conveniently glass or other rigid electrical insulating material. The optoelectronic device is formed by arranging successive electroluminescent and photoconductor elements with specific geometrical relations and specific means for energization. In the embodiment of FIGURE 1, each element is preferably formed as successive layers upon a substrate by techniques such as those employed for "printed circuits" or analogous automated processes. The device is then formed by assembling the elements upon base plate **15** in a sandwich-like configuration.

A first planar electroluminescent element **32** is disposed upon base plate **15**. This element is conveniently formed upon a thin substrate **16** such as glass. Deposited upon and in extended area contact with substrate **16** is a light reflective conducting electrode **1** which can be an opaque thickness of aluminum or silver, for example. Deposited upon and in extended area contact with electrode layer **1** is a layer **2** comprised of a powdered crystalline mass of electroluminescent phosphor suspended in a dielectric medium, or one or more properly aligned single crystals of an electroluminescent material. Conveniently, the phosphor may be zinc sulphide activated with about 0.3% by weight of copper and dispersed in a transparent dielectric. It will, of course, be understood that these examples are given merely by way of illustration, and that any suitable electroluminescent phosphor can be used. Conveniently, electroluminescent layer **2** can be deposited by spraying a light-transmitting dielectric medium which can, for example, be nitrocellulose or an alkyd resin in which the powdered phosphor is dispersed. Upon electroluminescent layer **2** is a second electrode layer **3** which is light-transmitting and can be a conducting layer of titanium dioxide or tin oxide, commonly referred to as conducting glass, conveniently deposited upon a flexible plastic sheet. Alternatively, a very thin, light-transmitting layer of evaporated material such as aluminum or silver may be used. A thin, transparent plastic envelope **4** forms a hermetically sealed encapsulation about electroluminescent element **32**.

A planar photoconductor element **35** is disposed over electroluminescent element **32** and is coextensive therewith. This element is conveniently formed upon a thin substrate **17** such as glass. Deposited upon the substrate **17** is a photoconductor electrode **6** which is conveniently formed of platinum or indium in a manner generally similar to the electroluminescent electrode layer **1**. However, the photoconductor electrode **6** is fabricated with two separated portions, **6A** and **6B**, which form two terminal electrodes. The electrode portions **6A** and **6B** are preferably in the form of an interlocking comb-like geometry as illustrated which provides long perimeters that are uniformly spaced. Deposited upon and extending through the spaces in the photoconductor electrode structure **6** is a layer of photoconductive material **5**. This material is sufficiently thin to be translucent and can, for example, be comprised of cadmium sulfide or lead sulfide which can be sintered, sputtered, or evaporated on the electrodes **6A** and **6B**. More generally, photoconductive layer **5** can, for example, consist of any of the sulfides, selenides, or tellurides, of cadmium, lead or zinc, or can be any other photoconductor deposited in any conventional manner. The photoconductor element **35** is hermetically sealed by a thin, transparent plastic envelope **8** which, together with the envelope **4** of electroluminescent element **32**, electrically insulates the two elements.

A second planar electroluminescent **31** is placed over photoconductor element **35** and is coextensive therewith. Element **31** is formed as a mirror image of electroluminescent element **32**. Upon a glass substrate **18**, successive layers form an electrode layer **10**, an electroluminescent phosphor layer **11**, and an electrode layer **12** which are fabricated in the same manner as layers **1**, **2** and **3**, respectively. The element **31** is then hermetically encapsulated by an insulator envelope **13** in the same manner as electroluminescent element **32**.

The electroluminescent elements are energized in the following manner. A pair of input terminals **20** are connected to a transformer **21** which provides two signals which have opposite phases. The output center tap terminal **22** is connected to a source of reference potential which serves as ground and to a pair of terminals **23** on the electroluminescent electrode layers **3** and **10**. The remaining terminals of the output winding of transformer **21** are connected to terminals **24** and **25** on respective electroluminescent electrode layers **1** and **12**. The output terminals **29** of the device are connected to respective portions **6A** and **6B** of the photoconductor electrode **6**.

The operation of the device illustrated in FIGURE 1 may be considered in connection with FIGURE 1A which is a diagrammatic representation of the electric circuit of the device. The photoconductor element **35**, comprised of layers **5** and **6**, when "DARK" (not illuminated by the electroluminescent element) presents a relatively large impedence between the output terminals **29** which is effectively an open circuit. When an input signal is applied across the terminals **20**, the transformer **21** divides the signal into two parts which have a phase differential of π radians. These portions of the signal are applied to the electroluminescent elements **31** and **32** which are comprised respectively of layers **1–3** and **10–12**. While an input signal is applied across the electroluminescent elements, light is radiated which illuminates the photoconductor **35**. When the photoconductor element is illuminated, it is in a "LIT" state having a low resistance which is effectively a closed circuit between the output terminals **29**. The light coupling between each electroluminescent element and the photoconductor element operates in the usual manner to control the impedance state of photoconducor **35**. However, because each electroluminescent element **31**, **32** is energized by signals which are π radians out of phase, the voltages induced in the photoconductor by field coupling have opposite polarities and therefore cancel.

The electric fields produced by the electroluminescent elements **31** and **32** are illustrated in FIGURE 1B. Because of the nature of these elements, large electric fields **51** and **52** exist between the electrode layers to produce the electroluminescence. Accordingly, it can be seen that a large electric field flux exists between each pair of electrode layers. However, there will also be substantial electric field flux **61** and **62** about the exterior of the electroluminescent elements. The portions of this field existing between the electroluminescent elements will be present in the photoconductor element. Accordingly, there will be an effective capacitive coupling of the input signal to the output terminals through this stray capacitance. However, because of the π radians phase differential in the signals applied to elements **31** and **32**, the fields largely cancel. The neutralizing effect of the fields is in fact

dependent upon the phase differential which must be within a fraction of a radian of π radians differential.

There will also be currents flowing in the electrode layers 3 and 10 of the electroluminescent elements 31 and 32 which will produce magnetic fields. These magnetic fields will induce currents in the photoconductor 35. In practice, it has been found that there are wide variations in the kinds of current distributions encountered which depend primarily on the type of device geometry. However, the net effects are usually small relative to the electric field. When they are large, their effects can be substantially neutralized by terminal placement which produces a neutralizing effect.

In considering the effects of electric field coupling as illustrated in FIGURE 1B, it should be noted that it is insufficient to have merely opposing electric fields produced by the electroluminescent elements. The essential requirement is that the fields must be neutralized. In the FIGURE 1 embodiment, this is obtained by substantially grounding electrodes 3 and 10 and producing identical charge distributions (of opposite polarity) along the electrodes. The FIGURE 1 device would not provide sufficient input-output isolation if both the electroluminescent elements were driven in phase but with electrodes 3 and 10 connected to different input terminals because these electrodes and the photoconductor therebetween would form a capacitor-like structure which would produce substantial signal feed-through.

The achievement of the desired input-output isolation is therefore dependent upon the overall neutralizing capacitor configurations. The neutralization results from (1) providing a capacitor structure which has mirror symmetry about the photoconductor element and (2) connecting the electroluminescent element electrodes nearest the photoconductor element to a source of reference potential. Since only one electroluminescent element is required to illuminate the photoconductor element, it is evident that the FIGURE 1 device can be modified by replacing one electroluminescent element with a capacitor element which produces the same field effects as an electroluminescent element. For example, an element formed in the same manner as an electroluminescent element but without the electroluminescent phosphor addition to the dielectric between the electroluminescent element electrodes has essentially the same capacitor effects and produces the desired field neutralization. However, the use of two electroluminescent elements is advantageous for the additional light radiated and it is generally desirable because it simplifiies the formation of a device with mirror symmetry.

In a representative realization of the FIGURE 1 device, the device area is 0.25 square inch. Typical input signals are 400 cycles per second at 30 microamperes and 100 volts. Without the field neutralization construction, undesired induced signals in the photoconductor are frequently several hundred microvolts. However, the embodiment of FIGURE 1 provides a reduction of the induced voltages by an order of magnitude. If conventional shielding techniques are employed such as the insertion of transparent grounding planes between the electroluminescent and photoconductor elements, additional improvement in performance is obtained. The undesired induced voltages will be reduced by another order of magnitude, but with some loss of light efficiency.

Obviously, there are wide areas of variation in the construction of an electroluminescent-photoconductor device in accordance with the invention. It is frequently desirable to construct arrays of optoelectronic devices and the array element are conveniently formed simultaneously on common substrate members. The device of FIGURE 1 is constructed with a single pair of input terminals and a single pair of output terminals. In an application where a plurality of isolated input circuits and/or a plurality of isolated output circuits are required, they can be provided in a single device. As one example, the photoconductor elements can be separated into two isolated and symmetrical halves which have their own pairs of terminals. Such a construction provides a DPST switch. Similarly, the electroluminescent elements can be formed in separate symmetrical portions.

In the FIGURE 1 device, the electroluminescent and photoconductor elements are separately fabricated before they are assembled in a sandwich-like configuration. This form of construction simplifies the requirements for optimum fabrication conditions for the individual elements. However, the device can be formed in a single unit construction where the whole device is fabricated upon a single substrate member by successive deposition steps of the appropriate layers. The electroluminescent and photoconductor elements are then separated by transparent dielectric layers and the whole device is encapsulated with a single envelope.

Some other variations in construction include the use of different geometries such as cyclindrical surfaces and layers. Also, some modifications can be made if auxiliary light output signals are desired so as to provide a visual indication of switch state, for example. For this purpose, one or both of the exterior electrodes 1 and 12 are made light-transmitting. When transparent, these electrodes are made in the same manner as electrode layers 3 and 10. However, when light-transmitting exterior electrodes are employed rather than reflective ones, it is necessary to allow for the light loss in respect to the photoconductor element illumination.

Also, the FIGURE 1 device is illustrated as employing a photoconductor element in which the photoconductor layer 5 is not much thicker than the electrode layer 6. With this arrangement, the photoconductor layer 5 is sufficiently light-transmitting so that the light from both electroluminescent elements reaches a sufficient depth in the photoconductor layer to produce a low resistance path between the electrode portions 6A and 6B. However, since the photoconductor materials have poor light-transmission properties, it is frequently advantageous to have the photoconductor electrode extend the width of the photoconductor element with photoconductor material only in the space between the electrode portions 6A and 6B.

In the FIGURE 1 illustrated form of photoconductor 35, electrode layer 6 is not equally spaced from both electroluminescent elements. However, it has been found that the field neutralization in the photoconductor element region is sufficiently complete so as to remove any deleterious effects. However, if this spacing differential, or other factors, results in non-neutralized electroluminescent element fields, signal pick-up can often be substantially reduced by providing unequal excitation of the individual electroluminescent element. This can be obtained, for example, by providing differential attenuation of the signal portions applied to the individual electroluminescent elements or by unbalanced windings in transformer 21. The essential requirement that there be mirror symmetry at the photoconductor element is then met.

In regard to transformer 21, it is noted that device performance can frequently be improved if the reactance of the transformer is selected to produce series resonance with the capacitance of the electroluminescent elements in order to reduce the loading on the input signal source. The function of the transformer 21 is to divide the input signal into two parts having π radians phase difference. This function can, of course, be performed by other devices such as delay lines and impedance networks.

While the fundamental novel features of the invention have been shown and described as applied to illustrative embodiments, it is to be understood that all modifications, substitutions and omissions obvious to one skilled in the art are intended to be within the spirit and scope of the invention as defined by the following claims.

What is claimed is:

1. An electroluminescent-photoconductor device in a

sandwich-like configuration with improved input-output isolation comprising:

(*a*) a planar photoconductor element;

(*b*) a planar electroluminescent element arranged to illuminate said photoconductor element;

(*c*) a planar capacitor element arranged proximate said photoconductor element with mirror symmetry relative to said electroluminescent element and having a construction which produces an electric field pattern similar to that of said electroluminescent element;

(*d*) input means to derive substantially equal and out of phase voltages from input signals; and

(*e*) means coupling said input means to both said electroluminescent element and said capacitor element to produce excitation fields which are neutralized in said photoconductor element.

2. An electroluminescent-photoconductor switch in a sandwich-like configuration with improved input-output isolation comprising:

(*a*) a planar dielectric support member;

(*b*) a first planar electroluminescent element arranged on said support member and including a pair of planar electrodes between which is disposed a layer of electroluminescent material;

(*c*) a photoconductor element arranged on said electroluminescent element in optically coupled relationship and including a pair of conductive electrodes and a body of photoconductive material therebetween;

(*d*) a second electroluminescent element of substantially the same construction as said first electroluminescent element arranged on said photoconductor element in optically coupled relationship with mirror symmetry in respect to and substantially coextensive with said first electroluminescent element;

(*e*) means to ground the electrodes of said electroluminescent element nearest the photoconductor element; and

(*f*) an input transformer connected to said electrodes of said first and second electroluminescent elements to couple portions of applied A.-C. input signals to said elements having opposite phase to provide electric field neutralization in said photoconductor element.

3. An electroluminescent-photoconductor control device in a sandwich-like configuration with improved electrical isolation between the input and the output circuits comprising:

(*a*) variable resistance means for connection to an output circuit to effect control thereof comprising a planar photoconductor element whose conductivity is responsive to incident illumination;

(*b*) a pair of similar planar electroluminescent elements responsive to input electrical excitation arranged adjacent opposite surfaces of said photoconductor element and optically coupled thereto, each electroluminescent element including a pair of spaced planar electrodes between which is disposed a layer of electroluminescent material;

(*c*) connective means interconnecting the electrodes of said electroluminescent elements nearest said photoconductor element;

(*d*) input terminal means for connection to a source of input excitation signals; and

(*e*) means coupling said input terminal means to both said electroluminescent elements for excitation thereof.

4. The electroluminescent-photoconductor control device of claim 3 wherein means are provided coupled to said input terminal means to derive substantially out of phase voltages from said source, and wherein said coupling means are poled to produce excitation fields which are neutralized in said photoconductor element.

5. The electroluminescent-photoconductor control device of claim 3 wherein said connective means are connected to ground.

6. An electroluminescent-photoconductor control device in a sandwich-like configuration with improved electrical isolation between the input and output circuits comprising:

(*a*) variable resistance means for connection to an output circuit to effect control thereof comprising a planar photoconductor element whose conductivity is responsive to incident illumination;

(*b*) a planar electroluminescent element responsive to input electrical excitation arranged upon and in close proximity to one surface of said photoconductor element and optically coupled thereto, said electroluminescent element including a pair of spaced planar electrodes between which is disposed a layer of electrolumimnescent material;

(*c*) a conductive layer symmetrically arranged upon the surface of said photoconductor element opposite that of said electroluminescent element and connected to the electrode of said electroluminescent element nearest said photoconductor element;

(*d*) input terminal means for connection to a source of excitation signals coupled to said electroluminescent element for excitation thereof, said connection of said planar electrode with said conductive layer effecting a reduction of the excitation field in said photoconductor element.

References Cited by the Examiner

UNITED STATES PATENTS

1,738,397	12/29	Schriever	250—211 X
2,207,243	7/40	Dimmick	250—211 X
2,839,690	6/58	Kazan	250—213
2,931,915	4/60	Jay	250—213
3,043,961	7/62	Kazan	250—213
3,054,900	9/62	Orthuber	250—213
3,110,813	11/63	Sack	250—213

RALPH G. NILSON, *Primary Examiner.*

WALTER STOLWEIN, *Examiner.*