July 6, 1965 C. S. NUNAN 3,193,717

BEAM SCANNING METHOD AND APPARATUS

Original Filed March 9, 1959 4 Sheets-Sheet 1

Fig. 1

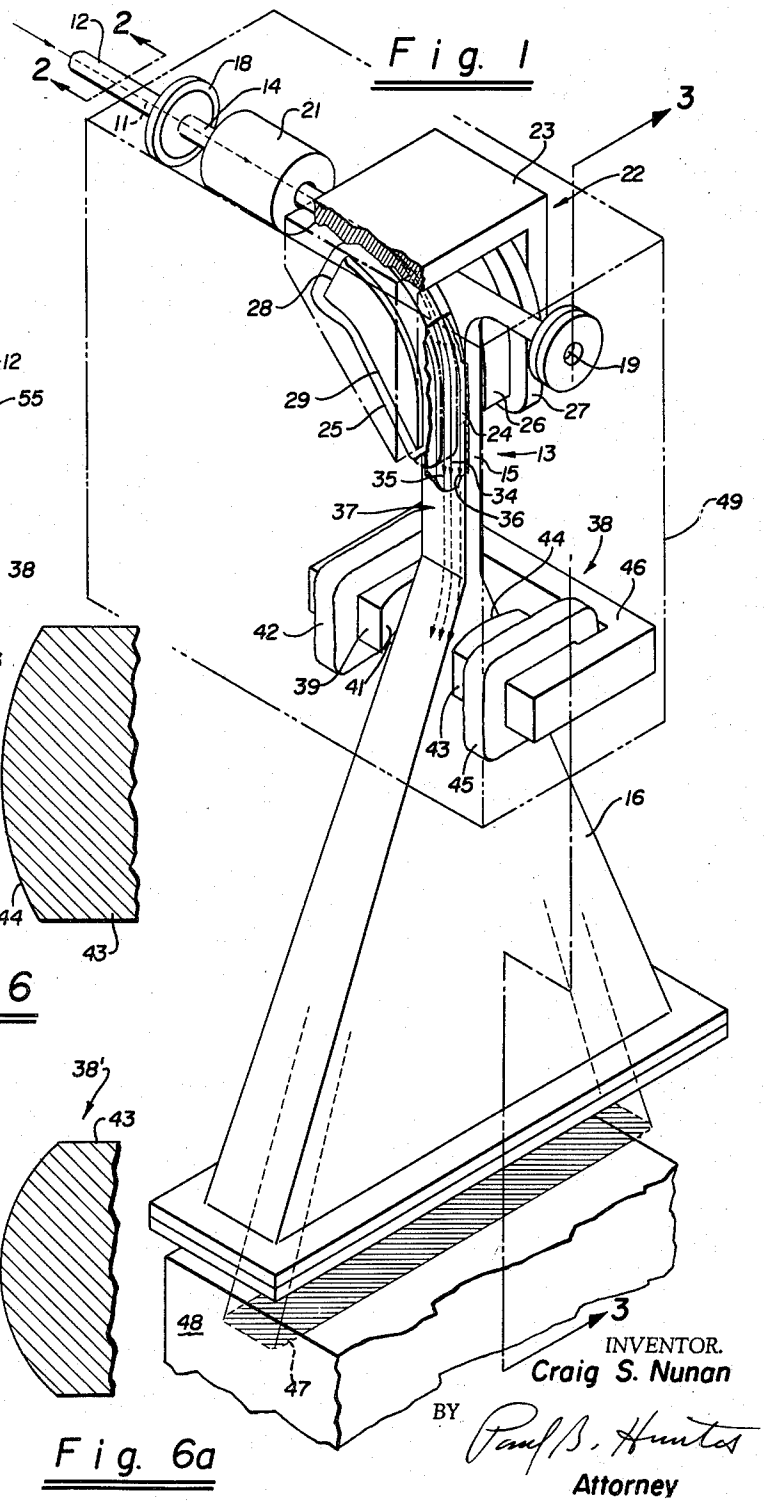

Fig. 2

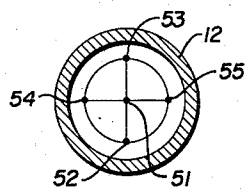

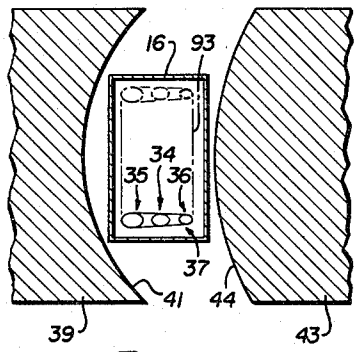

Fig. 6

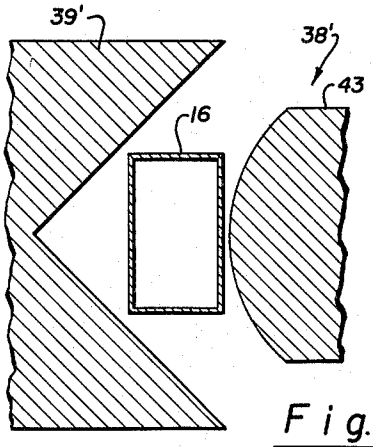

Fig. 6a

INVENTOR.
Craig S. Nunan

BY Paul B. Hunter

Attorney

July 6, 1965 C. S. NUNAN 3,193,717

BEAM SCANNING METHOD AND APPARATUS

Original Filed March 9, 1959 4 Sheets-Sheet 2

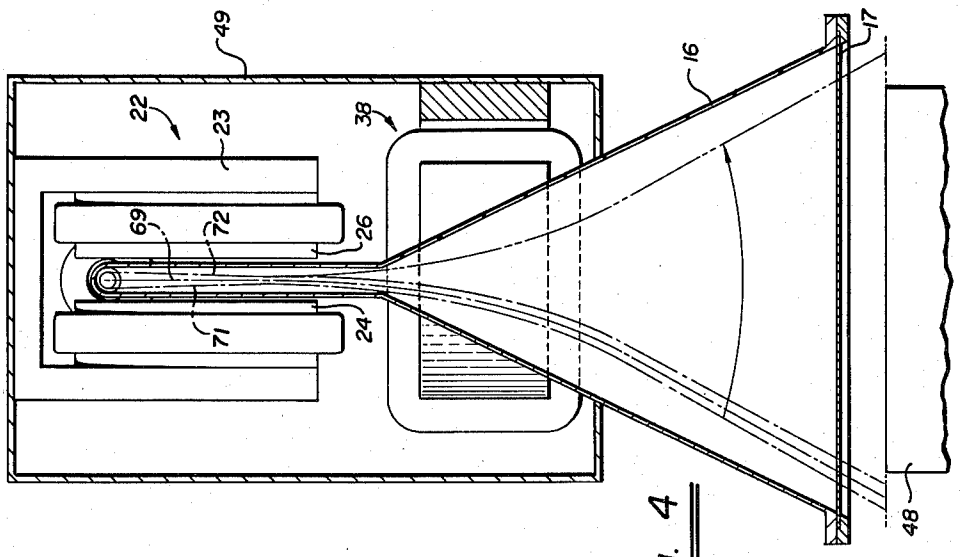

Fig. 4

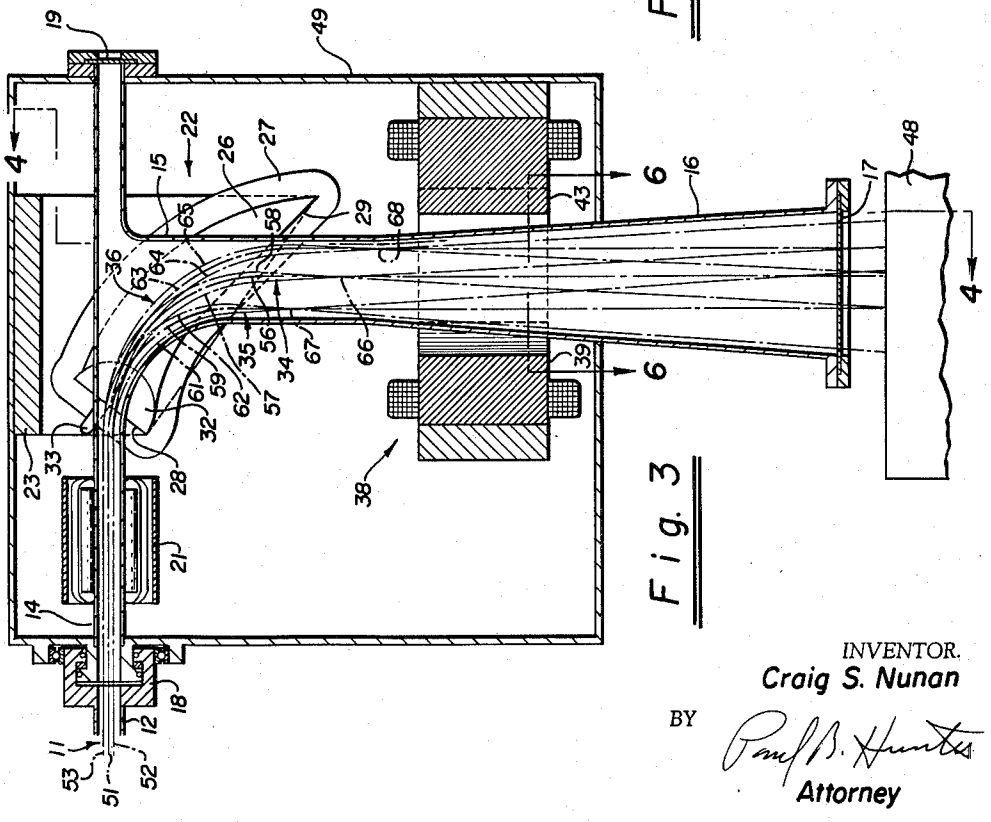

Fig. 3

INVENTOR.
Craig S. Nunan

BY

Attorney

July 6, 1965 C. S. NUNAN 3,193,717

BEAM SCANNING METHOD AND APPARATUS

Original Filed March 9, 1959 4 Sheets-Sheet 3

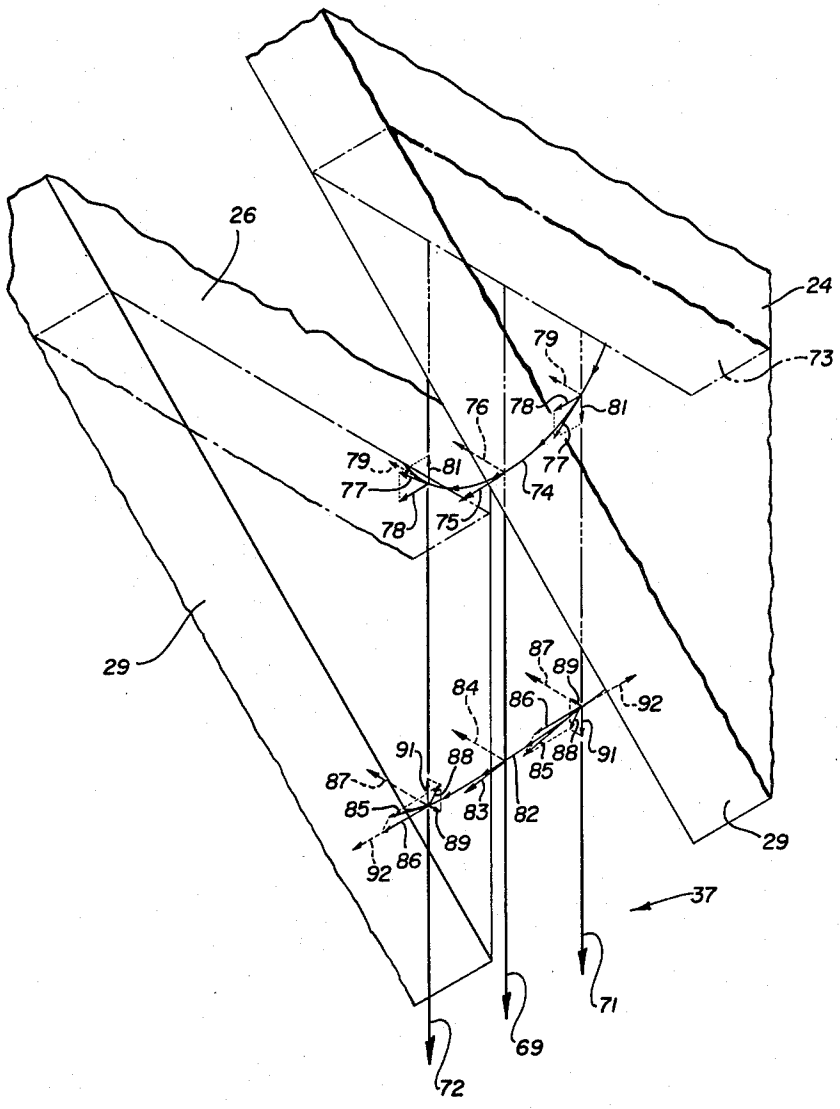

Fig. 5

INVENTOR.
Craig S. Nunan

BY Paul B. Hunter

Attorney

July 6, 1965 C. S. NUNAN 3,193,717

BEAM SCANNING METHOD AND APPARATUS

Original Filed March 9, 1959 4 Sheets-Sheet 4

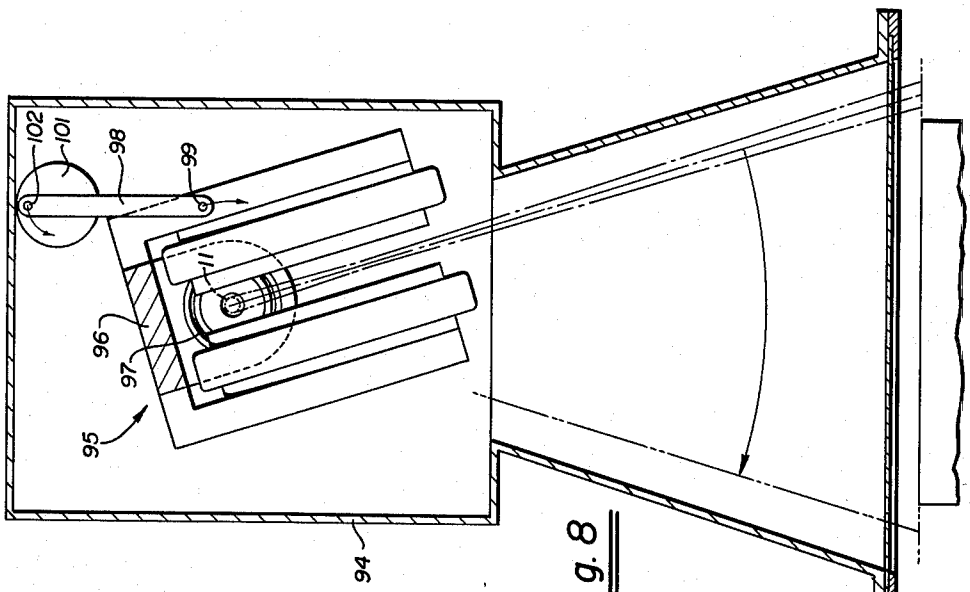

Fig. 8

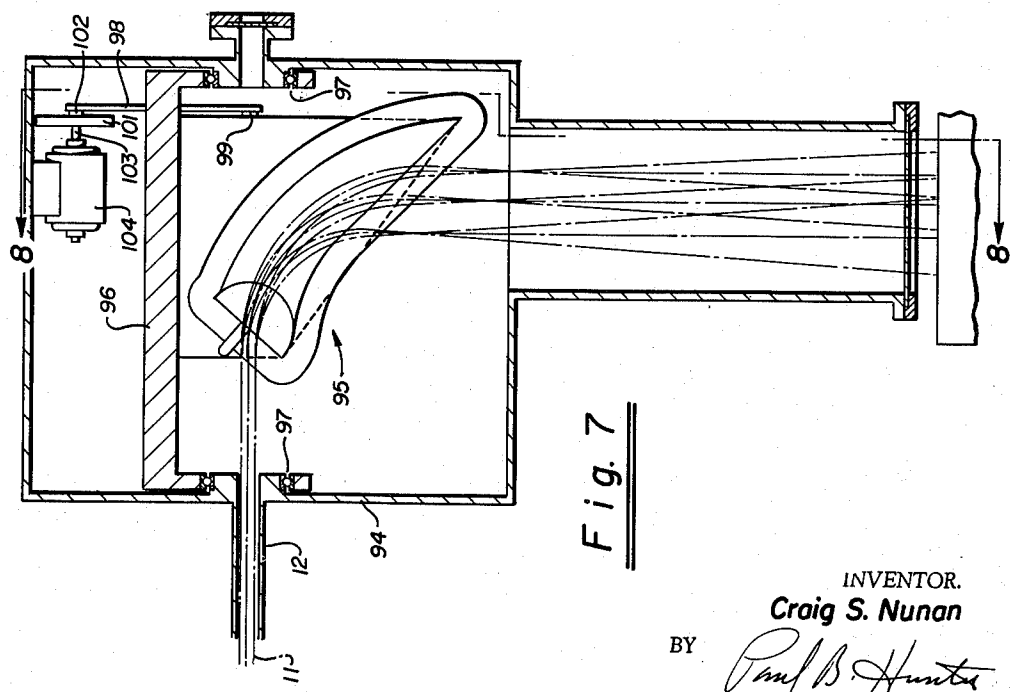

Fig. 7

INVENTOR.
Craig S. Nunan
BY
Attorney

United States Patent Office 3,193,717 Patented July 6, 1965

3,193,717

BEAM SCANNING METHOD AND APPARATUS

Craig S. Nunan, Los Altos Hills, Calif., assignor to Varian Associates, Palo Alto, Calif., a corporation of California

Continuation of application Ser. No. 798,064, Mar. 9, 1959. This application July 3, 1961, Ser. No. 123,942
21 Claims. (Cl. 313—76)

This invention relates in general to beam scanners and scanning methods and more particularly to a novel beam scanner assembly for use with particle accelerators for research, therapy, sterilization, polymerization and the like and with other apparatus where there is a need for bending particle beams and causing the bent beams to scan a surface.

This application is a continuation of application Serial No. 798,064; filed March 9, 1959, now abandoned.

It is desirable to mount particle accelerator sections on a horizontal axis to minimize shielding and maintenance and to facilitate future addition of accelerator sections, while on the other hand it is also normally desirable to scan objects from above.

There has been a need for an economical particle beam scanner assembly which incorporates the above features, and such a beam scanner assembly should include means for bending a high energy particle beam and causing the bent beam to scan across a particular surface. Normally a beam of high energy particles includes particles of many different energies, and previously difficulty has been encountered in bending a beam of different energy particles and then deflecting all of the particles of the bent beam through the same angle to scan a surface. Furthermore, beam focusing difficulties have been encountered in attempting to bend such a beam of high energy particles.

The principal object of the present invention is to provide a novel beam scanning method and efficient beam scanner assembly wherein a beam of particles such as electrons, protons, etc., is bent; then all the particles of the bent beam are deflected through approximately the same angle to scan a surface.

One feature of the present invention is the provision of a novel beam scanner assembly rotatable about the axis of a particle beam to cause the beam to scan a surface positioned at any desired angle with relation to the axis of the beam.

Another feature of the present invention is the provision of a novel beam scanner assembly including a bending magnet and a scanning magnet to cause a particle beam containing particles of different energies to scan evenly across a surface positioned at an angle with relation to the axis of the particle beam.

Another feature of the present invention is the provision of a novel bending magnet with its pole pieces aligned along opposite sides of a particle beam and its input and output edges inclined with relation to the trajectory of the particle beam to change the trajectory of particles of different energies through the same angle.

Another feature of the present invention is the provision of a novel bending magnet, an edge of which is contained in a rotatable section of the magnet for changing the angle of inclination between a particle beam and the magnet.

Another feature of the present invention is the provision of a novel scanning magnet whose pole faces have a magnetic field gradient therebetween to deflect all the particles of a particle beam with a particle energy gradient thereacross through approximately the same angle.

Another feature of the present invention is the provision of a novel bending magnet which deflects particles of different energies through the same angle and mechanical means for imparting an oscillatory motion to the bending magnet about the axis of the particle beam directed into the bending magnet to cause the deflected particles to scan evenly across a surface at an angle to the particle beam axis.

Still another feature of the present invention is the provision of a quadrupole magnet for focusing a particle beam before the beam is bent and caused to scan a surface thereby to adjust the size of the irradiating spot of particles.

Still another feature of the present invention is the provision of a novel method of scanning a particle beam containing particles of different energies wherein the particle beam is transformed into a particle beam directed in a different direction and then transformed into a scanning beam in which a ray containing all the particles of one energy level is scanned through substantially the same angle as the ray containing all the particles of a different energy level.

Still another feature of the present invention is the provision of the novel method for scanning a particle beam of the last aforementioned feature wherein when the particle beam is transformed into a particle beam directed in a different direction the particles of different energies are traveling in substantially the same direction.

Still another feature of the present invention is the provision of a novel method for scanning a particle beam with a particle energy gradient thereacross including the step of transforming each ray containing all the particles of one energy level into a scanning ray which scans through substantially the same angle as a ray containing all the particles of a different energy level.

These and other features and advantages of the present invention will be more apparent after a perusal of the following specification taken in connection with the accompanying drawings wherein,

FIG. 1 is a perspective view of an electron linear accelerator embodiment of the present invention showing the beam scanner assembly partially broken away and the trajectories of electrons of somewhat different energies through the novel beam scanner assembly,

FIG. 2 is an enlarged cross-section view of the electron orientation in an electron beam within the accelerator section of FIG. 1 taken along line 2—2 in the direction of the arrows,

FIG. 3 is an enlarged cross-section view of the structure of FIG. 1 and the electron orientation in an electron beam passing therethrough taken along line 3—3 in the direction of the arrows,

FIG. 4 is a cross-section view of the structure of FIG. 3 and the electron orientation in an electron beam passing therethrough taken along line 4—4 in the direction of the arrows,

FIG. 5 is a perspective view of the lower portion of the novel bending magnet showing the fringe magnetic field forces on a particle emerging therefrom for two possible positions of the output surface of the magnet,

FIG. 6 is a cross-section view of the structure of FIG. 3 and the electron orientation in the electron beam upon passing therethrough taken along line 6—6 in the direction of the arrows,

FIG. 6A is a modification of the magnet structure shown in FIG. 6,

FIG. 7 is a cross-section view of a further embodiment of the present invention, and

FIG. 8 is a cross-section view of one orientation of the structure of FIG. 7 taken along line 8—8 in the direction of the arrows.

The specific beam scanner depicted in the drawing and described in the following specification is especially designed for bending and scanning a beam of electrons. However, the features of the present invention are equally

applicable for bending and scanning beams of other particles such as, for example, protons. Also the novel beam scanner is adaptable for use with both pulsed and continuous beams.

Referring now to the drawings, the operation of the beam scanner will first be described in general followed by a more complete description of its novel components.

A beam of electrons 11 emerging from an accelerating section 12 of a linear accelerator positioned, for example, horizontally is passed into an evacuated chamber 13 comprising a horizontal tube 14 with a rectangular tube branch 15 projecting downwardly therefrom, and a flared scanner section 16 projecting downwardly from the end of the branch 15 and with an elongated vacuum tight window 17 at the end thereof (see FIG. 3), the scanner section 16 being rectangular in a horizontal cross-section with the longer side of the rectangle aligned perpendicularly to the axis of the tube 14. The tube 14 is axially aligned with the accelerator section 12 and is coupled thereto by a rotatable coupling 18 permitting rotation of chamber 13 about the axis of electron beam 11. The opposite end of tube 14 contains a circular vacuum tight window 19, and the side of branch 15 toward the coupled end of tube 14 contains a gradual bend at its junction with tube 14 permitting the electron beam 11 passing through tube 14 to be bent downwardly and directed through branch 15 as described below. To prevent irradiation damage, the portions of chamber 13 which are subject to electron bombardment from stray electrons are lined with liquid cooled aluminum.

A quadrupole focusing magnet 21 encircles and is axially aligned with tube 14 at its end adjacent accelerator section 12 for creating a focusing magnetic field within tube 14. A power supply (not shown) with a current control adjustment supplies direct current to focusing magnet 21 for focusing electron beam 11 either horizontally or vertically to thereby change the size of the irradiating beam of electrons issuing from the beam scanner as described below.

A bending magnet 22 is positioned with its pole pieces vertically aligned along opposite sides of electron beam 11 outside chamber 13 at the position where branch 15 leaves tube 14 for bending electron beam 11 through an angle of 90°. The bending magnet 22 is a D.C. electromagnet made up of two pole pieces mounted on a yoke 23, a north pole 24 with a set of windings 25 and a south pole 26 with a set of windings 27. The bending magnet 22 is energized by applying current to the windings 25 and 27 from a D.C. power supply (not shown) with a current control adjustment. An upper input surface 28 of bending magnet 22 is inclined at an angle of approximately 30° from vertical, and a lower output surface 29 is declined approximately 45° from horizontal.

When the bending magnet 22 is not operating, electron beam 11 will pass straight through tube 14 and out circular window 19; when the bending magnet 22 is operating, the electron beam 11 is bent downwardly through an angle of 90° due to the effect of the magnetic field between the poles 24 and 26 and passes through branch 15. An electron beam with an average electron energy of, for example, 12 mev. will be bent through 90° by the bending magnet 22 as described above with a fiield of approximately 3500 gauss. Electrons with energies greater than the average energy of the electron beam 11 will traverse a longer trajectory between the magnetic poles 24 and 26 than electrons of lesser energy before being deflected through an angle of 90°. For this reason the lower output surface 29 of bending magnet 22 is tilted at a declination of approximately 45° so that electrons of greater energies will traverse proportionately greater trajectory lengths between the poles 24 and 26, and all electrons on the original beam axis will emerge from bending magnet 22 parallel to one another after having been deflected through an angle of 90°.

A rotatable, solid, semicircular section 32 of magnet material is fitted in the input portion of each of poles 24 and 26 between the windings and the pole faces of bending magnet 22 and each of these rotatable sections 32 has a flat exposed surface, these flat surfaces making up input surface 28 (see FIG. 3). These semicircular sections can be rotated, for example, by means of a handle 33 which can be connected to both of the rotatable sections 32 to rotate these sections simultaneously, or the handle can rotate just one section at a time as shown. The input surface 28 of bending magnet 22 can be inclined at any angle to the vertical by adjustment of these rotatable sections 32 to thereby change the size of the irradiating beam of electrons issuing from the beam scanner assembly as further described below. Interchangeable sections, each with a flat input surface inclined at a different angle, can be used in place of rotatable sections 32 for selecting a particular angle of inclination for input surface 28.

The magnetic field strength of bending magnet 22 is adjusted so that an electron with an average energy of the electrons in the beam 11 follows a trajectory 34 between the poles of the bending magnet 22 and emerges from bending magnet 22 within chamber 13 approximately half-way along the declined output surface 29. When the preceding is true, an electron with, for example, 20% less energy than an average energy electron of the beam 11 follows a shorter trajectory 35 than the trajectory 34 of the average energy electron and emerges from the output surface 29 after being deflected through an angle of 90°. Similarly, an electron with, for example, 20% greater energy than the average energy electron of the beam 11 follows a longer trajectory 36 between the poles of bending magnet 22 but emerges from bending magnet 22 traveling parallel to electrons of lower energies.

The output surface 29 of bending magnet 22 can be set at angles greater or less than 45° from the direction of beam 11 by, for example, providing rotatable semicircular sections to change the angle of inclination of output surface 29 or tilting the entire bending magnet if an angle other than 45° be required to make electrons of all energies emerge parallel to one another.

Due to the manner in which bending magnet 22 deflects electrons of different energies through the same angle, a bent electron beam 37 emerges from the output surface 29 of bending magnet 22 containing an electron energy gradient thereacross. The above described relationships between the beam and the bending magnet apparatus result in an application of particle deflecting forces along the trajectories of the different energy particles passing through the bending magnet apparatus such that for all the different particle trajectories through the apparatus, the deflecting forces applied to any given particle are substantially proportionate to the energy of that particle. Therefore, particles of all energies passing through the apparatus will be deflected through substantially the same angle as pointed out in greater detail hereinafter. The bent electron beam 37 is then directed between the pole pieces of a scanning magnet 38, an A.C. electromagnet that deflects the bent electron beam 37 back and forth in a direction perpendicular to the axis of electron beam 11 to cause the bent electron beam 37 to scan across a package located below the scanner section 16 as further described below. The scanning magnet 38 comprises a pole piece 39 with a concave pole face 41 and a set of windings 42 and a pole piece 43 with a convex pole face 44 and a set of windings 45. The pole pieces 39 and 43 are positioned horizontally on the outside of chamber 13 near the top of the flared scanner section 16 by means of a yoke 46 and are aligned with the axis of electron beam 11 with the convex pole face 44 of pole piece 43 on the side of scanner section 16 adjacent the high energy side of the bent electron beam 37. The pole faces 41 and 44 of scanning magnet 38 are, for example, hyperbolic vertical planes for deflecting all the electrons of a particle beam with a particle energy gradient thereacross through substantially the same

angle in the manner described below. A current is passed through the windings 42 and 45 from a power supply (not shown) creating a magnetic field within chamber 13 between pole faces 41 and 44. A programmer (not shown) which comprises, for example, a group of beam switching tubes that develop a particular voltage waveshape to be applied to the control electrode of a triode or transistor amplifier, controls the current which flows from the power supply through the windings 42 and 45 of scanning magnet 38 thereby controlling the amplitude and direction of the magnetic field between pole faces 41 and 44 as a function of time. As the polarity of the pole pieces of the scanning magnet 38 is reversed, the bent beam is deflected back and forth within scanner section 16.

Since the pole faces 41 and 44 of scanning magnet 38 are curved surfaces, the high energy side of the bent electron beam 37 adjacent the convex pole face 44 will be acted upon by a greater component of the scanning magnet magnetic field than the lower energy side at any one instant as described in detail below, and thus by proper selection of the strength and shape of the scanning magnet, electrons of different energies are deflected back and forth through approximately the same angle. The amount which the bent electron beam 37 is deflected from its normal path by scanning magnet 38 will depend upon the strength of the magnetic field of scanning magnet 38.

The bent electron beam 37 is deflected back and forth within the flared scanner section 16 of chamber 13 and passes out through elongated window 17 to scan an area 47 of a package 48 which is moved beneath the scanning beam by means of a conveyor (not shown) so that the surface of the package 48 is irradiated by the electron beam in a desired pattern. By applying a voltage of a modified triangular waveform to scanning magnet 38, the beam will scan across the package 48 at a constant rate to produce a zig-zag pattern on the moving package, or a pattern of parallel paths across the package 48 can be produced by applying a modified sawtooth waveform to scanning magnet 38.

The beam scanner assembly including the tube 14 and branch 15 of chamber 13, focusing magnet 21, deflecting magnet 22 and scanning magnet 38 is mounted in a housing 49, and this housing 49, like the chamber 13, is coupled by rotatable coupling 18 to the accelerator section 12 for rotation about the axis of electron beam 11 to direct the scanning beam in any direction about the axis of the electron beam 11. The beam 11 can be bent through angles other than 90°, and in such case, chamber 13 would be of such shape as to allow the bent beam to pass therethrough.

As a further embodiment of the novel beam scanner assembly, the housing 49 itself is an evacuated chamber with a flared section on the bottom thereof and with the focusing, bending and scanning magnets contained therein eliminating the need for the chamber 13. In such an embodiment the bending and scanning magnets are provided with positioning means to position the magnets so that electron beam 11 can be bent through any desired angle. Also, bending magnet 22 can be adjusted so that electrons of different energies converge at output window 17 in order to minimize window width or diverge toward the output window in order to achieve a broader scanning pattern.

Referring now to FIG. 2 there is shown an enlarged cross-section view of the electron orientation in the electron beam 11 of FIG. 1. Since all the electrons of the same energy are not concentrated at any one point on the cross section of the electron beam, the beam scanner assembly must focus all the electrons of the same energy level so that the electron beam scans properly. For purposes of illustration, electrons traveling at different positions on the cross section of the electron beam will be examined to show the effect on them while passing through the novel beam scanner. To study the effect of the beam scanner, points 51, 52, 53, 54 and 55 are respectively selected on the axis, at the bottom, at the top, at the left side and at the right side of the electron beam 11 for examination.

Referring now to FIG. 3 there are shown the electron trajectories for the electron beam 11 and the structure of the novel beam scanner on a plane taken vertically through the electron beam 11 and the scanning magnet 38 and between the pole pieces of the bending magnet 22. In this figure are shown the vertical positions 51, 52 and 53 taken from the cross section of the electron beam in FIG. 2 and the trajectories 34, 35 and 36 through the bending magnet 22 for electrons of the different energy levels. For trajectory 34 electrons of average energy traveling along the axis 51 of the electron beam 11 will traverse a path 56 through bending magnet 22 and will emerge from output surface 39 after having been deflected through an angle of 90°. Average energy electrons traveling along the bottom 52 and the top 53 of the electron beam 11 will traverse paths 57 and 58, respectively, the path 57 being shorter and the path 58 being longer than the path 56. In a similar manner electrons of energy 20% below average traveling along the vertical positions 51, 52 and 53 of the electron beam 11 will traverse paths 59, 61 and 62, respectively through the bending magnet 22 and electrons with energy 20% above average traveling along vertical positions 51, 52 and 53 of the electron beam 11 will traverse paths 63, 64 and 65, respectively through bending magnet 22, the electrons that were traveling along the bottom position 52 of the electron beam 11 always being deflected through an angle slightly less than 90° and those that were traveling along the top position 53 always being deflected through an angle of slightly greater than 90°. All the electrons of the same energy level will pass through a focal point after emerging from the lower face 29 of bending magnet 22, the focal points for the average, 20% below average and 20% above average energy trajectories being 66, 67 and 68, respectively, and after passing through the focal points for the respective electron energy levels the electrons of the same energy level which were traveling at the top of the electron beam 11 and those at the bottom will follow diverging paths.

Referring now to FIG. 4 there is shown a cross section of the structure of FIG. 3 taken along line 4—4 in the direction of the arrows and showing the paths through the beam scanning assembly of the electrons horizontally displaced from the axis of the electron beam 11. Electrons of all energies traveling along the sides of the electron beam 11 at the left and right positions 54 and 55 respectively behave essentially the same as an electron traveling along the axis position 51 with regard to the deflecting effects discussed above in referring to FIG. 3. Electrons traveling along the vertical axis of electron beam 11 pass through bending magnet 22 along a median plane 69 midway between pole pieces 24 and 26. However, electrons such as traveling along the left and right positions 54 and 55, respectively, horizontally displaced across the electron beam 11 travel off axis paths 71 and 72, respectively, through bending magnet 22 and are acted upon by the focusing and defocusing effects of the fringe magnetic field between pole pieces 24 and 26 as described in detail below.

Referring now to FIG. 5 there is shown the lower portion of bending magnet 22 and the fringe magnetic field forces affecting the bent electron beam 37 emerging vertically downwardly therefrom with the output surface 29 declined at an angle of 45° from the horizontal and, as an alternative for purposes of illustration, with an output surface 73 positioned horizontally. When an electron beam emerges from between the poles of a magnet and normal to the output surface thereof with electrons traveling outside of the median plane 69 such as along the off-axis paths 71 and 72, the electron beam is only affected by the bending effects of the magnet and is not

deflected toward or away from the pole pieces. A fringe magnetic field denoted by the line of flux 74 at the horizontal output surface 73 affects electrons traveling along median plane 69 with a magnetic field force 75 that is perpendicular to the electron path and to the magnet pole faces thereby producing a beam bending force 76 which bends the beam as described above, but the fringe magnetic field affects electrons traveling along the off-axis paths 71 and 72 with a magnetic field force 77 which has a component 78 that is perpendicular to the electron path and to the magnet pole faces thereby producing a beam bending force 79 and a component 81 that is parallel to the electron path thereby producing no effect on the electrons.

However, when an electron beam emerges from between the poles of a magnet and is not normal to the output surface thereof, electrons traveling outside the median plane 69 are affected by a force tending to deflect them toward or away from the median plane depending upon whether the electrons are respectively being deflected away from or toward the normal to the output surface from which the electron beam emerges. A fringe magnetic field denoted by a flux line 82 at the output surface 29 which is declined at an angle of approximately 45° affects electrons traveling along median plane 69 with a magnetic field force 83 that is perpendicular to the electron path and to the magnetic pole faces thereby producing a beam bending force 84 which bends the beam as described above, but this fringe magnetic field affects electrons traveling along off-axis paths 71 and 72 with a magnetic field force 85 which has a component 86 that is perpendicular to the electron path and to the magnet pole faces thereby producing a beam bending force 87 and a component 88 that lies in a plane with the off-axis electron path, this plane containing the component 88 and the off-axis electron path being parallel to the median plane 69. The component 88 itself can be broken into two subcomponents 89 and 91 within the plane of component 88 and the off-axis electron path, subcomponent 89 being perpendicular to the electron path thereby producing a beam defocusing force 92 and subcomponent 91 being parellel to the electron path thereby producing no effect on the electrons. Since the fringe magnetic field is caused by flux lines which bow out from the output surface of the magnetic field, electrons traveling along off-axis paths 71 and 72 will be affected by beam defocusing forces in opposite directions so that the whole beam is defocused.

Thus, if a magnet bends an electron beam toward the normal to an output face, defocusing occurs in the fringe magnetic field at that face while if the beam is bent away from the normal to that output face a focusing effect takes place in the fringe magnetic field. However, at an input face of a magnet, an electron beam that is bent toward the normal to that face upon entering the magnet is caused to be focused in the fringe magnetic field while an electron beam that is bent away from the normal is caused to be defocused.

The defocusing effect is created at the output surface 29 of bending magnet 22 when output surface 29 is inclined approximately 45° from the horizontal in order that electrons of different energy levels emerge parallel to one another. The input surface 28 of bending magnet 22 is adjustably inclined, for example, at approximately 30° from vertical by means of the rotatable sections 32 to focus the electron beam 11 toward the median plane 69 by means of the focusing effect on electron beam 11 by the fringe magnetic field at the bending magnet input surface to compensate for the above described defocusing effect at the output surface, thereby changing the width of the irradiating spot on package 48. For the purposes of the illustration here, the input surface 28 is inclined at only 30° while the output surface 29 is declined at 45° so that the beam emerging from bending magnet 22 diverges to create an irradiating spot wider than the width of electron beam 11.

Referring now to FIG. 6 there is shown a cross-section view of the lower portion of the scanning magnet 38 showing a cross section of bent electron beam 37 as it is leaving the magnetic field of the scanning magnet 38. The bent electron beam 37 describes in cross section somewhat of an elliptical spot with the electron trajectories of different energies linearly disbursed thereacross. Within the cross section of the bent electron beam 37 are separate elliptical cross sections for the average, 20% below average, and 20% above average energy electron trajectories 34, 35 and 36 with the paths of the electrons originally traveling at positions 52, 53, 54 and 55 of electron beam 11 lying on the ends and sides of the ellipse for each energy level. Bent electron beam 37 is deflected back and forth within scanning magnet 38 through an approximately rectangular area 93.

Due to the curved surfaces of the pole faces of scanning magnet 38, the flux density of the magnetic field between the pole pieces of scanning magnet 38 increases from the concave pole face 41 to the convex pole face 44. As the radius of curvature of convex pole face 44 is made greater than the radius of curvature of concave pole face 41, the flux density gradient between pole faces 41 and 44 increases, and, the desired flux density gradient between pole faces 41 and 44 is achieved by use of pole faces with the proper difference between their radii of curvature. The scanning magnet magnetic field component perpendicular to the direction of the scan acts upon the bent electron beam 37 to scan it back and forth, and since the flux density gradient between pole faces 41 and 44 increases toward the convex pole face 44, all the electrons of bent electron beam 37 with its high energy side adjacent convex pole face 44 will be scanned through approximately the same angle. Thus it is seen that the relationship between the beam having an energy gradient thereacross and the scanning magnet magnetic field is such that deflecting forces are applied along the trajectories of the different energy particles through the magnetic field such that for all the different particle trajectories through the magnetic field the deflecting forces applied to any given particle are substantially proportionate to the energy of that particle. Therefore, particles of different energies will be simultaneously deflected through approximately the same angle.

The pole faces of the scanning magnet 38 can be of any other shape, for example, vertical planes which are semi-cylindrical or V-shaped in horizontal cross section, or even planes curved in a vertical direction, as long as there is a flux density gradient therebetween. For purposes of illustration the concave pole face 41 in FIG. 6A is V-shaped in horizontal cross section and there will still be a flux density gradient between the pole pieces increasing from concave pole piece 39′ to convex pole piece 43.

Referring now to FIGS. 7 and 8 there is shown a further embodiment of the present invention. The electron beam 11 emitted from accelerating section 12 is passed into an evacuated housing 94 in which it is bent through an angle of, for example, 90° by means of a bending magnet 95 similar to bending magnet 22 described above. The electron beam is deflected back and forth perpendicular to the axis of electron beam 11 by mechanical movement of the bending magnet 95 to impart a scanning motion to the bent beam. Mechanical movement of bending magnet 95 is accomplished by, for example, imparting an oscillatory motion to a yoke 96 of bending magnet 95 by rotating the yoke 96 in ball bearing sleeves 97 about an axis coincident with the axis of the electron beam 11. A rod 98 is pivotally connected to the yoke 96 by a pivot 99 and to a flywheel 101 by a pivot 102. The flywheel 101 is mounted on a drive shaft 103 which is in turn driven by a motor 104 fixed on the inside of the top of housing 94, and when the flywheel 101 rotates, the rod 98 is moved up and down imparting an oscillatory motion to bending magnet 95.

As is apparent from the above, the size of the scanning spot can be adjusted in various ways. The width of the spot in the direction of scan may be adjusted, for example, by changing the angle of the input surface 28 of bending magnet 22 or by first focusing the beam with the quadrupole focusing magnet 21 and the length of the spot by changing the angle of the output surface 29 of bending magnet 22, by varying the field strength of bending magnet 22, or by first focusing the beam with quadrupole focusing magnet 21 (see FIG. 1).

The axis of accelerating section 11, of course, need not be horizontal, but this orientation is usually more advantageous.

Since many changes could be made in the above construction and many apparently widely different embodiments of this invention could be made without departing from the scope thereof, it is intended that all matter contained in the above description or shown in the accompanying drawing shall be interpreted as illustrative and not in a limiting sense.

What is claimed is:

1. A bending magnet for bending a particle beam whereby after the beam is bent there is a particle energy gradient across the bent beam said bending magnet comprising opposing pole pieces adapted to be aligned along opposite sides of the particle beam, said pole pieces having their output surface tilted at an acute angle to the high energy side of the particle beam which has emerged from the output surface so that particles of greater energies will travel longer trajectories through said bending magnet and thereby particles of all energies will be deflected through substantially the same angle, said acute angle being less than 60°, said acute angle being measured, between any given high energy side particle trajectory emanating from said output surface and said output surface, in a direction rotated away from the lower energy side of said bent beam having a particle energy gradient thereacross.

2. The bending magnet of claim 1 including means for positioning the input surface of said magnet at different angles relative to the particle beam directed into said bending magnet including a rotatable section of magnetic material fitted in the input portion of each of said pole pieces, said rotatable sections having a flat exposed surface which operates as the input surface of said bending magnet whereby said rotatable sections can be rotatably positioned to change the angle of inclination of the input surface of said bending magnet with relation to the particle beam directed into said bending magnet.

3. The bending magnet of claim 1 including means for adjustably positioning the output surface of said pole pieces at a selected acute angle with the high energy side of the particle beam which has emerged therefrom for deflecting particles of different energies through selected angles.

4. Means for imparting a scanning motion to a particle beam with a particle energy gradient thereacross comprising an electromagnet having windings thereon, said electromagnet having a pair of pole pieces adapted and arranged to provide a flux density gradient therebetween said particle beam being adapted and arranged in relation to said electromagnet such that said particle beam is directed between the pole faces of said electromagnet with the particles of greater energy arranged to pass through a portion of the magnetic field with a correspondingly greater flux density and the particles of lesser energy arranged to pass through a portion of the magnetic field with a correspondingly lesser flux density whereby particles of different energies are simultaneously deflected through substantially the same angle and means for supplying time varying current to the windings of said electromagnet such that the amplitude of the magnetic field between the pole pieces of said electromagnet is controlled as a function of time thereby to determine the path which the scanning particle beam will trace.

5. Apparatus for scanning a particle beam containing particles of different energies comprising in combination means for bending the particle beam directed into said scanning apparatus whereby after the beam is bent there is a particle energy gradient across the bent beam and means for imparting a scanning movement to the bent beam, said scanning means including a scanning magnet, the pole pieces of said scanning magnet having a flux density gradient therebetween whereby the bent beam is directed between the pole faces of said scanning magnet with the particles of greater energy arranged to pass through a portion of the scanning magnet magnetic field with a correspondingly greater flux density thereby simultaneously to deflect particles of different energies through approximately the same angle.

6. The beam scanning apparatus of claim 5 wherein said bending means includes a bending magnet having its pole pieces aligned along opposite sides of the particle beam and having its output surface tilted at an acute angle to the high energy side of the beam which has emerged therefrom so that particles of greater energies will travel longer trajectories through said bending magnet and thereby particles of all energies will emerge from said bending magnet having been bent through substantially the same angle.

7. The beam scanning apparatus of claim 6 including means for positioning the input surface of said bending magnet with relation to the particle beam directed into said bending magnet thereby to control the spot size and shape of the particle beam issuing from said apparatus.

8. The beam scanning apparatus of claim 5 wherein said bending means and said scanning means are mounted outside an evacuated chamber through which the particle beam passes, said chamber having means for passing the particle beam into and out of said chamber and having a rotatable coupling means whereby said chamber, said bending means and said scanning means can be rotated about the axis of the particle beam directed into said chamber thereby to direct the scanning beam in any direction about the axis of the particle beam.

9. Apparatus for bending and scanning a particle beam said apparatus comprising an evacuated housing with means for passing a particle beam into and out of said housing, means for bending a particle beam directed into said housing to thereby form a particle energy gradient across the bent beam, said bending means including a bending magnet mounted within said housing and having means for selecting the angles which the input and output surfaces of said bending magnet make with the particle beam, and means for imparting a scanning movement to the bent beam, said scanning means including a scanning magnet, the pole pieces of which have a flux density gradient therebetween said bent beam being adapted and arranged relative to said scanning means such that said bent beam is directed between the pole faces of said scanning magnet with the bent beam arranged so that particles of greater energy pass through a portion of the scanning magnet magnetic field with a correspondingly greater flux density and particles of lesser energy pass through a portion of the scanning magnet magnetic field with a correspondingly lesser flux density whereby particles of different energies are simultaneously deflected through approximately the same angle.

10. Apparatus for scanning a particle beam comprising in combination means for bending the particle beam directed into said scanning apparatus and means for oscillating said bending means about an axis coincident with the axis of the particle beam thereby to bend the particle beam and impart a scanning movement to the bent beam, said bending means including a bending magnet with its pole pieces aligned along opposite sides of the particle beam, said bending magnet having its output surface tilted at an angle to the emerging beam and having the input surfaces of said pole pieces contained in rotatable sections of said bending magnet whereby the angle of

incidence between the particle beam and the plane of said input surfaces can be changed by rotation of said rotatable sections thereby adjusting the focusing effect that the fringe magnetic field of said bending magnet has on the particle beam passing therethrough.

11. Apparatus for scanning a particle beam comprising in combination means for bending the particle beam directed into said scanning apparatus, means for oscillating said bending means about an axis coincident with the axis of the particle beam thereby to bend the particle beam and impart a scanning movement to the bent beam, an evacuated chamber with means for passing a particle beam into and out of said chamber with said bending means and the means for oscillating said bending means located inside said chamber and rotatable coupling means rotatably supporting said bending means with said chamber said bending means and said means for oscillating said bending means being adapted and arranged to direct said scanning beam in any direction about the axis of the particle beam.

12. Apparatus for scanning a particle beam containing particles of different energies comprising in combination an evacuated chamber adapted for passing a particle beam therethrough and provided with means for rotatable attachment to a particle accelerator; means for bending the particle beam path within said chamber whereby after the beam is bent there is a particle energy gradient across the particle beam, said bending means including a bending magnet fixed around said chamber with its pole pieces aligned along opposite sides of the particle beam path, said bending magnet having its output face tilted at an acute angle to the high energy side of the beam which has emerged therefrom and having the input surfaces of said pole pieces contained in rotatable sections of said bending magnet whereby the angle of incidence between the particle beam and the plane of said input surfaces can be changed by rotating said rotatable sections; and means for imparting a scanning movement to the particle beam whereby particles of different energies are scanned through approximately the same angle, said scanning means including a scanning magnet fixed around said chamber with the pole faces of said scanning magnet being of such shape as to create a flux density gradient therebetween whereby the bent beam is directed between the pole faces of said scanning magnet with the high energy side of the bent beam aligned with the high flux density side of the field of said magnet thereby to deflect particles of different energies back and forth through the same angle.

13. A bending magnet for bending a particle beam whereby after the beam is bent there is a particle energy gradient across the bent beam said bending magnet comprising opposing pole pieces adapted to be aligned on opposite sides of the particle beam, said pole pieces having their output surface tilted at an acute angle to the high energy side of the particle beam which has emerged from the output surface so that particles of greater energies will travel longer trajectories through said bending magnet and thereby particles of all energies will be deflected through substantially the same angle said acute angle being less than 60°, said acute angle being measured between any given high energy side particle trajectory emanating from said output surface and said output surface, in a direction rotated away from the lower energy side of said bent beam having a particle energy gradient thereacross and the input surface of said magnet positioned at an angle to the particle beam directed into said bending magnet thereby to control the spot size and shape of the particle beam issuing from said bending magnet.

14. Apparatus for bending and scanning a particle beam said apparatus comprising an evacuated housing with means for passing a particle beam into and out of said housing, means for bending a particle beam when directed into said housing whereby after the beam is bent there is a particle energy gradient across the bent beam, and means for imparting a scanning movement to the bent beam, said scanning means including a scanning magnet, the pole pieces of which have a flux density gradient therebetween whereby the bent beam is directed between the pole pieces of said scanning magnet with the bent beam arranged so that particles of greater energy pass through a portion of the scanning magnetic field with a correspondingly greater flux density thereby to deflect particles of different energies through approximately the same angle.

15. Apparatus for scanning a particle beam comprising in combination means for bending a particle beam directed into said scanning apparatus and means for oscillating said bending means about an axis coincident with the axis of the particle beam thereby to bend the particle beam and impart a scanning movement to the bent beam, said bending means including a bending magnet with its pole pieces aligned along opposite sides of the particle beam, the output surface of said bending magnet being tilted at an acute angle to the high energy side of the particle beam emerging from said output surface and the input surface of said bending magnet being positioned at an angle to the particle beam directed into said bending magnet thereby to control the spot size and shape of the particle beam issuing from said apparatus.

16. The apparatus of claim 14 wherein said means for bending a particle beam comprises opposing pole pieces adapted to be aligned on opposite sides of the particle beam, said pole pieces having their output surface tilted at an acute angle to the high energy side of the particle beam which has emerged from the output surface so that particles of greater energies will travel longer trajectories through said bending magnet and thereby particles of all energies will be deflected through substantially the same angle, and the input surface of said magnet positioned at an angle to the particle beam directed into said bending magnet thereby determining the spot size and shape of the irradiating beam of particles issuing from said apparatus.

17. Apparatus for scanning a particle beam with a particle energy gradient thereacross including a first means and a second means, said first and second means positioned on opposite sides of said particle beam from one another said first and said second means being adapted and arranged to apply deflecting forces having non-zero field density gradients along the trajectories of the different energy particles through said apparatus such that for all the different particle trajectories through the apparatus all the deflecting forces applied to any given particle is substantially proportionate to the energy of that particle thereby simultaneously to deflect particles of different energies through approximately the same angle.

18. Apparatus for scanning a particle beam containing particles of different energies comprising in combination means for bending the particle beam directed into said scanning apparatus to thereby form a particle energy gradient across the bent beam and means for imparting a scanning movement to the bent beam, said bending means including means for applying particle deflecting forces along the trajectories of different energy particles through said bending means such that for all the different particle trajectories through said bending means the sum of all the deflecting forces applied to any given particle is substantially proportionate to the particle energy whereby all the particles emerging from said bending means have been deflected through substantially the same angle and said scanning means including means for applying deflecting forces along the trajectories of the different energy particles through said scanning apparatus such that for all the different particle trajectories through said scanning means the sum of all the deflecting forces applied to any given particle is substantially proportionate to the particle energy thereby simultaneously to deflect

particles of different energies through approximately the same angle.

19. Apparatus for bending a beam of charged particles having essentially equal rest mass energies and a range of kinetic energies whereby after the beam is bent there is a particle energy gradient across the bent beam, said apparatus including means for applying deflecting forces along the trajectories of the different energy particles having a range of kinetic energies forming said beam such that for all the different particle trajectories through the apparatus the deflecting forces applied to any given particle is substantially proportionate to the energy of that particle whereby particles of all energies passing through said apparatus will be deflected through substantially the same angle such that there is a particle energy gradient across said bent beam, means for scanning said bent beam having a particle energy gradient thereacross, said scanning means adapted and arranged to apply deflecting forces to said bent beam such that for all the different particle trajectories of said bent beam the sum of all the deflecting forces applied to any given particle is substantially proportionate to the energy of that particle thereby simultaneously deflecting particles of different energies through approximately the same angle.

20. An apparatus for scanning a particle beam containing particles of different energy levels randomly dispersed therein comprising first means for transforming said particle beam containing particles of different energy levels randomly dispersed therein into a particle beam directed in a different direction with a particle energy gradient thereacross, said first transforming means including means for applying variable deflecting forces to the various particles, which forces are substantially proportional to the energy of each of the various particles, second means positioned downstream of said first transforming means for transforming the particle beam with the particle energy gradient thereacross into a scanning beam, said second transforming means scanning said particle beam such that a ray containing all the particles of one energy level is scanned through substantially the same angle as is a ray containing all the particles of a different energy level, said second transforming means including means for applying deflecting forces having non-zero field density gradients, said deflecting forces being substantially proportional to the energy of each of the various particles in said particle beam having a particle energy gradient thereacross.

21. Apparatus for scanning a particle beam with a particle energy gradient thereacross comprising means for applying to each of the various particles in the particle beam with the particle energy gradient thereacross deflecting forces having non-zero field density gradients, which forces are substantially proportional to the energy of each of said various particles in said particle beam with the particle energy gradient thereacross, and means for varying said deflecting forces to scan said particle beam such that a ray containing all the particles of one energy level is scanned through substantially the same angle as a ray containing all the particles of a different energy level.

References Cited by the Examiner

UNITED STATES PATENTS

2,004,099	6/35	Bedford	313—76
2,551,544	5/51	Nier et al.	313—75 X
2,559,657	7/51	Page	315—23
2,760,096	8/56	Longini	313—65
3,013,154	12/61	Trump	313—84 X

FOREIGN PATENTS

1,020,193	11/52	France.

GEORGE N. WESTBY, *Primary Examiner.*

RALPH G. NILSON, *Examiner.*