(12) INTERNATIONAL APPLICATION PUBLISHED UNDER THE PATENT COOPERATION TREATY (PCT)

(19) World Intellectual Property Organization
International Bureau

(43) International Publication Date
02 November 2023 (02.11.2023)

WIPO | PCT

(10) International Publication Number
WO 2023/209702 A1

(51) International Patent Classification:
B66B 9/02 (2006.01) *B66B 9/187* (2006.01)

(21) International Application Number:
PCT/IL2023/050412

(22) International Filing Date:
23 April 2023 (23.04.2023)

(25) Filing Language: English

(26) Publication Language: English

(30) Priority Data:
292435 24 April 2022 (24.04.2022) IL

(72) Inventor; and
(71) Applicant: **SEVER, Oded** [IL/IL]; POB 220, 3601101 Kiryat Tivon (IL).

(74) Agent: **SERUYA, Yehuda**; REINHOLD COHN & PARTNERS, POB 13239, 6113102 Tel-Aviv (IL).

(81) Designated States *(unless otherwise indicated, for every kind of national protection available)*: AE, AG, AL, AM, AO, AT, AU, AZ, BA, BB, BG, BH, BN, BR, BW, BY, BZ, CA, CH, CL, CN, CO, CR, CU, CV, CZ, DE, DJ, DK, DM, DO, DZ, EC, EE, EG, ES, FI, GB, GD, GE, GH, GM, GT, HN, HR, HU, ID, IL, IN, IQ, IR, IS, IT, JM, JO, JP, KE, KG, KH, KN, KP, KR, KW, KZ, LA, LC, LK, LR, LS, LU, LY, MA, MD, MG, MK, MN, MU, MW, MX, MY, MZ, NA, NG, NI, NO, NZ, OM, PA, PE, PG, PH, PL, PT, QA, RO, RS, RU, RW, SA, SC, SD, SE, SG, SK, SL, ST, SV, SY, TH, TJ, TM, TN, TR, TT, TZ, UA, UG, US, UZ, VC, VN, WS, ZA, ZM, ZW.

(84) Designated States *(unless otherwise indicated, for every kind of regional protection available)*: ARIPO (BW, CV, GH, GM, KE, LR, LS, MW, MZ, NA, RW, SC, SD, SL, ST, SZ, TZ, UG, ZM, ZW), Eurasian (AM, AZ, BY, KG, KZ, RU, TJ, TM), European (AL, AT, BE, BG, CH, CY, CZ, DE, DK, EE, ES, FI, FR, GB, GR, HR, HU, IE, IS, IT, LT, LU, LV, MC, ME, MK, MT, NL, NO, PL, PT, RO, RS, SE, SI, SK, SM, TR), OAPI (BF, BJ, CF, CG, CI, CM, GA, GN, GQ, GW, KM, ML, MR, NE, SN, TD, TG).

Published:
— *with international search report (Art. 21(3))*

WO 2023/209702 A1

(54) **Title:** ELEVATOR SYSTEM, KIT AND METHOD

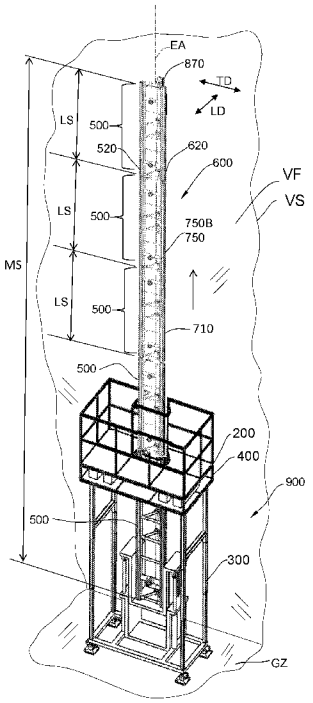

Fig. 2

(57) **Abstract:** A kit provides an elevator system defining an elevator transport axis with respect to an exposed vertical face of a vertical structure. The kit includes an elevator platform, rail segment modules having elevator rail element(s), a base structure and a rail segment stacking system. The rail segment modules can be serially stacked contiguously via the rail segment stacking system to provide a mast stack, forming contiguous vertical elevator rail(s) parallel to the elevator transport axis. The elevator platform can be transported along the mast stack via the vertical elevator rail. The base structure has a module receiving station which receives from a rail segment module source each rail segment module in turn, and feeds each one to the rail segment stacking system, allowing on-site coupling and bottom-to-top stacking of the fed rail segment modules, providing a progressively elongating mast stack, and transporting the progressively elongating mast stack vertically and progressively further away from the ground after each rail segment module is stacked thereto.

Elevator System, Kit and Method

TECHNOLOGICAL FIELD

The presently disclosed subject matter relates to elevator systems that are positioned externally with respect to a building structure.

BACKGROUND

Access to a tall building from the outside of the building is sometimes necessary, for example for evacuation of the building in emergencies such as for example when the building is on fire. While access up to 64 meters height of buildings can be reached using conventional means such as for example fireman's ladders, external access to parts of the building higher than this is not conventionally possible without the use of an external lift or similar transportation device, already present and affixed to the outside of the building.

By way of non-limiting example, US 4,018,306 discloses an emergency building access apparatus permitting ready access to a multi-story building on fire and rapid evacuation of occupants from a choice of multiple of emergency exits on each floor via vertical railroads attached to outside walls of the building each coupled, for the emergency, to its mobile unit having a railcar, its own power source, a drive mechanism, and controls.

Also by way of non-limiting example, US 4,664,226 discloses an escape system for buildings which is comprised of at least one vertically disposed runner positioned preferably on the exterior of a building adapted to engage and support a removable power driven platform carriage which moves from floor to floor receiving trapped persons and delivering the same to safety levels. The driving power can be mechanical, electrical, manual, or combinations of thereof.

Also by way of non-limiting example, US 2016/362284 discloses a mobile lifting apparatus for raising and lowering one or more persons that may include a bottom tower section having a first bottom sidewall and an opposing second bottom sidewall. The

apparatus may also have a top tower section coupled to and vertically translatable relative to the bottom tower section and a work platform translatable with the top carriage. The work platform may have a work surface with a first surface portion that is sized to accommodate at least one person standing on the first surface portion. An elevating assembly may be operable raise and lower the top tower section relative to the bottom tower section. The top tower section may be translatable to a lowered position in which the top carriage and the first surface portion are disposed laterally between the first and second bottom sidewalls.

Also by way of non-limiting example, GB 2,099,789 discloses one or more guide rails with a rack are permanently secured to the building, to assist in for evacuating a high rise building and fighting fires. A separable platform can be offered up to the guide rail 10 at its lower end and has a drive unit driving a pinion so as to be capable of climbing up and down the guide rail.

Also by way of non-limiting example, WO 94/05587 discloses a platform lift with a platform mounted on at least one upright so that it can be displaced vertically. The upright is made up of elements fitted one on top of the other. The platform is connected to the upright by a driven slide. In order to increase the range of applications of the platform lift, the lift is fitted with more uprights than slides and the slides and/or uprights have a coupling device designed to enable the platform to be selectively connected to different uprights.

GENERAL DESCRIPTION

According to a first aspect of the presently disclosed subject matter, there is provided a kit for providing an elevator system defining an elevator transport axis with respect to an exposed vertical face of a vertical structure, the kit comprising an elevator platform, a plurality of rail segment modules, a base structure and a rail segment stacking system, wherein:

the rail segment modules each comprises a respective one or more elevator rail elements, and the rail segment modules are configured for being serially stacked

contiguously with respect to one another via the rail segment stacking system to thereby provide a correspondingly progressively elongating mast stack wherein the respective said elevator rail elements are mutually aligned to form at least one contiguous vertical elevator rail parallel to the elevator transport axis, the rail segment modules being further configured for being in selectively secured engagement with respect to the vertical face in operation of the elevator system;

the elevator platform is configured for being selectively transported along the mast stack parallel to the elevator transport axis via the at least one contiguous vertical elevator rail, in operation of the elevator system;

the base structure is configured for being anchored with respect to a ground zone proximal to the vertical face, and having a module receiving station configured for selectively receiving each said rail segment module in turn from a rail segment module source, and for feeding in turn each received said rail segment module to the rail segment stacking system;

the rail segment stacking system is configured for on-site coupling and bottom-to-top stacking of the rail segment modules fed thereto from the module receiving station to thereby provide the progressively elongating mast stack, and for selectively transporting the progressively elongating mast stack vertically and progressively further away from the ground zone after each said rail segment module is coupled and stacked thereto.

Thus, according to this aspect of the presently disclosed subject matter there is provided a kit that provides an elevator system defining an elevator transport axis with respect to an exposed vertical face of a vertical structure. The kit includes an elevator platform, rail segment modules having elevator rail element(s), a base structure and a rail segment stacking system. The rail segment modules can be serially stacked contiguously via the rail segment stacking system to provide a mast stack, forming contiguous vertical elevator rail(s) parallel to the elevator transport axis. The elevator platform can be transported along the mast stack via the vertical elevator rail. The base structure has a module receiving station which receives from a rail segment module source each rail segment module in turn, and feeds each one to the rail segment stacking system, allowing on-site coupling and bottom-to-top stacking of the fed rail segment modules, providing a progressively elongating mast stack, and transporting the progressively elongating mast

stack vertically and progressively further away from the ground after each rail segment module is stacked thereto.

For example, the rail segment stacking system configured:

- for transporting a first said rail segment module away from the module receiving station thereby enabling a further said rail segment module to be received by the module receiving station from the rail segment module source;
- for enabling successive said rail segment module fed thereto from the module receiving station to be coupled in turn to the currently last-transported said rail segment module to thereby sequentially stack in a bottom-to-top direction successive said rail segment modules fed from the module receiving station to form the progressively elongating mast stack, the mast stack having a progressively increasing vertical dimension correlated to the number of said rail segment modules stacked in the mast stack, and
- for transporting the mast stack including the just-coupled rail segment module away from the module receiving station thereby enabling a further said rail segment module to be received by the module receiving station.

Additionally or alternatively, for example, the rail segment stacking system comprises a frame support configured for enabling each said rail segment module to be fed therethrough from the module receiving station, and a drive system configured for progressively transporting the progressively elongating mast stack through the frame support in operation of the system.

In at least some examples, the drive system comprises a rack and pinion arrangement in cooperation with the rail segment modules, the drive system further comprises a motor drive system operatively coupled to the rack and pinion system, the rack and pinion arrangement comprising a first plurality of rack elements and a second plurality of pinions, wherein the rack elements are provided in the rail segment modules and the pinions are provided in the frame support. For example, the pinions are rotatably mounted with respect to the frame support and operatively coupled to the motor drive system. Additionally or alternatively, for example, each said rail segment module comprises at least one said rack element corresponding to each said pinion, the at least one said rack element being provided in respective said elevator rail elements such that

when the rail segment modules are coupled and stacked in said mast stack the respective said rack elements corresponding to each said pinion are mutually aligned to provide the corresponding said at least one contiguous rack member, thereby enabling the mast stack to be translated in a linear direction responsive to the pinions being turned by the motor drive system.

In at least some other examples, the drive system comprises a rack and pinion arrangement in cooperation with the rail segment modules, the rack and pinion arrangement comprising a first plurality of rack elements and a second plurality of pinions, wherein the rack elements are provided in the frame support and the pinions are provided in the rail segment modules.

In at least some examples, the rail segment modules each comprises a respective one or more guide rail elements, configured to be mutually aligned to form corresponding one or more contiguous guide rails when the rail segment modules are serially stacked contiguously with respect to one another in the progressively elongating mast stack, and wherein the rail segment stacking system comprises a plurality of alignment rollers configured for cooperating with the one or more contiguous guide rails to maintain the rail segment stacking system aligned with respect to the mast stack.

In at least some examples, the rail segment stacking system is integrated with the elevator platform. For example, each said contiguous vertical elevator rail, is provided by at least one said contiguous rack member. Additionally or alternatively, for example, the kit comprises a locking arrangement for selectively locking and unlocking the elevator platform with respect to the base structure, wherein in the respective locked configuration, the rail segment stacking system can be operated for stacking and transporting the rail segment modules to provide the mast stack, and wherein in the respective unlocked configuration, the rail segment stacking system is configured for causing the elevator platform to be selectively transported along the mast stack via the at least one contiguous elevator rail, in operation of the elevator system.

In at least some other examples, the rail segment stacking system is fixedly mounted to the base structure, and is independent of the elevator platform. For example, the elevator platform is independent structurally and operationally with respect to the rail segment stacking system.

Additionally or alternatively, for example, the rail segment modules are each configured for being deployed between a stored configuration and a stacking configuration, wherein in the stowed configuration each respective rail segment module has a compact form relative to the stacked configuration, and wherein in the stacked configuration, the respective rail segment module is capable of being stacked with other said rail segment modules to provide the mast stack. For example, in said stowed configuration, each respective said rail segment module is circumscribed by a first envelope enclosing a first volume, and wherein in said stacked configuration, each respective said rail segment module is circumscribed by a second envelope enclosing a second volume, and wherein said second volume is greater than said first volume.

Alternatively, for example, the rail segment modules are each configured having a fixed geometry capable of enabling the rail segment modules to be stacked with respect to one another to provide the mast stack.

Additionally or alternatively, for example, each said rail segment module comprises a first coupling arrangement at a first longitudinal end thereof, and a second coupling arrangement at a second longitudinal end thereof, wherein the first coupling arrangement of each said rail segment module is configured for coupling with a said second coupling arrangement of another said rail segment module, and wherein the second coupling arrangement of each said rail segment module is configured for coupling with a said first coupling arrangement of another said rail segment module.

In at least some examples, each said rail segment module comprises a plurality of structural members interconnected in load bearing relationship. For example, each said structural member is in the form of a respective strut extending along an axial length of the respective rail segment module. Additionally or alternatively, for example, each said rail segment module comprises at least three said structural members, wherein each said structural member is in the form of a respective strut having a strut upper end and a respective lower strut end. For example, each said rail segment module comprises a first coupling member at one rail segment module end, and a second coupling member at another rail segment module end, wherein each said first coupling member is configured for being selectively coupled with a respective said second coupling member of another said rail segment module, and wherein each said second coupling member is configured

for being selectively coupled with a respective said first coupling member of another said rail segment module.

In at least some examples, each rail segment module comprises a respective first said rack element fixedly mounted to a first said structural member, and a respective said second said rack element fixedly mounted to a second said structural member. For example, for each said rail segment the respective said first said structural member and the respective said second structural member are in fixed transversely spaced relationship. Additionally or alternatively, for example, each said rail segment module comprises at least a third said structural member laterally spaced from said first structural member and said second structural member by a segment lateral spacing. For example, for each said rail segment the respective said first said structural member and the respective said second structural members are movably mounted with respect to the respective said third structural member, and movable between an undeployed configuration and a deployed configuration, wherein in the undeployed configuration each respective rail segment module has a compact form relative to the deployed configuration, and wherein in the deployed configuration, the respective rail segment module is capable of being stacked with other said rail segment modules to provide the mast stack.

Additionally or alternatively, for example, the rail segment modules are configured for being in selectively secured engagement with respect to the vertical face via a plurality of lateral load bearing elements previously provided on the vertical face. For example, said lateral load bearing elements each comprises a load bearing end projecting laterally from the vertical face, and wherein each said rail segment module comprises at least one lateral load bearing rail element configured such that when the rail segment modules are coupled and stacked in said mast stack the respective said at least one lateral load bearing rail elements are mutually aligned to provide the corresponding said at least one contiguous lateral load bearing rail member, the least one contiguous lateral load bearing rail member being configured for enabling sliding engagement with the load bearing ends of the plurality of said lateral load bearing elements in a manner allowing relative translation between the at least one contiguous lateral load bearing rail member and the load bearing ends in a first degree of freedom while preventing free relative movement between the at least one contiguous lateral load bearing rail member and the load bearing ends in a second degree of freedom and in a third degree of freedom

orthogonal to the first degree of freedom, wherein the first degree of freedom is parallel to the elevator transport axis.

Additionally or alternatively, for example, the kit further comprises a dispenser module configured for selectively engaging a plurality of lateral load bearing elements with respect to the vertical face, concurrent with the mast stack being assembled via the elevator rail assembly structure. For example, said lateral load bearing elements each comprises a load bearing end configured for projecting laterally from the vertical face when the respective lateral load bearing element is engaged with respect to the vertical face, and an engaging end configured for being selectively engaged with respect to the vertical face when dispensed via the dispenser module. For example, the vertical face comprises a plurality of glass panels, and the respective engaging ends each correspondingly comprise a plurality of suction cups configured for engagement with the glass panels. Alternatively, for example, the vertical face comprises a plurality of ferrous metal structural elements, and the respective engaging ends each correspondingly comprises a plurality of magnetic elements configured for magnetic engagement with the ferrous metal structural elements. Alternatively, for example, the vertical face comprises a plurality of concrete or stone structural elements, and the respective engaging ends each correspondingly comprises a plurality of nails or screws configured for engagement with the concrete or stone structural elements. Additionally or alternatively, for example, the dispenser module is configured for serially dispensing the lateral load bearing elements into engaging relationship with respect to the vertical face. For example, the dispenser module comprises at least one dispenser magazine configured for accommodating a plurality of said lateral load bearing elements, and an applicator configured for selectively dispensing each said lateral load bearing element from said at least one magazine and for engaging the dispensed said lateral load bearing element with respect to the vertical face.

Additionally or alternatively, for example, each said rail segment module comprises at least one lateral load bearing rail element configured such that when the rail segment modules are coupled and stacked in said mast stack the respective said at least one lateral load bearing rail elements are mutually aligned to provide the corresponding said at least one contiguous lateral load bearing rail member, the least one contiguous lateral load bearing rail member being configured for enabling sliding engagement with the load bearing ends of the plurality of said lateral load bearing elements in a manner

allowing relative translation between the at least one contiguous lateral load bearing rail member and the load bearing ends in a first degree of freedom while preventing free relative movement between the at least one contiguous lateral load bearing rail member and the load bearing ends in a second degree of freedom and in a third degree of freedom orthogonal to the first degree of freedom, wherein the first degree of freedom is parallel to the elevator transport axis.

Additionally or alternatively, for example, said dispenser module is configured for being carried by a thereby modified said rail segment module. For example, said dispenser module is mounted atop a first said rail segment module.

Additionally or alternatively, for example, the kit further comprises a fire extinguishing system 800.

According to a second aspect of the presently disclosed subject matter there is provided a rail segment module, for use with a kit as defined herein with respect to the first aspect of the presently disclosed subject matter.

According to a third aspect of the presently disclosed subject matter there is provided an elevator platform for use with a kit as defined herein with respect to the first aspect of the presently disclosed subject matter.

According to a fourth aspect of the presently disclosed subject matter there is provided a base structure for use with a kit as defined herein with respect to the first aspect of the presently disclosed subject matter.

According to a fifth aspect of the presently disclosed subject matter there is provided a rail segment stacking system for use with a kit as defined herein with respect to the first aspect of the presently disclosed subject matter.

According to a sixth aspect of the presently disclosed subject matter there is provided an elevator system provided by a kit as defined herein with respect to the first aspect of the presently disclosed subject matter.

According to a seventh aspect of the presently disclosed subject matter there is provided an elevator rail assembly structure configured for on-site stacking of the rail segment modules to provide a progressively elongating mast stack, the elevator rail

assembly structure comprising a base structure and a rail segment stacking system, wherein:

the base structure is configured for being anchored with respect to a ground zone proximal to the vertical face, and having a module receiving station configured for selectively receiving each said rail segment module in turn from a rail segment module source, and for feeding in turn each received said rail segment module to the rail segment stacking system;

the rail segment stacking system is configured for on-site coupling and bottom-to-top stacking of the rail segment modules fed thereto from the module receiving station to thereby provide the progressively elongating mast stack, and for selectively transporting the progressively elongating mast stack vertically and progressively further away from the ground zone after each said rail segment module is coupled and stacked thereto.

For example, the rail segment stacking system is configured:

- for transporting a first said rail segment module away from the module receiving station thereby enabling a further said rail segment module to be received by the module receiving station from the rail segment module source;
- for enabling successive said rail segment module fed thereto from the module receiving station to be coupled in turn to the currently last-transported said rail segment module to thereby sequentially stack in a bottom-to-top direction successive said rail segment modules fed from the module receiving station to form the progressively elongating mast stack, the mast stack having a progressively increasing vertical dimension correlated to the number of said rail segment modules stacked in the mast stack, and
- for transporting the mast stack including the just-coupled rail segment module away from the module receiving station thereby enabling a further said rail segment module to be received by the module receiving station.

According to an eighth aspect of the presently disclosed subject matter there is provided a dispenser module configured for selectively engaging a plurality of lateral load bearing elements with respect to a vertical face, concurrent with a mast stack being assembled via an elevator rail assembly structure. For example, said lateral load bearing

elements each comprises a load bearing end configured for projecting laterally from the vertical face when the respective lateral load bearing element is engaged with respect to the vertical face, and an engaging end configured for being selectively engaged with respect to the vertical face when dispensed via the dispenser module. For example, the vertical face comprises a plurality of glass panels, and the respective engaging ends each correspondingly comprise a plurality of suction cups configured for engagement with the glass panels. Alternatively, for example, the vertical face comprises a plurality of ferrous metal structural elements, and the respective engaging ends each correspondingly comprises a plurality of magnetic elements configured for magnetic engagement with the ferrous metal structural elements. Alternatively, for example, the vertical face comprises a plurality of concrete or stone structural elements, and the respective engaging ends each correspondingly comprises a plurality of nails or screws configured for engagement with the concrete or stone structural elements. Additionally or alternatively, for example, the dispenser module is configured for serially dispensing the lateral load bearing elements into engaging relationship with respect to the vertical face. For example, the dispenser module comprises at least one dispenser magazine configured for accommodating a plurality of said lateral load bearing elements, and an applicator configured for selectively dispensing each said lateral load bearing element from said at least one magazine and for engaging the dispensed said lateral load bearing element with respect to the vertical face.

According to a ninth aspect of the presently disclosed subject matter there is provided a method for providing an elevator system with respect to an exposed vertical face of a vertical structure, the method comprising:

(a) providing a kit as defined herein with respect to the first aspect of the presently disclosed subject matter;

(b) selectively inserting a first said rail segment module into the module receiving station, and causing the module receiving station to feed the first said rail segment module into the rail segment stacking system;

(c) selectively inserting a next said rail segment module into the module receiving station, and causing the module receiving station to feed the received said rail segment module into the rail segment stacking system, and concurrently coupling the just-fed said rail segment module to the currently last-transported said rail segment module to thereby sequentially stack in a bottom-to-top

direction successive said rail segment modules fed from the module receiving station to form the mast stack;

(d) transporting the mast stack including the just-coupled said rail segment module away from the module receiving station thereby enabling a further said rail segment module to be received by the module receiving station;

(e) securing the just-coupled said rail segment module to the vertical face;

(f) repeating steps (c), (d) and (e) until in step (c) a final said rail segment module is inserted into the module receiving station.

For example, the method further comprises the step:

(g) applying steps (d) and (e) to the final said rail segment module inserted into the module receiving station in step (c).

For example, the method further comprises the step:

(h) securing the final said rail segment module to the ground zone.

For example, the method further comprises the step:

(i) removing the base structure from the ground zone.

Additionally or alternatively, For example, the method further comprises the step:

(j) mounting the elevator platform to the mast stack, and selectively operating the elevator system to cause the elevator platform to be vertically transported along the vertical mast stack via the at least one contiguous vertical elevator rail.

Additionally or alternatively, For example, the method further comprises the step:

(k) wherein the rail segment stacking system is mounted to the elevator platform to the mast stack, and selectively operating the elevator system to cause the elevator platform to be vertically transported along the vertical mast stack via the at least one contiguous vertical elevator rail.

BRIEF DESCRIPTION OF THE DRAWINGS

In order to better understand the subject matter that is disclosed herein and to exemplify how it may be carried out in practice, examples will now be described, by way of non-limiting example only, with reference to the accompanying drawings, in which:

Fig. 1 is a perspective view of elements of a kit according to a first example of the presently disclosed subject matter.

Fig. 2 is a perspective view of an example of an elevator system assembled from the kit of the example of Fig. 1.

Fig. 3 is a perspective view of an example of a rail segment module comprised in the kit of the example of Fig. 1.

Fig. 4(a) is a side view of the example of Fig. 3, in deployed configuration; **Fig. 4(b)** is a side view of the example of Fig. 3, intermediate between an undeployed configuration and a deployed configuration; **Fig. 4(c)** is a side view of the example of Fig. 3, in undeployed configuration.

Fig. 5(a) is a bottom view of the example of Fig. 3, in deployed configuration; **Fig. 5(b)** is a top view of the example of Fig. 3, in deployed configuration.

Fig. 6(a) is a front partial view of two rail segment modules according to the example of Fig. 3, in close axial proximity to one another; **Fig. 6(b)** is a front partial view of the example of Fig. 6(a), in which the two rail segment modules are engaged to one another.

Fig. 7 is a perspective view of an example of a support structure comprised in the kit of the example of Fig. 1.

Fig. 8(a) is a perspective view of the example of Fig. 7, in compact configuration; **Fig. 8(b)** is a perspective view of the example of Fig. 7 in operational configuration and with a rail segment module received in the module receiving station; **Fig. 8(c)** is a perspective view of the example of Fig. 7, in operational configuration, and in which the trolley base has been moved in an upward direction to a feeding position.

Fig. 9(a) is a front view of the example of Fig. 7, in compact configuration; **Fig. 9(b)** is a front view of the example of Fig. 7 in operational configuration and with a rail segment module received in the module receiving station; **Fig. 9(c)** is a front view of the example of Fig. 7, in operational configuration, and in which the trolley base has been moved in an upward direction to a feeding position.

Fig. 10 is a perspective view of an example of an elevator platform comprised in the kit of the example of Fig. 1.

Fig. 11 is a perspective view of an example of a rail segment stacking system comprised in the kit of the example of Fig. 1; **Fig. 11(a)** is a perspective detail partial view of the example of Fig. 11.

Fig. 12 is a top view of the example of Fig. 11.

Fig. 13 is a front partial view of the example of Fig. 11.

Fig. 14 is a perspective view of an example of a dispenser module optionally comprised in the kit of the example of Fig. 1, in engaged relationship with a rail segment module.

Fig. 15 is a back perspective view of the dispenser module example of Fig. 14.

Fig. 16 is a side cross-sectional view of the dispenser module example of Fig. 14.

Fig. 17 is a front perspective view of the dispenser module example of Fig. 14, in which the housing has been removed.

Fig. 18 is a perspective view of an example of a lateral load bearing element configured for being dispensed by the dispenser module example of Fig. 14.

Fig. 19(a) is a front perspective view of another example of a lateral load bearing element configured for being dispensed by the dispenser module example of Fig. 14; **Fig. 19(b)** is a back perspective view of the example of Fig. 19(a); **Fig. 19(c)** is a cross-sectional view of the example of Fig. 19(a).

Fig. 20(a) is a back perspective partial view of the dispenser module example of Fig. 14 carrying a plurality of lateral load bearing elements of the example of Fig. 19(a), in which the respective applicators are aligned with particular lateral load bearing element that is currently residing at the dispensing station; **Fig. 20(b)** is a back perspective partial view of Fig. 20(a), in which the applicators operate to push the respective lateral load bearing element into abutting contact with a respective glass panel of the vertical face; **Fig. 20(c)** is a back perspective partial view of Fig. 20(a), in which the applicators further operate to press the respective lateral load bearing element onto the glass panels to ensure adhesion therebetween; **Fig. 20(d)** is a back perspective partial view of Fig. 20(a), in which the dispenser module is upwardly displaced away from the dispensed lateral load bearing element, allowing another lateral load bearing element to be received in the dispensing station.

Fig. 21(a) is a back perspective partial view of the dispenser module example of Fig. 14 carrying a plurality of lateral load bearing elements of the example of Fig. 18, in which the respective applicators are aligned with the particular lateral load bearing element that is currently residing at the dispensing station; **Fig. 21(b)** is a back perspective partial view of Fig. 21(a), in which the applicators operate to engage the bolts or screws with respect to the vertical face via the lateral load bearing element residing at the dispensing station; **Fig. 21(c)** is a back perspective partial view of Fig. 21(a), in which the applicators further operate to press the lateral load bearing element into full load bearing abutment with respect to the vertical face; **Fig. 21(d)** is a back perspective partial view of Fig. 21(a), in which the dispenser module is upwardly displaced away from the dispensed lateral load bearing element, allowing another lateral load bearing element to be received in the dispensing station.

Fig. 22(a) schematically illustrates in side view a first step in the assembly of the example of the elevator system example of Fig. 2 from the kit example of Fig. 1, in which the kit is transported to the desired ground zone; **Fig. 22(b)** schematically illustrates in side view another step in the assembly example of Fig. 22(a), in which the support structure is delivered to the ground zone; **Fig. 22(c)** schematically illustrates in side view another step in the assembly example of Fig. 22(a), in which the support structure is deployed and anchored to the ground zone; **Fig. 22(d)** schematically illustrates in side view another step in the assembly example of Fig. 22(a), in which a first rail segment module is being delivered to the support structure; **Fig. 22(e)** schematically illustrates in side view another step in the assembly example of Fig. 22(a), in which a first rail segment module has been transported by the rail segment stacking system, and another rail segment module is ready for being received by the support structure.

Fig. 23(a) schematically illustrates in front view a step in the assembly of the example of the elevator system example of Fig. 2 from the kit example of Fig. 1, in which the support structure is deployed and anchored to the ground zone, and a first rail segment module has been inserted therein; **Fig. 23(b)** schematically illustrates in side view another step in the assembly example of Fig. 23(a), in which a first rail segment module has been transported by the rail segment stacking system; **Fig. 23(c)** schematically illustrates in side view another step in the assembly example of Fig. 23(a), in which another rail segment module has been received in the support structure; **Fig. 23(d)** schematically illustrates in side view another step in the assembly example of Fig. 23(a), in which the

mast stack has reached a desired height via transport through the rail segment stacking system; **Fig. 23(e)** schematically illustrates in side view operation of the assembly example of Fig. 23(a), in which the elevator platform moves vertically with respect to the mast stack.

DETAILED DESCRIPTION

Referring to Figs. 1 and 2, a kit according to a first example of the presently disclosed subject matter, generally designated **100,** comprises an elevator platform **200,** a plurality of rail segment modules **500,** a base structure **300** and a rail segment stacking system **400.** As will become clearer herein, the kit **100** is configured for providing an elevator system **900** defining an elevator transport axis **EA** with respect to an exposed vertical face **VF** of a vertical structure **VS**.

The elevator transport axis **EA**, also interchangeably referred to herein as the elevator axis, is defined as the axis along which the elevator platform **200** is transported in operation of the elevator system **900,** the elevator platform **200** being typically reciprocably transportable along the elevator axis **EA**.

Also as will become clearer herein, such an elevator system **900** can be assembled in-situ from the kit **100** adjacent any suitable vertical structure **VS**, and in a relatively short time, and can be operated for a variety of uses. Such uses can include, for example, one or more of: fire extinguishing and/or rescue from tall buildings and the like; access to external parts of tall buildings, pylons and other structures; delivery of articles to a location (for example an apartment) in a building via an external window or other opening wherein such articles cannot be delivered via the inside of the building to the apartment. The vertical structure is not limited to buildings, and can include other types of structures, for example dams, walls, pylons and so on.

Also as will become clearer herein, such an elevator system **900** can be configured for being assembled in-situ from the kit **100** in secured engagement with respect to the vertical face **VF** in operation of the elevator system **900,** in which no special modifications

need to be made to the respective vertical structure **VS** prior to assembly of the elevator system **900**.

Also as will become clearer herein, such an elevator system **900** can be configured for being assembled in-situ from the kit **100** in secured engagement with respect to the vertical face **VF** in operation of the elevator system **900,** such that lateral loads and/or transverse loads on the elevator system **900** can be supported by the vertical structure **VS** via the vertical face **VF**. Furthermore, the elevator system **900** can be adapted for use with a variety of different types of vertical structure **VS**, for example building structures having an external facia or structure made from one or more of concrete, stone, wood, glass or metal, such an external facia or structure defining the vertical face **VF**.

Also as will become clearer herein, such an elevator system **900** can be configured, at least in some examples, for being selectively disassembled and removed from the vertical structure **VS**, for example when no longer needed.

Also as will become clearer herein, in at least some examples, such a kit **100** can be transported to the required site of the vertical structure **VS** when needed, for example via a truck or the like.

Referring to Fig. 2 and Fig. 3, and as will become clearer herein, the rail segment modules **500** each comprises a respective one or more elevator rail elements **520,** and the rail segment modules **500** are configured for being serially stacked contiguously with respect to one another via the rail segment stacking system **400** to thereby provide a correspondingly progressively elongating mast stack **600,** wherein the respective elevator rail elements **520** are mutually aligned to form at least one contiguous vertical elevator rail **620** parallel to the elevator transport axis **EA**.

It is to be noted that the kit **100** can include any desired number of rail segment modules **500.** In general, the number **N** of rail segment modules **500** used for providing a particular implementation of the elevator system **900** will depend on the effective longitudinal module dimension **LS** of each rail segment module **500** in a direction parallel to the elevator axis **EA** and on the height above the ground zone **GZ** that it is desired for the elevator platform **200** to reach using the elevator system **900,** i.e., during regular operation of the elevator system **900.**

Each rail segment module **500** has a respective longitudinal module axis **MA**, and the plurality of rail segment modules **500** are configured to be serially stacked in a typically vertical direction such that the respective longitudinal module axes **MA** are parallel and aligned with the elevator axis **EA**, to provide the mast stack **600**.

It is to be noted that the terms "vertical", "vertically" and so on, while typically relating to an axis that is aligned or parallel with the gravitational direction, in at least some examples this term can also include an axis that is inclined with respect to the gravitational direction at an inclination angle less than 90°, typically at an acute inclination angle. In at least the illustrated example, such an inclination angle can be for example in any one of the following range: ±20°; ±15°; ±10°; ±5°; ±2°; ±1°; or less than ±10°.

In at least the illustrated example, the rail segment modules **500** are nominally identical to one another, and thus can be serially stacked in any order, though as will become clearer herein the rail segment modules **500** are stacked in a bottom-to-top manner to provide the mast stack **600.**

By "bottom-to-top" stacking is meant that each additional rail segment module **500** is mounted to the bottom of the mast stack **600,** which after such addition increases the axial length of the mast stack **600**, and, as will become clearer herein, such a "progressively elongating" mast stack **600** is moved in "bottom-to-top" upward manner to allow each additional rail segment module **500** to be inserted and affixed to the bottom end of the current mast stack **600** to thereby increase the axial length of the mast stack **600.**

Each rail segment module **500** is configured for supporting respective static as well as dynamic mechanical loads relating to the elevator system **900** and operation thereof, in particular along the elevator axis **EA**. For example, such static forces can include the weight of all components of the system **900** above the respective rail segment module **500**, including all the other rail segment module **500** in the mast stack **600** above the respective rail segment module, and also including the elevator platform **200** and any payload transported by the elevator platform **200**. For example, such dynamic forces can include dynamic forces arising due to the movement of the elevator platform **200** during transportation thereof along the elevator axis **EA**, and/or due to the stacking of the rail segment modules **500** to form the mast stack **600,** and/or transportation of the mast stack **600** during assembly of the system **900,** and/or wind-induced loads. Thus, each rail segment module **500** can be made from any

suitable load bearing materials, including for example any one of steel, aluminium, carbon fiber composites, and so on.

According to an aspect of the presently disclosed subject matter, and as will become clearer herein, the rail segment modules **500** are also configured for being in selectively secured engagement with respect to the vertical face **VF** in operation of the elevator system **900,** and this secured engagement enables mechanical loads in a lateral direction **LD** and/or in a transverse direction **TD** to be supported during assembly as well as during operation of the elevator system **900.**

The aforesaid lateral direction **LD** and transverse direction **TD** are orthogonal to one another, and both the lateral direction **LD** and transverse direction **TD** can be defined as also orthogonal to the elevator axis **EA** or to the gravitational direction. For example the aforesaid lateral direction **LD** can be orthogonal to the vertical face **VF** and generally horizontal, while the transverse direction **TD** can be parallel to the vertical face **VF** and generally horizontal.

Referring again to Fig. 3, each rail segment module **500** has an effective longitudinal module dimension **LS** in a direction parallel to the elevator axis **EA**, such that when a plurality of **N** rail segment modules **500** are stacked with respect to one another, the resulting mast stack **600** has an effective longitudinal mast dimension **MS** given by the product **N*LS**.

In at least this example, each rail segment module **500** comprises a plurality of structural members **510** interconnected in load bearing relationship. The structural members **510** are configured for, *inter alia*, providing structural integrity and for enabling the aforesaid mechanical loads to be supported.

In at least this example, the plurality of structural members **510** includes a first structural member **510,** specifically denoted with reference numeral **510A**, a second structural member **510,** specifically denoted with reference numeral **510B**, and a third structural member **510,** specifically denoted with reference numeral **510C**, in which the three structural members **510A**, **510B**, **510C** are interconnected in a load bearing manner. It is to be noted that in alternative variations of this example, the plurality of structural members can include any suitable number of structural members **510** according to the specific implementation of the elevator system **900,** for example; in such cases the plurality of

structural members can include for example a single structural member, or two structural members or more than three structural members.

In at least this example, each rail segment module **500** has a braced frame construction, in which the three structural members **510A**, **510B**, **510C** are in the form of respective load bearing struts or columns, each extending along an axial length of the respective rail segment module **500,** i.e., along the effective longitudinal module dimension **LS**.

The first structural member **510A**, in at least this example in the form of a column or strut, has a respective strut upper end **511A** and a respective strut lower end **513A**, at opposed longitudinal ends of the rail segment module **500.**

The second structural member **510B**, in at least this example in the form of a column of strut, has a respective strut upper end **511B** and a respective strut lower end **513B**, at opposed longitudinal ends of the rail segment module **500.**

The third structural member **510C**, in at least this example in the form of a column of strut, has a respective strut upper end **511C** and a respective strut lower end **513C**, at opposed longitudinal ends of the rail segment module **500.**

In at least this example, the first structural members **510A** and the second structural member **510B** support the main loads along the elevator axis **EA**, and are interconnected via a plurality of horizontal beams **512** via rigid joints to form a rail guide support assembly **515.** Thus, in at least this example, the first lateral member **510A** is transversely spaced with respect to the second structural member **510B** by a respective fixed transverse spacing **TS1** (Fig. 5(a)). In alternative variations of this example, the two structural members **510A**, **510B** can be further braced, for example via one or more of cross braces, V braces, inverted V braces, diagonal braces or eccentric braces.

As will become clearer herein, the one or more elevator rail elements **520** are fixed to and supported by rail guide support assembly **515.**

In at least this example, the third structural member **510C** is laterally spaced from the first structural member **510A** and from the second structural member **510B** by a segment lateral spacing **SL1** (Fig. 5(a)).

The third structural member **510C** is connected to the rail guide support assembly **515** via cross-struts **518,** such that at least in operation of the elevator system the three structural members **510A**, **510B**, **510C** are nominally parallel to one another, and laterally and transversely spaced with respect to one another in triangular spaced relationship, as best seen in Figs. 5(a) and 5(b).

In at least this example, and referring to Figs. 4(a), 4(b) and 4(c), the rail segment modules **500** each have a deployable configuration, i.e., each segment module **500** is configured for being (optionally reversibly) deployed between a respective undeployed configuration (also referred to interchangeably herein as a stored configuration) **UC**, illustrated in Fig. 4(c), and a respective deployed configuration (also referred to interchangeably herein as a stacking configuration) **DC**, illustrated in Fig. 4(a). Fig. 4(b) illustrates an intermediate position between the undeployed configuration **UC** and the deployed configuration **DC**. This deployment feature can enable less storage space to be required for storing and transporting the rail segment modules **500**, for example.

However, in at least some alternative variations of this example, the respective rail segment modules are each configured having a fixed geometry, for example corresponding to the geometry of the aforesaid deployed configuration **DC**, capable of enabling the respective rail segment modules to be stacked with respect to one another to provide the respective mast stack. At least in some cases, this feature can lead to lower manufacturing costs and/or lower maintenance costs, as compared with a corresponding deployable configuration, for example.

Referring again to Fig. 4(c), in the undeployed configuration **UC** each respective rail segment module **500** has a compact form relative to the deployed configuration, for example in which the segment lateral spacing is at a minimum. In the deployed configuration **DC**, the respective rail segment module **500** has an expanded load-bearing form, in which segment lateral spacing conforms to segment lateral spacing **SL1.** In the deployed configuration **DC**, the respective rail segment module **500** is capable of being stacked with other said rail segment modules **500** to provide the mast stack **600.**

Referring again to Figs. 4(a) and 4(c), in the undeployed configuration **UC**, each respective rail segment module **500** is circumscribed by a first envelope **EV1** enclosing a first volume **V1,** whereas in the deployed configuration, each respective rail segment module

500 is circumscribed by a second envelope **EV2** enclosing a second volume **V2**. The second volume **V2** is greater than the first volume **V1**.

In at least this example, and referring again also to Fig. 4(b), each rail segment module **500** can transit between the deployed configuration **DC** and the undeployed configuration **UC** via a pivoting operation. In each rail segment module **500,** the respective rail guide support assembly **515** is movably mounted with respect to the respective third structural member **510C** in a parallelogram manner via the cross-struts **518.** In other words, the cross-struts **518** are each pivotably mounted at one end thereof to the respective rail guide support assembly **515** via one set of hinges (not shown), and at the other end thereof to the respective third structural member **510C** via another set of hinges **516.**

In at least this example, and referring in particular to Figs. 3, 4(a), 5(a) and 5(b), each rail segment module **500** comprises end plates including an upper end plate **522** and a lower end plate **524** at longitudinally opposed upper end **511** and lower end **513** of the respective rail segment module **500.** The end plates **522, 524** are each pivotably mounted at one end thereof to the respective rail guide support assembly **515,** and at the other end thereof to the respective third structural member **510C**, and pivot in the same manner as the cross-struts **518,** together enabling the respective rail segment module **500** to transit between the deployed configuration **DC** and the undeployed configuration **UC**. In the deployed configuration, the end plates **522, 524** are load bearing with respect to the respective rail guide support assembly **515** and the respective third structural member **510C**.

For each rail segment module **500,** concurrent pivoting of the cross-struts **518** and end plates **522, 524** in one direction results in the respective rail guide support assembly **515** being laterally spaced from the respective third structural member **510C** by segment lateral spacing **SL1** to thereby provide the deployed configuration **DC**. Pivoting of the cross-struts **518** in the opposite direction results in the respective rail guide support assembly **515** being brought laterally closer to the respective third structural member **510C** to thereby provide the undeployed configuration **UC**.

Referring also to Figs. 6(a) and 6(b), each said rail segment module **500** comprises a first coupling arrangement **540** at a first longitudinal end **511** of the respective rail segment module **500,** and a second coupling arrangement **560** at a second longitudinal end **513** of the respective rail segment module **500.**

The first coupling arrangement **540** of each rail segment module **500** is configured for coupling with a second coupling arrangement **560** of another rail segment module **510.** Similarly, the second coupling arrangement **560** of each rail segment module **500** is configured for coupling with a first coupling arrangement of another rail segment module **500.**

The first coupling arrangement and the second coupling arrangement can take any suitable form that enables the first coupling arrangement of one rail segment module to be reversibly or irreversibly coupled to the second coupling arrangement of another rail segment module, and thus many different varieties of such coupling arrangements can be used. For example, the first coupling arrangement and the second coupling arrangement can be in the form of nuts and bolts that enable the adjacent rail segment modules to be coupled to one another, or can be in the form of mechanical latches, or can be in the form of welds or in any other suitable form.

In at least this example, the first coupling arrangement **540** is in the form of a plurality of male elements **543,** that are affixed to and face away from the first end plate **522,** whereas the second coupling arrangement **560** is in the form of a corresponding plurality of female elements **546,** that are affixed to and face away from the second end plate **524.** While in the illustrated example, each rail segment module **500** is shown as including three male elements **543** and three female elements **546,** in at least some alternative variations of this example each rail segment module **500** can include more than three or less than three male elements **543,** and correspondingly more than three or less than three female elements **546.** In yet other alternative variations of this example, the first coupling arrangement **540** and the second coupling arrangement **560** can include alternative coupling arrangements.

In yet other alternative variations of this example two of the male elements **543** or pins are mounted directly to the respective rail guide support assembly **515,** and the third male element **543** or pin is mounted directly to the respective third structural member **510C**, at one longitudinal end of each rail segment module **500.** Correspondingly, two of the female elements **546** or cups are mounted to the respective rail guide support assembly **515,** and the third female element **546** or cup is mounted to the respective third structural member **510C**, at the other longitudinal end of each rail segment module **500.**

In at least this example, each male element **543** is in the form of a pin, and each female element **546** is in the form of a cup having a recess configured for receiving a respective pin in a load bearing manner.

For example, each respective recess can have an internal profile that is complementary to the external profile of a respective pin, such that when such a pin is received by a respective cup, the two are coupled together tightly.

In implementations of the elevator system **900** in which for example it is intended for the elevator system to remain permanently in place, such an engagement between the pins and cups can be via an interference fit or other friction fit, for example.

In other alternative implementations of the elevator system **900** in which for example it is desired to have the option of dismantling or disassembling the elevator system **900** from the vertical structure **VS**, the coupling between the pins and respective cups is reversible. For example, the respective coupled pins and cups can be bolted together manually.

Alternatively for example, the respective pins and cups can be configured such that the coupling in a load bearing manner can be automatic, responsive to the respective pins being inserted into and received by the respective cups.

For example, a ball clutch mechanism can be provided in the cups and/or the pins, such that when coupled the respective balls maintain load bearing continuity between the two coupled rail segment modules **500;** to decouple, a predetermined threshold tensile force needs to be applied between the coupled rail segment modules **500,** and the elevator system can be adapted to provide such a force in an automatic manner during the disassembly process, for example.

In another example, a linear ratchet mechanism can be incorporated in the respective pins and cups, including at least one pawl in one of the pin and cup that operates to slide over a corresponding tooth or wedge element provided in the other one of the pin and cup, when the pin and cup are linearly brought together. However, the pawl locks with the tooth or wedge element when attempting to simply pull apart the pin and cup, and thus to enable decoupling between the pin and cup, the pawl needs to be rotated away from the tooth or wedge element, manually or in an automated manner.

In any case, and referring again to Figs. 6(a) and 6(b), the male elements **543** (for example in the form of the aforesaid pins), and the female elements **546** (for example in the form of the aforesaid cups) are located in the respective first end plate **522** and respective end plate **524** of each rail segment module **500,** such that when coupled with the corresponding female elements **546** and male elements **543** of adjacent rail segment modules, respectively, the corresponding first, second and third structural members **510A**, **510B**, **510C** of each rail segment module **500** of each pair of thus coupled adjacent modules are each at least aligned, and at least in this case also in at least abutting contact with first, second and third structural members **510A**, **510B**, **510C** of the adjacent rail segment module **500** of the pair.

In at least this example, and referring again to Fig. 2 and Fig. 3, the elevator system **900** optionally further comprises a fire extinguishing system **800,** and the rail segment modules **500** and corresponding mast stack **600** are correspondingly configured for enabling water or any other suitable fire extinguishing fluid, to be channeled thereby from one longitudinal end of the mast stack **600** to the other longitudinal end thereof and/or to one or more intermediate locations in the mast stack **600.**

In at least this example, and referring in particular to Fig. 3, Fig. 5(a) and Fig. 5(b), the first structural member **510A** and the second structural member **510B** comprise a respective first lumen **519A** and second lumen **519B**, respectively, which are part of the fire extinguishing system **800.**

The first lumen **519A** extends throughout the longitudinal length of the respective first structural member **510A**, and is open at the respective strut upper end **511A** and at the respective strut lower end **513A** thereof. Furthermore, the respective strut upper end **511A** of each said first structural member **510A** is configured for sealingly engaging with the respective strut lower end **513A** of an upwardly adjacently coupled rail segment module **500,** to maintain open fluid communication between the two respective lumens. Similarly, the respective strut lower end **513A** of each said first structural member **510A** is configured for sealingly engaging with the respective strut upper end **511A** of a downwardly adjacently coupled rail segment module **500,** to maintain open fluid communication between the two respective lumens.

Similarly, the second lumen **519B** extends throughout the longitudinal length of the respective second structural member **510B**, and is open at the respective strut upper end **511B** and at the respective strut lower end **513B** thereof. Furthermore, the respective strut upper end **511B** of each said second structural member **510B** is configured for sealingly engaging with the respective strut lower end **513B** of an upwardly adjacently coupled rail segment module **500,** to maintain open fluid communication between the two respective lumens. Similarly, the respective strut lower end **513B** of each said second structural member **510B** is configured for sealingly engaging with the respective strut upper end **511B** of a downwardly adjacently coupled rail segment module **500,** to maintain open fluid communication between the two respective lumens.

In this manner, a first continuous channel is provided by the serially engaged first lumens **519A**, and a second continuous channel is provided by the serially engaged second lumens **519B**.

In at least this example, and referring in particular to Fig. 3, the fire extinguishing system **800** further comprises at least one delivery pipe segment **530,** carried by the respective rail guide support assembly **515** of each respective rail segment module **500,** and interconnecting the respective first structural member **510A** and the respective second structural member **510B** thereof. The delivery pipe element **530** comprises an internal lumen, in open fluid communication with the respective first lumen **519A** and the respective the second lumen **519B** of the respective rail guide support assembly **515.** Each delivery pipe segment **530** comprises a port **535,** which can be selectively closed or opened, to respectively prevent or allow passage of water or other fluids therethrough from the internal lumen of the respective delivery pipe segment **530.**

Thus in at least one mode of operation of the elevator system **900,** the first continuous channel and/or the second continuous channel can be connected to a source of pressurized water, for example a fire hydrant, for example via coupling to a respective port **535** (for example corresponding to a rail segment module **500** at a bottom end of the mast stack **600**) to allow pressurized water to enter the first continuous channel, the second continuous channel and the delivery pipe elements **530** of the rail segment modules **500** of the mast stack **600.** Furthermore, a different one or more of the ports **535** corresponding to one or more selected rail segment modules **500** of the mast stack **600** (for example at the upper end

of the mast stack **600**) can be opened, to thereby allow pressurized water to be delivered to the vertical structure **VS** at heights corresponding to the one or more open ports **535.** Optionally, a hose pipe can be coupled to a port **535** to thereby enable pressurized water to be delivered via the hose pipe.

In at least an alternative variation of this example, only one of the first structural member **510A** and the second structural member **510B** comprises a respective first lumen **519A** or second lumen **519B**, while the other one of the first structural member **510A** and the second structural member **510B** does not include the respective lumen.

Referring to Fig. 7, the base structure **300** is configured for being anchored with respect to a ground zone **GZ** proximal to the vertical face **VF**, and comprises a module receiving station **350.**

The base structure **300** comprises a support frame **305** having an upper pedestal portion **320,** supported by a plurality of support legs **310** in vertical spaced relationship with the ground zone **GZ**. Each leg **310** comprises a foot or pad **315** that is configured for being in overlying contact with the ground zone **GZ**. The support legs **310** have a vertical dimension **VT1,** at least in operation of the elevator system **900,** that is sufficient such as to enable a rail segment module **500** to be laterally inserted into the module receiving station **350** from an outside of the base structure **300,** for example from a suitable rail segment module source, as will become clearer herein. In at least this example, a number of braces **360** can be provided to reinforce the frame structure **300.**

While in at least this example, the base structure **300** comprises four support legs **310**, in at least some alternative variations of this example the respective base structure can have fewer than four support legs, or more than four support legs, or any other suitable structure that can provide the aforesaid a vertical dimension **VT1**.

The pads **315** can be configured for anchoring the base structure **300** to the ground zone **GZ**, for example via bolts or the like. Additionally or alternatively, blocks of concrete or other heavy materials can be overlaid over parts of the base structure **300** to anchor the base structure **300** to the ground zone **GZ**.

In at least this example, and referring to Figs. 8(a), 8(b), 9(a) and 9(b), the base structure **300** has a deployable configuration, and is thus configured for being deployed

between a stowable or compact configuration **SC**, and an operational configuration **OC**. This stowability feature can enable less storage space to be required for storing and transporting the base structure **300,** for example.

Thus, in at least this example, the support legs **310** are not of fixed geometry, but rather have a telescopic configuration, enabling the support legs to reversibly extend vertically from the stowable configuration **SC** in which the support legs **310** have vertical dimension **VT2,** to the operational configuration **OC** in which the support legs **310** have vertical dimension **VT1,** larger than vertical dimension **VT2.**

However, in at least some alternative variations of this example, the respective base structure is configured having a fixed geometry, capable of enabling the rail segment modules to be inserted into the respective module receiving station **350.** At least in some cases, this feature can lead to lower manufacturing costs and/or maintenance costs, as compared with a corresponding deployable configuration, for example.

The upper pedestal portion **320** is configured for supporting the elevator platform **200** at least during assembly of the elevator system **900.**

Referring again to Fig. 7, the upper pedestal portion **320** further comprises a window **325** sized and shaped for enabling a rail segment module **500** that is residing in the module receiving station **350** to be fed through the window **325** and into the rail segment stacking system **400.** For example, the window **325** has a shape enveloping or generally similar to, and dimensions essentially just larger than, the shape and dimensions of a cross-section of the rail segment module **500.** In at least this example, the window **325**, and indeed the base structure **300**, is open on a lateral side thereof, in operation facing the vertical face **VF**. This enables the base structure **300** to be laterally removed from the anchored position once the elevator system **900** is assembled and engaged to the vertical face **VF**. This allows the base structure **300** to be used for assembling another elevator platform at another location. In alternative variations of this example, the base structure **300** can be configured for remaining on site so long as it is desired to use the elevator system **900**, and in such cases the window **325**, and indeed the base structure **300**, is not required to be open on a lateral side thereof.

Referring again to Figs. 7, 8(a), 8(b), 8(c), the module receiving station **350** is configured for selectively receiving each rail segment module **500** in turn from a rail

segment module source, and for feeding in turn each received rail segment module **500** to the rail segment stacking system **400.**

The module receiving station **350** thus comprises a lift trolley **340** having a trolley base **342** reciprocably movably mounted with respect to the support frame **305** via a powered lifting system **348.**

The trolley base **342** is configured for receiving and supporting each rail segment module **500** in turn, in a stackable orientation, i.e., in which the respective module axis **MA** is parallel and aligned with the elevator axis **EA**. For example, the trolley base **342** can include a flat surface having wells **341** corresponding in number and disposition to the second coupling arrangement **560,** and being complementarily shaped thereto, such that the second coupling arrangement **560** can be temporarily engaged in the wells **341** while the respective rail segment module **500** is held in place by the trolley base **342.**

The powered lifting system can include for example a plurality of jacks **347,** each anchored at one end thereof to the support frame **305** and having a movable piston element at the other end thereof mounted to the trolley base **342.** Referring in particular to Figs. 8(b), 8(c), 9(b) and 9(c), the jacks **347** are configured for selectively urging the trolley base **342** in an upward direction to a feeding position **FP**, or in a return downward direction to a module receiving position **RP**, defining a lift stroke **LS**, responsive to actuation of the jacks **347.** For example, the jacks **347** can be pneumatic jacks, hydraulic jacks, electrically actuated jacks, and so on.

The vertical dimension of the lift trolley **340** in the module receiving position **RP** can be just less than vertical dimension **VT1**.

Referring also to Fig. 10, the elevator platform **200** is configured for being selectively transported along the mast stack **600** parallel to the elevator transport axis **EA** via the at least one contiguous vertical elevator rail **620**, in operation of the elevator system **900**, as will become clearer herein.

The elevator platform **200** is also configured at least for receiving a payload (for example, at one end of the elevator axis **EA**), for carrying the payload while being transported along the mast stack **600**, and for delivering the payload at another location along the elevator axis (for example at the other end of the elevator axis **EA**).

The elevator platform **200** thus includes a payload zone **220** configured for holding or accommodating the payload thereat during operation of the elevator system **900.**

The elevator platform also comprises a platform window **230** sized and shaped for enabling the elevator platform **200** to engage with and be transported with respect to the mast stack **600** in operation of the elevator system **900.** For example, the platform window **230** has a shape enveloping or similar to, and dimensions essentially just larger than, the shape and dimensions of a longitudinal cross-section of the rail segment module **500.**

In at least this example, the platform window **230** overlies the support structure window **325** when the elevator platform **200** is sitting on the upper pedestal portion **320.**

In at least this example, the elevator platform **200** further comprises one or more drive units **290** configured for providing the motive force required for transporting the elevator platform **200** with respect to the mast stack **600** along the elevator axis **EA**. For example, the drive units **290** comprise one or more electrical motors, operatively coupled to an electrical power source (not shown). For example, such an electrical power source can be in the form of batteries carried on-board the elevator platform **200**. Alternatively, the electrical power source can be a generator carried on a mobile unit such as a truck, and suitable cables connect the elevator platform **200** to the electrical power source.

In at least this example, the drive units **290** are accommodated in the elevator platform **200**.

The shape, size and form of the elevator platform **200** can be designed to match a particular type of payload, for example for predetermined types of elevator operation, or can be one chosen from a variety of standard sizes/shapes/forms, for example each capable of being used for a variety of different elevator operations.

In the illustrated example, the elevator platform **200** is configured for carrying passengers and/or goods, and includes a peripheral guard rail **280.**

The elevator platform **200** can be configured for being operated manually, for example by a passenger while on the elevator platform **200**. Additionally or alternatively, the elevator platform **200** can be configured for being operated by remote control, for example by an operator on the ground. Such remote control can be via wireless

communication between a controller operated by the operator, and a receiver unit mounted to the elevator platform **200** and coupled to the drive units **290**, for example. Alternatively, such remote control can be via suitable wires between a controller operated by the operator, and a receiver unit mounted to the elevator platform **200** and coupled to the drive units **290**, for example.

Referring to Figs. 11, 11(a), 12, 13, the rail segment stacking system **400** is configured for on-site coupling and bottom-to-top stacking of the rail segment modules **500** that are fed to the rail segment stacking system **400** from the module receiving station **350,** to thereby provide the progressively elongating mast stack **600.** The rail segment stacking system **400** is also configured for selectively transporting the progressively elongating mast stack **600** upwardly and progressively further away from the rail segment stacking system **400,** and thus from the ground zone **GZ**, after each rail segment module **500** is coupled and stacked to the then-current mast stack **600** in the aforesaid bottom-to-top stacking.

As will become clearer herein, the rail segment stacking system **400** is configured for:

- transporting a first said rail segment module **500** upwardly away from the module receiving station **350** thereby enabling the next rail segment module **500** to be laterally received by the module receiving station **500,** for example from a rail segment module source;
- enabling successive rail segment modules **500** fed to the rail segment stacking system **400** from the module receiving station **350** to be coupled in turn to the currently last-transported rail segment module **500,** to thereby sequentially stack in a bottom-to-top direction successive rail segment modules **500** individually fed from the module receiving station **350,** to form the progressively elongating mast stack **600,** the mast stack **600** having a progressively increasing vertical dimension correlated to the number of rail segment modules **500** stacked in the mast stack **600,** and
- transporting the mast stack **600** including the just-coupled rail segment module **500** upwardly away from the module receiving station **350** thereby enabling a further rail segment module **500** to be received by the module receiving station **350.**

The rail segment stacking system **400** comprises a frame support **410** configured for enabling each rail segment module **500** to be fed therethrough from the module receiving station **350,** and a drive system **450** configured for supporting and progressively transporting the progressively elongating mast stack **600** through the frame support **410** in operation of the elevator system **900,** in particular during assembly of the elevator system **900** from the kit **100.**

In at least this example, the drive system **450** comprises a rack and pinion arrangement **700** in cooperation with the rail segment modules **500.** The drive system **450** comprises a motor drive system **420** coupled to the rack and pinion arrangement **700.** As will become clearer herein, in at least this example, the motor drive system **420** is the same as the drive units **290,** i.e., they are one and the same component, and the motor drive system **420** also operates as the drive units **290.** However, in alternative variations of this example, the motor drive system **420** are distinct components with respect to the drive units **290.**

The rack and pinion arrangement **700** comprises a first plurality of rack elements **710** and a second plurality of pinions **730,** coupled with one another such that during assembly of the elevator system **900** from the kit **100,** a rotational movement of respective pinions **730** results in a linear translation of respective rack elements **710.**

In at least this example, the rack elements **710** are provided in the rail segment modules **500,** and the pinions **730** are provided in the frame support **410.** The pinions **730** are rotatably mounted with respect to the frame support **410,** and operatively coupled to the motor drive system **420.** However, in at least some alternative variations of this example, the respective rack and pinion arrangement can instead comprise a first plurality of rack elements provided in the frame support, and a second plurality of pinions provided in the rail segment modules.

While in at least this example each rail segment module **500** comprises a pair of rack element **710,** in alternative variations of this example, each respective rail segment module can comprise one, or more than two respective rack elements.

Referring in particular to Fig. 12 and Fig. 13, for each rail segment module **500,** a respective first rack element **710,** also designated with reference numeral **710A**, is affixed

to the first structural member **510A**, and a respective second rack element **710,** also designated with reference numeral **710B**, is affixed to the second structural member **510B**, the rack elements **710** being parallel to one another and parallel to the elevator axis **EA**.

Referring also to Fig. 3, each rack element **710A**, **710B** extends longitudinally along the longitudinal length of the respective first structural member **510A** or second structural member **510B** (i.e., along the effective longitudinal module dimension **LS**), such that the ends **711, 713** of each rack element **710** are at the respective ends **511, 513,** respectively, of the respective rail segment module **500.** In at least this example, the rack elements **710A**, **710B**, in particular the teeth thereof, are facing mutually opposed transverse directions for each respective rail segment module **500.**

Referring also to Fig. 2, the rack elements **710** are positioned with respect to the rail segment modules **500** in a manner such that when the rail segment modules **500** are coupled and stacked in the mast stack **600,** the respective rack elements **710** corresponding to each said pinion **730** are mutually aligned to provide a corresponding contiguous rack member **750.** Thus in at least this example the mast stack **600** comprises a first contiguous rack member **750,** also designated with reference numeral **750A** and a second contiguous rack member **750,** also designated with reference numeral **750B**. The first contiguous rack member **750A** is formed by the adjacent respective first rack elements **710A** of the stacked rail segment modules **500,** and the second contiguous rack member **750B** is formed by the adjacent respective second rack elements **710B** of the stacked rail segment modules **500.**

Referring for example to Fig. 13, for each rail segment module **500,** each of the rack elements **710** thereof is associated with, and corresponds to, at least one pinion **730.** Thus, in at least this example, the rack and pinion arrangement **700** comprises at least one first pinion **730A** associated with all of the respective first rack elements **710A** of the rail segment modules **500,** and at least one second pinion **730B** associated with all of the respective second rack elements **710B** of the rail segment modules **500.**

In other words, in at least this example, the rack and pinion arrangement **700** comprises at least one first pinion **730A** associated with first contiguous rack member

750A, and at least one second pinion **730B** associated with second contiguous rack member **750B**.

In at least this example, the rack and pinion arrangement **700** comprises one first pinion **730A** and one second pinion **730B**, each being rotatably mounted to the frame support **410** about respective rotation axes parallel to the lateral direction. As best seen in Fig. 12, the first pinion **730A** and the second pinion **730B** are transversely spaced from one another such that when a rail segment module **500** is fed to the rail segment stacking system **400** from the module receiving station **350,** the first pinion **730A** is coupled with the respective first rack element **710A**, and concurrently the second pinion **730B** is coupled with the respective second rack element **710B**. This arrangement enables the mast stack **600** to be translated in a linear direction parallel to the elevator axis EA responsive to the pinions **730** being turned by the motor drive system **420.**

Furthermore, and referring again to Fig. 9(b) and Fig. 9(c), the first pinion **730A** and the second pinion **730B** are longitudinally positioned with respect to the base structure **300** above the module receiving station **350,** such that when a rail segment module **500** is received into the module receiving station **350,** and the lift trolley **340** is in the module receiving position **RP**, the upper end **511** of the received rail segment module **500** is not initially coupled with the first pinion **730A** and the second pinion **730B**. Referring also to Fig. 11, this enables the bottom end of the previously-fed rail segment module **500** to be projecting downwards towards the module receiving station **350,** and for the previously-fed rail segment module **500** to be still in coupled engagement with the first pinion **730A** and the second pinion **730B**. This arrangement further enables the rail segment module **500** currently residing in the module receiving station **350** to be translated to the feeding position **FP** concurrently coupling with the previously-fed rail segment module **500** (and thus concurrently coupling with the current mast stack **600)** in a bottom-to-top stacking manner, and subsequently displacing the updated mast stack **600** in an upwards direction such that the just-fed rail segment module **500** is coupled to the first pinion **730A** and the second pinion **730B** via the respective first rack element **710A** and the respective second rack element **710B** of the just-fed rail segment module **500**.

Referring in particular to Fig. 5(b), Fig. 12 and Fig. 13, the rail segment modules **500** each comprises a respective one or more guide rail elements **762,** configured to be

mutually aligned to form corresponding one or more contiguous guide rails **760** when the rail segment modules **500** are serially stacked contiguously with respect to one another in the progressively elongating mast stack **600.** Correspondingly, the rail segment stacking system **400** comprises a plurality of alignment rollers **490** configured for cooperating with the contiguous guide rails **760** to maintain the rail segment modules **500,** and thus the mast stack **600,** aligned with respect to the rail segment stacking system **400.**

In at least the illustrated example, one or more sets of alignment rollers **490** and corresponding contiguous guide rails **760** provide alignment in a transverse direction. Referring to Fig. 12, two such continuous guide rails **760,** also designated with reference numeral **760C**, are provided on opposite transverse sides of the third structural member **510C** of the rail segment modules **500** in the mast stack **600,** and cooperate with transverse alignment rollers **490C**. Similarly, two such continuous guide rails **760,** also designated with reference numeral **760A**, are provided on opposite transverse sides of the first structural members **510A** of the rail segment modules **500** in the mast stack **600,** and cooperate with lateral alignment rollers **490A**; additionally, two such continuous guide rails **760,** also designated with reference numeral **760B**, are provided on opposite transverse sides of the second structural members **510B** of the rail segment modules **500** in the mast stack **600,** and cooperate with lateral alignment rollers **490B**.

In at least this example, the rail segment stacking system **400** is integrated with the elevator platform **200.** In such an arrangement, the elevator platform **200** essentially carries out two functions – an assembly function and an elevator function.

In the assembly function, the platform **200,** in particular the rail segment stacking system **400** that is integrated into the platform **200,** is locked with respect to the base structure **300,** and is immobilized thereby. For this purpose, the kit **100,** in particular the platform **200** and/or the base structure **300** comprises a locking arrangement (not shown) for selectively locking and unlocking the elevator platform **200** with respect to the base structure **300.** In the respective locked configuration, the rail segment stacking system **400** can be operated according to the assembly function, for stacking and transporting the rail segment modules **500** to provide the progressively extending mast stack **600.** In the respective unlocked configuration, the rail segment stacking system **400** can be operated according to the elevator function, selectively causing the elevator platform **200** to be

selectively transported along the fully assembled mast stack **600** via the contiguous vertical elevator rails **620,** in operation of the elevator system **900.**

Thus, in at least this example, each contiguous vertical elevator rail **620** of the elevator system **900** is provided by, i.e., is constituted by, the corresponding first contiguous rack member **750A** and the second contiguous rack member **750B**, and thus the corresponding rack elements **710** of the rail segment modules **500** are provided by, i.e. are constituted by, the respective elevator rail elements **520.**

In at least this example, the motor drive system **420** provides the motive power for translating the elevator platform **200** along the elevator axis **EA**, and the elevator platform **200** moves along the elevator axis **EA** responsive to the motor drive system **420** turning the pinions **730A**, **730B** with respect to the first contiguous rack member **750A** and the second contiguous rack member **750B**, respectively, i.e., with respect to the respective contiguous vertical elevator rails **620.** Similarly, the contiguous guide rails **760** and associated rollers maintain the elevator platform **200** aligned with mast stack **600.**

It is to be noted that in at least some alternative variations of this example, the rail segment stacking system **400** is not integrated with the elevator platform **200,** and the rail segment stacking system **400** is independent from the elevator platform **200**, structurally and/or operationally**.** In such an arrangement, rail segment stacking system **400** can be permanently fixedly mounted to the base structure **300,** for example, and carries out the assembly function independent of the elevator platform **200,** while the elevator platform **200** carries out the elevator function. In such a case, and during assembly function, the respective platform **200** can be resting over the base structure **300,** and the rail segment stacking system **400** can be operated according to the assembly function, for stacking and transporting the rail segment modules **500** to provide the progressively extending mast stack **600.** Once the assembly function is completed, the elevator platform **200** can be engaged with the contiguous elevator rails **620,** and can be operated according to the elevator function, enabling causing the elevator platform **200** to be selectively transported along the fully assembled mast stack **600** via the at least one contiguous elevator rail **620,** in operation of the elevator system **900.** In such a case, the elevator platform **200** can carry its own motor system and pinions that can engage with the respective contiguous rack member **750** which thus constitute the contiguous vertical elevator rail **620** of the

elevator system **900.** Alternatively, the rail segment modules **500** can be configured, together with the elevator platform **200** with an elevator rack and pinion system, or any other suitable transport system, to enable the elevator to be transported over the rail segment modules **500** when stacked in the mast stack **600.** Similarly, an independent alignment system can be provided for maintaining aligned the elevator platform **200** with respect to the mast stack **600** while being operated under elevator function.

Thus, in at least some such examples in which the rail segment stacking system **400** is not integrated with the elevator platform **200,** the elevator function can be performed using a cable system (not shown) rather than the rack and pinion arrangement **700.**

For example, such a cable system can include one or more cables that are anchored at one end thereof to the platform **200** and coupled at the other end of to drive units **290,** and configured such that as the drive units **290** are operated to turn in one direction or the other, the elevator platform **200** is correspondingly raised or lowered along the mast stack **600.** For example, the drive units **290** can be anchored to the mast stack **600,** for example at the top thereof, or at the bottom thereof (in which case the one or more cables are looped around one or more pulleys at the top end of the mast stack **600)**. Alternatively, the drive units **290** can be anchored to the base structure **300,** and the one or more cables are looped around one or more pulleys at the top end of the mast stack **600.**

Alternatively, for example, such a cable system can include one or more cables that are coupled at one end thereof to drive units **290** that are accommodated in the platform **200,** and are coupled at the other end thereof to the mast stack **600** or the base structure **300,** and the cable system is configured such that as the drive units **290** are operated to turn in one direction or the other, the elevator platform **200** is correspondingly raised or lowered along the mast stack **600.** For example, the other end of the one or more cables can be anchored to the mast stack **600,** for example at the top thereof, or at the bottom thereof (in which case the one or more cables are looped around one or more pulleys at the top end of the mast stack **600)**. Alternatively, the aforesaid other end of the one or more cables can be anchored to the base structure **300,** and the one or more cables are looped around one or more pulleys at the top end of the mast stack **600** and down to the drive units **290.**

While in at least this example, the drive system **450** comprises a rack and pinion arrangement **700** in cooperation with the rail segment modules **500**, in at least some other alternative variations of this example, other mechanical arrangements can be provided for the drive system to enable each rail segment module **500** to be fed through the rail segment stacking system **400** from the module receiving station **350,** and for supporting and progressively transporting the progressively elongating mast stack **600** through the frame support **410** in operation of the elevator system **900,** in particular during assembly of the elevator system **900** from the kit **100.** For example, suitable drive systems based on chain and sprocket arrangements, or based on cables and pulleys can also be used.

In at least this example, and referring in particular to Figs. 14, 15, 18, in at least this example, the kit **100** further comprises a dispenser module **850** configured for serially dispensing each one of a plurality of lateral load bearing elements **812** into engaging relationship with respect to the vertical face **VF**. In particular, the dispenser module **850** is configured for selectively engaging the lateral load bearing elements **812** with respect to the vertical face **VF**, in a sequential manner, concurrent with the mast stack **600** being assembled and advanced in an upward direction via the elevator rail assembly structure **400.** However, and as will become clearer herein, in at least some alternative variations of this example, the respective kit can omit the dispenser module.

In at least this example, the dispenser module **850** is configured for being carried by a thereby modified rail segment module **500.** In at least this example, the dispenser module **850** is carried by the first, or uppermost rail segment module **500** in the mast stack **600,** and thus the dispenser module **850** can operate to dispense and engage the lateral load bearing elements **812** in advance of the actual mast stack **600.**

Referring in particular to Fig. 18, each lateral load bearing element **812** comprises a load bearing end **864** and an engaging end **862**. The load bearing end **864** is configured for projecting laterally from the vertical face **VF** when the respective lateral load bearing element **812** is engaged with respect to the vertical face **VF**. The engaging end **862** is configured for being selectively engaged with respect to the vertical face **VF** when dispensed via the dispenser module **850.**

As will become clearer herein, the engaging end **862** is configured for enabling the lateral load bearing element **812** to be fixedly engaged with the vertical face **VF**, and

the load bearing end **864** is configured for enabling the lateral load bearing element **812** to be slidably engaged with respect to the mast stack **600.**

In at least this example, the load bearing end **864** comprises an enlarged head portion **868** connected to a load bearing panel **866F** via a neck portion **869.** The head portion **868** has a first width dimension **WD1,** and the neck portion **869** has a second width dimension **WD2** significantly smaller than the first width dimension **WD1.** For example, a ratio of the first width dimension **WD1** to the second width dimension **WD2** can be any one of: 1.5, 2, 3, 4, 5 or greater than 5.

Referring again to Fig. 3 and Fig. 5(b), each rail segment module **500** comprises at least one lateral load bearing rail element **810** configured for cooperating with the lateral load bearing elements **812,** in particular during assembly of the elevator system **900** from the kit **100,** and after such assembly.

In particular, each lateral load bearing rail element **810** is configured such that when the rail segment modules **500** are coupled and serially stacked in the mast stack **600,** the respective lateral load bearing rail elements **810** are mutually aligned to provide a corresponding contiguous lateral load bearing rail member **870.** In at least some alternative variations of this example, the respective contiguous lateral load bearing elements of the respective mast stack can be mutually aligned to provide a plurality of respective contiguous lateral load bearing rail members.

In any case, in at least this example, the contiguous lateral load bearing rail member **870** is configured for enabling sliding engagement with the load bearing ends **864** of the plurality of lateral load bearing elements **812** in a manner allowing relative translation between the respective contiguous lateral load bearing rail member **870** and the load bearing ends **864** in a first degree of freedom, while preventing free relative movement between the contiguous lateral load bearing rail member **870** and the load bearing ends **864** in a second degree of freedom or in a third degree of freedom. The first degree of freedom is parallel to the elevator transport axis **EA**; the second degree of freedom is orthogonal to the first degree of freedom and is in the lateral direction **LD**; the third degree of freedom is orthogonal to the first degree of freedom and is in the transverse direction **TD**.

In at least this example, the lateral load bearing rail elements **810** are provided in the respective third structural member **510C** of each respective rail segment module **500.**

While in at least this example each rail segment module **500** comprises a single lateral load bearing rail element **810,** in alternative variations of this example, each respective rail segment module can comprise two, or more than two respective lateral load bearing rail elements.

For each rail segment module **500,** the respective lateral load bearing rail element **810** is affixed to the third structural member **510C**, the lateral load bearing rail elements **810** being parallel to the elevator axis **EA**.

Each lateral load bearing rail element **810** has a C-shaped cross-section, as best seen in Fig. 5(b), defining a lateral opening **815** between two arms **816** of the "C". The opening **815** has a second transverse width dimension **WD2'**, and leads into a channel **820** having a first transverse width dimension **WD1'** greater than second transverse width dimension **WD2'**.

For each rail segment module **500,** the respective lateral load bearing rail element **810** extends longitudinally along the longitudinal length of the respective third structural member **510C** (i.e., along the effective longitudinal module dimension **LS**), such that the ends **811, 813** of each lateral load bearing rail element **810** is at the respective ends **511, 513,** respectively, of the respective rail segment module **500.** In at least this example each lateral load bearing rail element **810** is facing mutually opposed lateral direction with respect to the first structural member **510A** or the second structural member **510B** for each respective rail segment module **500.**

The channel **820** and the opening **815** are each co-extensive with the respective third structural member **510C**, and are open at respective opposed longitudinal ends thereof.

The second transverse width dimension **WD2'** is greater than the second width dimension **WD2** but less than the first width dimension **WD1** of the respective load bearing end **864.** The first transverse width dimension **WD1'** is greater than the first width dimension **WD1.** In this manner, the respective lateral load bearing rail elements **810** can slide with respect to the respective lateral load bearing elements **812** while the respective

load bearing end **864** are engaged with respect to the channels **820.** Such engagement allows relative movement between the respective lateral load bearing rail elements **810** (and thus the respective rail segment modules **500,** and thus the mast stack **600)**, and the lateral load bearing elements **812** in a longitudinal direction parallel to the elevator axis **AE**, but prevents any significant relative movement in either the lateral direction **LD** or the transverse direction **TD**, i.e., any such relative movement other than related to the clearance between the respective lateral load bearing rail elements **810** and the respective load bearing end **864.**

Referring also to Fig. 2, the respective lateral load bearing rail elements **810** are positioned with respect to the rail segment modules **500** in a manner such that when the rail segment modules **500** are coupled and stacked in the mast stack **600,** the respective lateral load bearing rail elements **810** are mutually aligned to provide a corresponding contiguous lateral load bearing rail member **870.** Thus in at least this example the mast stack **600** comprises a corresponding single contiguous lateral load bearing rail member **870.** In at least some alternative variations of this example, the mast stack **600** can comprise a plurality of contiguous lateral load bearing rail members, typically parallel to one another and parallel to the elevator axis **EA**.

Referring again to Figs. 15, 16, 17, the dispenser module **850** comprises one or more dispenser magazines **852,** accommodated in a dispenser housing **851.** Each dispenser magazine **852** is configured for accommodating a plurality of lateral load bearing elements **812,** in the form of a respective stack arrangement, and comprises a biasing member **853**, for example a spring, that urges a stack of lateral load bearing elements **812** towards a dispenser channel **855** provided at the front of the housing **851.** The dispenser channel **855** is configured for enabling each of the lateral load bearing elements **812** in the dispenser channel **855** to gravitate to a dispensing station **859** at the lower part of the dispenser channel **855** such that so long as there are lateral load bearing elements **812** in the dispenser module **850,** one lateral load bearing elements **812** will always be located at the dispensing station **859.**

The dispensing station **859** is configured for holding each lateral load bearing elements **812** in turn, and for enabling each such lateral load bearing elements **812** to be dispensed in a lateral direction **LD** towards the vertical face **VF**, during assembly of the

elevator platform **900.** For example, the dispensing station **859** in at least this example comprises a pair of mechanical stops **857** onto which each lateral load bearing element **812** rests via complementary open slots **861** (Fig. 18), while residing at the dispensing station **859.**

The dispenser module **850** further comprises one or more applicators **890** configured for selectively dispensing each lateral load bearing element **812** from the dispenser module **850** and for engaging the dispensed lateral load bearing element **812** with respect to the vertical face **VF**.

As mentioned above, the elevator system **900** can be adapted for use with a variety of different types of vertical structure **VS**, for example building structures having an external facia or structure, for example made from one or more of concrete, stone, wood, glass or metal, such an external facia or structure defining the vertical face **VF**. Accordingly, the form and structure provided for the engaging end **862** of each of the lateral load bearing elements **812** depends on the type of external facia or structure defining the vertical face **VF**, onto which the lateral load bearing elements **812** are to be engaged via the respective engaging ends **862.** Thus, the specific type of lateral load bearing elements **812** for any given implementation of this example can be chosen according to type of external facia or structure defining the vertical face **VF**. Similarly, the form and structure provided for the applicators **890** can also depend on the type of external facia or structure defining the vertical face **VF**, onto which the lateral load bearing elements **812** are to be engaged via the respective engaging ends **862.**

In one such example, the vertical face **VF** comprises a plurality of generally contiguous glass panels. For example, the respective vertical structure **VS** can be an office building, apartment block, or the like. Referring to Figs. 19(a), 19(b), 19(c), the respective engaging ends **862** each correspondingly comprise a plurality of suction cups **866A** configured for engagement with the respective glass panels of the vertical face **VF**. For example, the suction cups **866A** can be manipulated from a disengaged configuration to an engaged configuration, such that in the engaged configuration the suction cups **866A** are adhered onto the glass surface via pressure difference between the atmosphere acting on an external part of the suction cups **866A** and the low pressure cavity on the inside of the suction cups **866A**. The low pressure conditions in the inside of the suction cups **866A** can be created

by pressing the suction cups **866A** onto the glass panels, and this can be accomplished for example by pressing plungers **867A**, which are affixed to the respective suction cups **866A**, towards the respective glass panel. In at least this example, the respective applicators **890** are for example in the form of actuators, for example in the form of pneumatic, hydraulic or electrically actuated jacks, configured for selectively pressing the suction cups **866A** onto the glass panels into the respective engaged configurations. For example, and referring to Fig. 20(a), the applicators **890** are aligned with the plungers **867A** of a particular lateral load bearing element **812** that is currently residing at the dispensing station **859.** In operation of the dispenser module **850** to dispense the currently residing lateral load bearing element **812,** and referring to Fig. 20(b), the applicators **890** operate to extend the respective actuation element (in the form of a jack **891)** to engage the respective plungers **867A** and thereby first push the respective lateral load bearing element **812** into abutting contact with the respective glass panel of the vertical face **VF**. Thereafter, the applicators **890** further operate to press the suction cups **866A** onto the glass panels to ensure adhesion therebetween. At this point the respective lateral load bearing element **812** has been ejected laterally from the dispensing station **859** and is no longer supported by the mechanical stops **857,** and the jacks **891** are retracted (Fig. 20(c)). Thereafter the dispenser module **850** can be displaced in an upward direction parallel to the elevator axis **EA** away from the dispensed lateral load bearing element **812** (together with the mast stack **600**), allowing another lateral load bearing element **812** to be received in the dispensing station **859** (Fig. 20(d)).

In another such example, the vertical face **VF** comprises a plurality of concrete structural elements and/or stone structural elements and/or wood structural elements

For example, the respective vertical structure **VS** can be an office building, warehouse, apartment block, or the like. Referring to Fig. 18, the load bearing panel **866F** of the respective engaging ends **862** each correspondingly comprises a plurality of openings **866B** configured for enabling the load bearing panel **866F** to be affixed with the respective concrete/stone/wood panels of the vertical face **VF** via suitable bolts, nails, screws or the like.

In at least this example, the respective applicators **890** are for example in the form of actuators, for example in the form of electrical screwdrivers or the like, configured for selectively screwing bolts or screws **893** onto the vertical face **VF**. For example, and

referring to Fig. 21(a), the applicators **890** are aligned with the openings **866B** of a particular lateral load bearing element **812** that is currently residing at the dispensing station **859.** In operation of the dispenser module **850** to dispense the currently residing lateral load bearing element **812,** and referring to Fig. 21(b), the applicators **890** operate to screw and insert the respective bolts or screws **893** and thereby engage the bolts or screws **893** with respect to the vertical face **VF**. Thereafter, the applicators **890** further operate to press the lateral load bearing element **812** into full load bearing abutment with respect to the vertical face **VF**. At this point the respective lateral load bearing element **812** has been ejected laterally from the dispensing station **859** and is no longer supported by the mechanical stops **857,** and the respective applicators **890** are retracted (Fig. 21(c)). Thereafter the dispenser module **850** can be displaced in an upward direction parallel to the elevator axis **EA** (together with the mast stack **600**) away from the dispensed lateral load bearing element **812,** allowing another lateral load bearing element **812** to be received in the dispensing station **859** (Fig. 21(d)). A suitable automated loading mechanism (not shown) can be provided for automatically loading new screws/ bolts **893** onto the respective applicators **890.** In alternative variations of this example, the screws/ bolts **893** can be replaced with suitable nails, and the respective applicators **890** are in the form of nail guns, configured for nailing the respective dispensed lateral load bearing element **812** to the vertical face **VF** via nails.

In another such example, the vertical face **VF** comprises a plurality of ferrous metal structural elements. For example, the respective vertical structure **VS** can be in the form of a steel braced structure, for example a tower or pylons. In such examples, the respective engaging ends **862** each correspondingly comprises a load bearing panel with a plurality of magnetic elements configured for magnetic engagement with the ferrous metal structural elements. In such cases, the respective applicators **890** are for example in the form of actuators that are configured to push the respective the respective lateral load bearing element **812** into abutment and magnetic engagement with the vertical face **VF**.

It is to be noted that in each case, including the examples illustrated in Figs. 20(a) to 21(d), the respective load bearing end **864** is vertically aligned with the contiguous lateral load bearing rail member **870,** and thus as the dispenser module **850** is displaced in an upward direction parallel to the elevator axis **EA** after dispensing each lateral load bearing element **812,** the load bearing end **864** thereof is engaged into the channel **820** of the

contiguous lateral load bearing rail member **870,** thereby slidingly engaging the mast stack **600** to the vertical face **VF**.

The kit **100** can be operated to assemble an elevator system **900,** for example as follows.

Referring to Figs. 22(a) to 22(e), and to Figs. 23(a) to 23(e), a carrier vehicle **950**, for example a truck, van trailer etc., can be used to transport the kit **100** to the desired location in which it is desired to assemble the elevator system **900.** For example, the respective vertical structure **VS** of interest can be in the form of a multi-storey building or other tall structure, and the ground zone **GZ** can be for example part of a street or ground next to the vertical structure **VS**.

Once the carrier vehicle **950** is in position next to the ground zone **GZ**, the base structure **300** can be taken out of the carrier vehicle **950** while still in the compact configuration **SC**, and anchored to the ground, as illustrated in Fig. 22(a) and Fig. 22(b). This step can be carried out manually, or in an automated manner if the carrier vehicle **950** is so configured. In at least this example, the rail segment stacking system **400** and the elevator platform **200** are concurrently coupled with the base structure **300.**

Next, and as illustrated in Fig. 22(c), the base structure **300** is operated to transit to the operational configuration **OC** by telescopically extending the support legs **310.** At this point the first rail segment module **500** can be delivered, manually or in an automated manner, to the module receiving station **350** from an outside of the base structure **300,** for example from a suitable rail segment module source. While in the illustrated example, the rail segment module source is provided by the carrier vehicle **950,** in alternative variations of this example, the rail segment module source can be distinct from the carrier vehicle **950,** for example another vehicle may be utilized to carry and dispense the rail segment modules **500.**

In any case, the rail segment module source can include a delivery rail structure **952** configured for facilitating delivery of each rail segment module **500** in turn to the module receiving station **350.**

In at least this example, prior to being inserted into the module receiving station **350,** each rail segment module **500** is transitioned from the deployed configuration **DC** to the

undeployed configuration **UC** via a pivoting operation. In such cases, while stored in the rail segment module source the rail segment modules are in the respective undeployed configuration **UC**.

Once the first said rail segment module **500** has been inserted into the module receiving station **350** (Fig. 22(d) and Fig. 23(a)), the module receiving station **350** is operated to feed the first rail segment module **500** into the rail segment stacking system **400** (Fig. 22(e) and Fig. 23(b)), for example by selectively urging the trolley base **342** in an upward direction through the lift stroke **LS**, from the module receiving position **RP** to the feeding position **FP**. At this point the rail segment stacking system **400** supports and transports the first rail segment module **500** in an upward direction, enabling the trolley base **342** to return in downward direction to the module receiving position **RP**, ready to receive the next rail segment module **500.**

The dispenser module **850** can be coupled to the first rail segment module **500,** and when the first rail module has been transported away from the module receiving station **350,** the dispenser module **850** can be operated to selectively engage at least one lateral load bearing element **812** with respect to the vertical face **VF**.

Next, and referring to Fig, 23(c), a next rail segment module **500** is inserted into the module receiving station **350,** and the module receiving station **350** is operated to feed the received rail segment module **500** into the rail segment stacking system **400,** concurrently coupling the just-fed rail segment module **500** to the previously transported rail segment module **500** to thereby sequentially stack in a bottom-to-top direction successive rail segment modules fed from the module receiving station to form the mast stack **600.**

The rail segment stacking system **400** is then operated to transport the mast stack **600** including the just-coupled rail segment module **500** away from the module receiving station **350**, thereby enabling a further rail segment module **500** to be received by the module receiving station **350**. Concurrently, the previously stacked rail segment module **500** is coupled to the lateral load bearing element **812** previously engaged on the vertical face **VF**, thereby also securing the just-coupled rail segment module **500** to the vertical face **VF**.

The steps of inserting a new rail segment module **500** into the module receiving station **350,** feeding the received rail segment module **500** into the rail segment stacking

system **400** and coupling with the previously fed rail segment module **500,** and transporting the thus growing mast stack **600** via the rail segment stacking system **400**, are repeated for each new rail segment module **500** delivered by the rail segment module source, until the desired height has been reached by the top of the mast stack **600** (Fig. 23(d)). Concurrently, the dispenser module **850** is operated to selectively engage at least one lateral load bearing element **812** with respect to the vertical face **VF** each time the mask stack **600** is advanced in an upward direction responsive to a new rail segment module **500** being provided. At this point, the last-engaged rail segment module **500** can be secured to the ground zone **GZ** and the base structure **300** can optionally be removed. The mast stack **600** is also secured to the vertical face **VF** via the lateral load bearing elements **812,** and the assembled elevator system **900** is ready for use.

Thus, the elevator system **900** can be assembled from the kit **100**, on-site and in a relatively fast manner, and without any need to previously modify the vertical structure **VS**, enabling the kit to be used with a variety of existing building structures, and with respect to emergency evacuation situations in which time may be of the essence.

Referring to Fig. 23(e), the elevator platform **200,** previously uncoupled from the base structure **300,** can be operated to move along the elevator axis **EA** via the contiguous vertical elevator rails **620** in an upward or downward direction. Such operation can be via a passenger carried on the elevator platform **200**, or via remote control from the ground.

In at least some other examples, the lateral load bearing elements **812** are already secured with respect to the vertical face **VF** prior to assembly of the elevator system **900** from the kit **100.** For example, such lateral load bearing elements **812** are provided on the vertical face **VF** during or just after construction of the vertical structure **VS**, or, such lateral load bearing elements **812** were left in place after an elevator system **900** was previously assembled, and subsequently disassembled, at the same site. In such a case, there is no need to couple the dispenser module **850** to any rail segment module **500.** Rather, during assembly of the elevator system **900,** the mast stack **600** is engaged to the existing lateral load bearing elements **812** on the vertical face **VF**.

In examples in which the assembled elevator system **900** is to be used for fire extinguishing functions, the first continuous channel and/or the second continuous channel can be connected to a source of pressurized water, for example a fire hydrant, for example

via coupling to a respective port **535** (for example corresponding to a rail segment module **500** at a bottom end of the mast stack **600)** to allow pressurized water to enter the first continuous channel, the second continuous channel and the delivery pipe elements **530** of the rail segment modules **500** of the mast stack **600.** Furthermore, a different one or more of the ports **535** corresponding to one or more selected rail segment modules **500** of the mast stack **600** (for example at the upper end of the mast stack **600)** can be opened, to thereby allow pressurized water to be delivered to the vertical structure **VS** at heights corresponding to the one or more open ports **535.** Optionally, a hose pipe can be coupled to a port **535** to thereby enable pressurized water to be delivered via the hose pipe.

Disassembly of the elevator system **900** comprises essentially the same steps as for the assembly operation, but in reverse. The main difference is that during disassembly, the lateral load bearing elements **812** are not typically removed from the vertical face **VF**, though in at least some examples, the lateral load bearing elements **812** can be removed from the vertical face **VF** during disassembly, or after disassembly.

In the method claims that follow, alphanumeric characters and Roman numerals used to designate claim steps are provided for convenience only and do not imply any particular order of performing the steps.

Finally, it should be noted that the word "comprising" as used throughout the appended claims is to be interpreted to mean "including but not limited to".

While there has been shown and disclosed examples in accordance with the presently disclosed subject matter, it will be appreciated that many changes may be made therein without departing from the scope of the presently disclosed subject matter as set out in the claims.

CLAIMS:

1. A kit for providing an elevator system defining an elevator transport axis with respect to an exposed vertical face of a vertical structure, the kit comprising an elevator platform, a plurality of rail segment modules, a base structure and a rail segment stacking system, wherein:

the rail segment modules each comprises a respective one or more elevator rail elements, and the rail segment modules are configured for being serially stacked contiguously with respect to one another via the rail segment stacking system to thereby provide a correspondingly progressively elongating mast stack wherein the respective said elevator rail elements are mutually aligned to form at least one contiguous vertical elevator rail parallel to the elevator transport axis, the rail segment modules being further configured for being in selectively secured engagement with respect to the vertical face in operation of the elevator system;

the elevator platform is configured for being selectively transported along the mast stack parallel to the elevator transport axis via the at least one contiguous vertical elevator rail, in operation of the elevator system;

the base structure is configured for being anchored with respect to a ground zone proximal to the vertical face, and having a module receiving station configured for selectively receiving each said rail segment module in turn from a rail segment module source, and for feeding in turn each received said rail segment module to the rail segment stacking system;

the rail segment stacking system is configured for on-site coupling and bottom-to-top stacking of the rail segment modules fed thereto from the module receiving station to thereby provide the progressively elongating mast stack, and for selectively transporting the progressively elongating mast stack vertically and progressively further away from the ground zone after each said rail segment module is coupled and stacked thereto.

2. The kit according to claim 1, wherein the rail segment stacking system configured:

- for transporting a first said rail segment module away from the module receiving station thereby enabling a further said rail segment module to be received by the module receiving station from the rail segment module source;

- for enabling successive said rail segment module fed thereto from the module receiving station to be coupled in turn to the currently last-transported said rail segment module to thereby sequentially stack in a bottom-to-top direction successive said rail segment modules fed from the module receiving station to form the progressively elongating mast stack, the mast stack having a progressively increasing vertical dimension correlated to the number of said rail segment modules stacked in the mast stack, and
- for transporting the mast stack including the just-coupled rail segment module away from the module receiving station thereby enabling a further said rail segment module to be received by the module receiving station.

3. The kit according to any one of claims 1 to 2, wherein the rail segment stacking system comprises a frame support configured for enabling each said rail segment module to be fed therethrough from the module receiving station, and a drive system configured for progressively transporting the progressively elongating mast stack through the frame support in operation of the system.

4. The kit according to claim 3, wherein the drive system comprises a rack and pinion arrangement in cooperation with the rail segment modules, the drive system further comprises a motor drive system operatively coupled to the rack and pinion system, the rack and pinion arrangement comprising a first plurality of rack elements and a second plurality of pinions, wherein the rack elements are provided in the rail segment modules and the pinions are provided in the frame support.

5. The kit according to claim 4, wherein the pinions are rotatably mounted with respect to the frame support and operatively coupled to the motor drive system.

6. The kit according to any one of claims 4 to 5, wherein each said rail segment module comprises at least one said rack element corresponding to each said pinion, the at least one said rack element being provided in respective said elevator rail elements such that when the rail segment modules are coupled and stacked in said mast stack the respective said rack elements corresponding to each said pinion are mutually aligned to provide the corresponding said at least one contiguous rack member, thereby enabling the mast stack to be translated in a linear direction responsive to the pinions being turned by the motor drive system.

7. The kit according to claim 3, wherein the drive system comprises a rack and pinion arrangement in cooperation with the rail segment modules, the rack and pinion arrangement comprising a first plurality of rack elements and a second plurality of pinions, wherein the rack elements are provided in the frame support and the pinions are provided in the rail segment modules.

8. The kit according to any one of claims 1 to 7, wherein the rail segment modules each comprises a respective one or more guide rail elements, configured to be mutually aligned to form corresponding one or more contiguous guide rails when the rail segment modules are serially stacked contiguously with respect to one another in the progressively elongating mast stack, and wherein the rail segment stacking system comprises a plurality of alignment rollers configured for cooperating with the one or more contiguous guide rails to maintain the rail segment stacking system aligned with respect to the mast stack.

9. The kit according to any one of claims 1 to 8, wherein the rail segment stacking system is integrated with the elevator platform.

10. The kit according to claim 9, wherein each said contiguous vertical elevator rail, is provided by at least one said contiguous rack member.

11. The kit according to any one of claims 9 to 10, comprising a locking arrangement for selectively locking and unlocking the elevator platform with respect to the base structure, wherein in the respective locked configuration, the rail segment stacking system can be operated for stacking and transporting the rail segment modules to provide the mast stack, and wherein in the respective unlocked configuration, the rail segment stacking system is configured for causing the elevator platform to be selectively transported along the mast stack via the at least one contiguous elevator rail, in operation of the elevator system.

12. The kit according to any one of claims 1 to 8, wherein the rail segment stacking system is fixedly mounted to the base structure, and wherein the elevator platform is independent structurally and operationally with respect to the rail segment stacking system.

13. The kit according to any one of claims 1 to 12, wherein the rail segment modules are each configured for being deployed between a stored configuration and a stacking configuration, wherein in the stowed configuration each respective rail segment module has a compact form relative to the stacked configuration, and wherein in the stacked

configuration, the respective rail segment module is capable of being stacked with other said rail segment modules to provide the mast stack.

14. The kit according to claim 13, wherein in said stowed configuration, each respective said rail segment module is circumscribed by a first envelope enclosing a first volume, and wherein in said stacked configuration, each respective said rail segment module is circumscribed by a second envelope enclosing a second volume, and wherein said second volume is greater than said first volume.

15. The kit according to any one of claims 1 to 12, wherein the rail segment modules are each configured having a fixed geometry capable of enabling the rail segment modules to be stacked with respect to one another to provide the mast stack.

16. The kit according to any one of claims 1 to 15, wherein each said rail segment module comprises a first coupling arrangement at a first longitudinal end thereof, and a second coupling arrangement at a second longitudinal end thereof, wherein the first coupling arrangement of each said rail segment module is configured for coupling with a said second coupling arrangement of another said rail segment module, and wherein the second coupling arrangement of each said rail segment module is configured for coupling with a said first coupling arrangement of another said rail segment module.

17. The kit according to any one of claims 4 to 6, 8 to 16, wherein each said rail segment module comprises a plurality of structural members interconnected in load bearing relationship.

18. The kit according to claim 17, wherein each said structural member is in the form of a respective strut extending along an axial length of the respective rail segment module.

19. The kit according to any one of claims 17 to 18, wherein each said rail segment module comprises at least three said structural members, wherein each said structural member is in the form of a respective strut having a strut upper end and a respective lower strut end.

20. The kit according to claim 19, wherein each said rail segment module comprises a first coupling member at one rail segment module end, and a second coupling member at another rail segment module end, wherein each said first coupling member is configured for being selectively coupled with a respective said second coupling member of another said rail segment module, and wherein each said second coupling member is configured for being selectively coupled with a respective said first coupling member of another said rail segment module.

21. The kit according to any one of claims 17 to 20, wherein each rail segment module comprises a respective first said rack element fixedly mounted to a first said structural member, and a respective said second said rack element fixedly mounted to a second said structural member.

22. The kit according to claim 21, wherein for each said rail segment the respective said first said structural member and the respective said second structural member are in fixed transversely spaced relationship.

23. The kit according to any one of claims 21 to 22, wherein each said rail segment module comprises at least a third said structural member laterally spaced from said first structural member and said second structural member by a segment lateral spacing.

24. The kit according to claim 23, wherein for each said rail segment the respective said first said structural member and the respective said second structural members are movably mounted with respect to the respective said third structural member, and movable between an undeployed configuration and a deployed configuration, wherein in the undeployed configuration each respective rail segment module has a compact form relative to the deployed configuration, and wherein in the deployed configuration, the respective rail segment module is capable of being stacked with other said rail segment modules to provide the mast stack.

25. The kit according to any one of claims 1 to 24, wherein the rail segment modules are configured for being in selectively secured engagement with respect to the vertical face via a plurality of lateral load bearing elements previously provided on the vertical face.

26. The kit according to claim 25, wherein said lateral load bearing elements each comprises a load bearing end projecting laterally from the vertical face, and wherein each said rail segment module comprises at least one lateral load bearing rail element configured such that when the rail segment modules are coupled and stacked in said mast stack the respective said at least one lateral load bearing rail elements are mutually aligned to provide the corresponding said at least one contiguous lateral load bearing rail member, the least one contiguous lateral load bearing rail member being configured for enabling sliding engagement with the load bearing ends of the plurality of said lateral load bearing elements in a manner allowing relative translation between the at least one contiguous lateral load bearing rail member and the load bearing ends in a first degree of freedom while preventing free relative movement between the at least one contiguous lateral load

bearing rail member and the load bearing ends in a second degree of freedom and in a third degree of freedom orthogonal to the first degree of freedom, wherein the first degree of freedom is parallel to the elevator transport axis.

27. The kit according to any one of claims 1 to 24, further comprising a dispenser module configured for selectively engaging a plurality of lateral load bearing elements with respect to the vertical face, concurrent with the mast stack being assembled via the elevator rail assembly structure.

28. The kit according to claim 27, wherein said lateral load bearing elements each comprises a load bearing end configured for projecting laterally from the vertical face when the respective lateral load bearing element is engaged with respect to the vertical face, and an engaging end configured for being selectively engaged with respect to the vertical face when dispensed via the dispenser module.

29. The kit according to claim 28, wherein the vertical face comprises a plurality of glass panels, and the respective engaging ends each correspondingly comprise a plurality of suction cups configured for engagement with the glass panels.

30. The kit according to claim 28, wherein the vertical face comprises a plurality of ferrous metal structural elements, and the respective engaging ends each correspondingly comprises a plurality of magnetic elements configured for magnetic engagement with the ferrous metal structural elements.

31. The kit according to claim 28, wherein the vertical face comprises a plurality of concrete or stone structural elements, and the respective engaging ends each correspondingly comprises a plurality of nails or screws configured for engagement with the concrete or stone structural elements.

32. The kit according to any one of claims 28 to 31, wherein the dispenser module is configured for serially dispensing the lateral load bearing elements into engaging relationship with respect to the vertical face.

33. The kit according to claim 32, the dispenser module comprising at least one dispenser magazine configured for accommodating a plurality of said lateral load bearing elements, and an applicator configured for selectively dispensing each said lateral load bearing element from said at least one magazine and for engaging the dispensed said lateral load bearing element with respect to the vertical face.

34. The kit according to any one of claims 27 to 33, wherein each said rail segment module comprises at least one lateral load bearing rail element configured such that when

the rail segment modules are coupled and stacked in said mast stack the respective said at least one lateral load bearing rail elements are mutually aligned to provide the corresponding said at least one contiguous lateral load bearing rail member, the least one contiguous lateral load bearing rail member being configured for enabling sliding engagement with the load bearing ends of the plurality of said lateral load bearing elements in a manner allowing relative translation between the at least one contiguous lateral load bearing rail member and the load bearing ends in a first degree of freedom while preventing free relative movement between the at least one contiguous lateral load bearing rail member and the load bearing ends in a second degree of freedom and in a third degree of freedom orthogonal to the first degree of freedom, wherein the first degree of freedom is parallel to the elevator transport axis.

35. The kit according to any one of claims 27 to 34, wherein said dispenser module is configured for being carried by a thereby modified said rail segment module.

36. The kit according to claim 35, wherein said dispenser module is mounted atop a first said rail segment module.

37. The kit according to any one of claims 1 to 36, further comprising a fire extinguishing system 800.

38. A rail segment module, for use with a kit as defined in any one of claims 1 to 37.

39. An elevator platform for use with a kit as defined in any one of claims 1 to 37.

40. A base structure for use with a kit as defined in any one of claims 1 to 37.

41. A rail segment stacking system for use with a kit as defined in any one of claims 1 to 37.

42. An elevator system provided by a kit as defined in any one of claims 1 to 37.

43. An elevator rail assembly structure configured for on-site stacking of the rail segment modules to provide a progressively elongating mast stack, the elevator rail assembly structure comprising a base structure and a rail segment stacking system, wherein:

the base structure is configured for being anchored with respect to a ground zone proximal to the vertical face, and having a module receiving station configured for selectively receiving each said rail segment module in turn from a rail segment module source, and for feeding in turn each received said rail segment module to the rail segment stacking system;

the rail segment stacking system is configured for on-site coupling and bottom-to-top stacking of the rail segment modules fed thereto from the module receiving station to thereby provide the progressively elongating mast stack, and for selectively transporting the progressively elongating mast stack vertically and progressively further away from the ground zone after each said rail segment module is coupled and stacked thereto.

44. The elevator rail assembly structure according to claim 43, wherein the rail segment stacking system configured:

- for transporting a first said rail segment module away from the module receiving station thereby enabling a further said rail segment module to be received by the module receiving station from the rail segment module source;
- for enabling successive said rail segment module fed thereto from the module receiving station to be coupled in turn to the currently last-transported said rail segment module to thereby sequentially stack in a bottom-to-top direction successive said rail segment modules fed from the module receiving station to form the progressively elongating mast stack, the mast stack having a progressively increasing vertical dimension correlated to the number of said rail segment modules stacked in the mast stack, and
- for transporting the mast stack including the just-coupled rail segment module away from the module receiving station thereby enabling a further said rail segment module to be received by the module receiving station.

45. A method for providing an elevator system with respect to an exposed vertical face of a vertical structure, the method comprising:

(a) providing a kit as defined in any one of claims 1 to 37;

(b) selectively inserting a first said rail segment module into the module receiving station, and causing the module receiving station to feed the first said rail segment module into the rail segment stacking system;

(c) selectively inserting a next said rail segment module into the module receiving station, and causing the module receiving station to feed the received said rail segment module into the rail segment stacking system, and concurrently coupling the just-fed said rail segment module to the currently last-transported said rail segment module to thereby sequentially stack in a

bottom-to-top direction successive said rail segment modules fed from the module receiving station to form the mast stack;

(d) transporting the mast stack including the just-coupled said rail segment module away from the module receiving station thereby enabling a further said rail segment module to be received by the module receiving station;

(e) securing the just-coupled said rail segment module to the vertical face;

(f) repeating steps (c), (d) and (e) until in step (c) a final said rail segment module is inserted into the module receiving station.

46. The method according to claim 45, further comprising:

(g) applying steps (d) and (e) to the final said rail segment module inserted into the module receiving station in step (c).

47. The method according to claim 45, further comprising:

(h) securing the final said rail segment module to the ground zone.

48. The method according to claim 47, further comprising:

(i) removing the base structure from the ground zone.

49. The method according to any one of claims 45 to 48, further comprising:

(j) mounting the elevator platform to the mast stack, and selectively operating the elevator system to cause the elevator platform to be vertically transported along the vertical mast stack via the at least one contiguous vertical elevator rail.

50. The method according to any one of claims 45 to 48, further comprising the step:

(k) wherein the rail segment stacking system is mounted to the elevator platform to the mast stack, and selectively operating the elevator system to cause the elevator platform to be vertically transported along the vertical mast stack via the at least one contiguous vertical elevator rail.

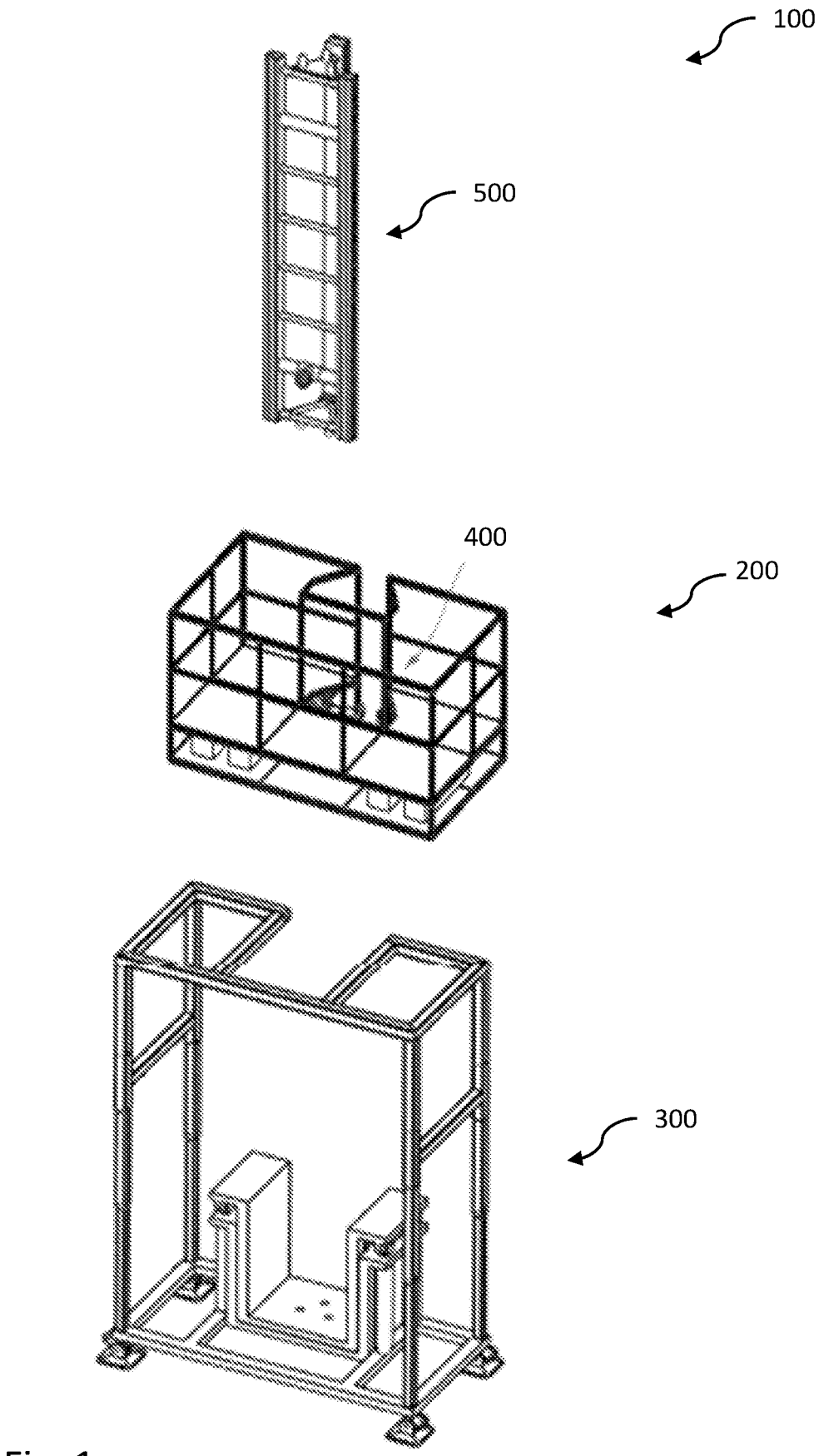

Fig. 1

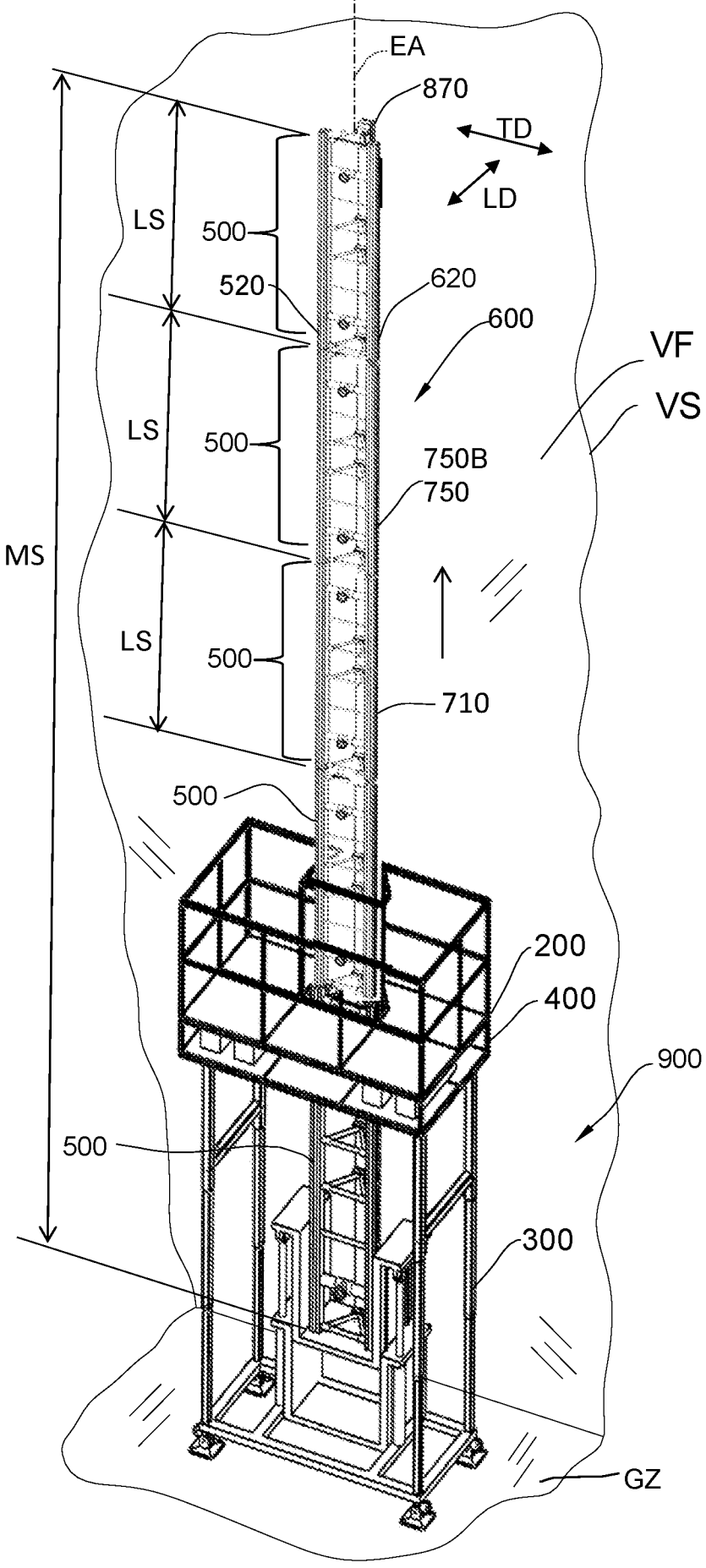
EA
870
TD
LD
LS
500
520
620
600
VF
VS
LS
500
750B
750
MS
LS
500
710
500
200
400
900
500
300
GZ

Fig. 2

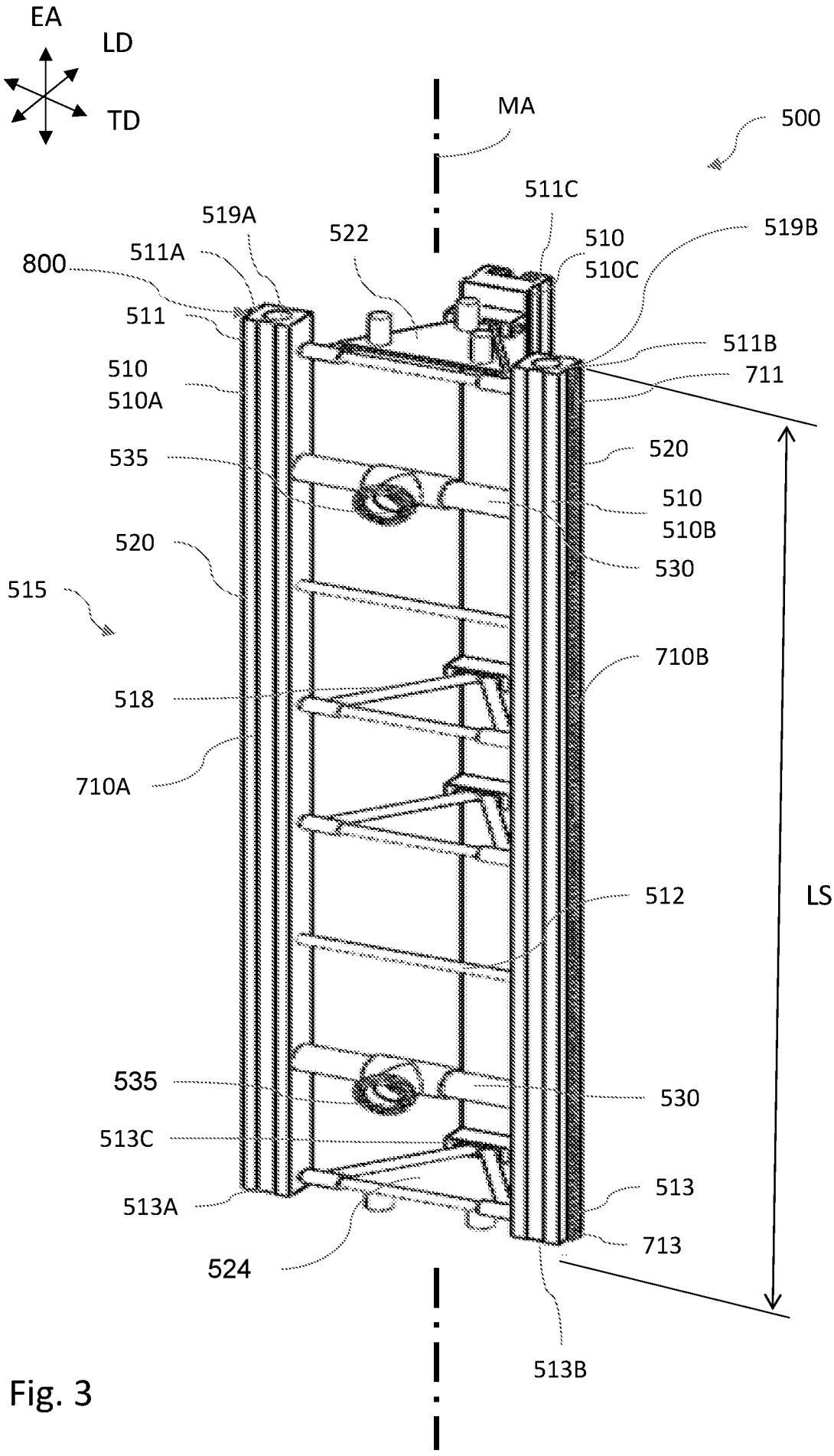
EA
LD
TD
MA
500
511C
519A
522
510
519B
800
511A
510C
511
511B
510
711
510A
520
535
510
510B
520
530
515
710B
518
710A
512
LS
535
530
513C
513
513A
713
524
513B

Fig. 3

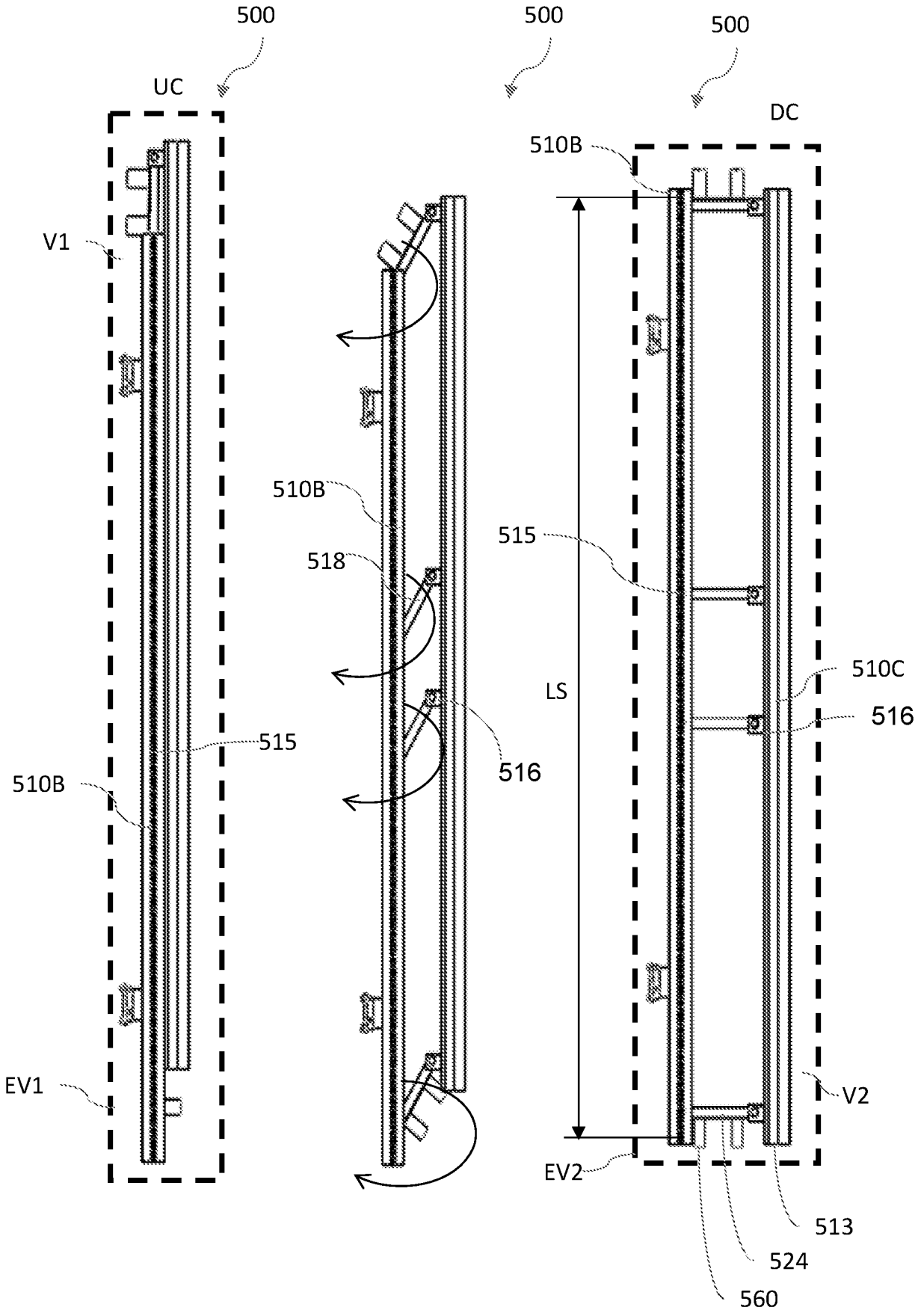

Fig. 4(c) Fig. 4(b) Fig. 4(a)

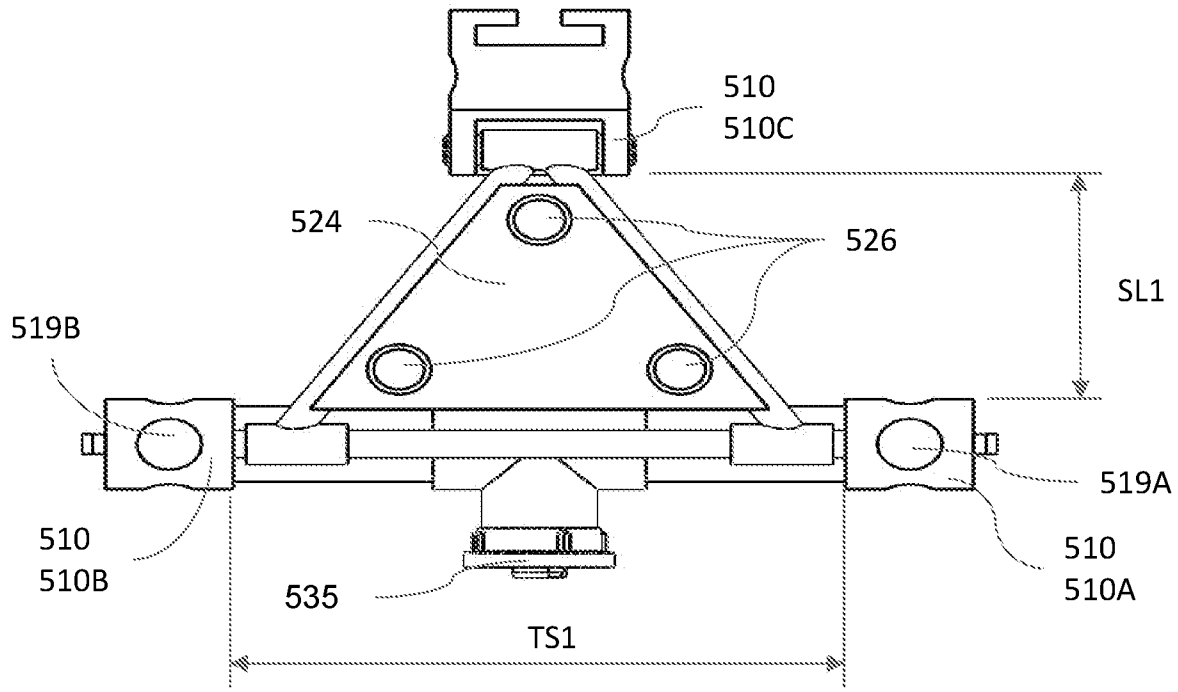
510
510C
524
526
SL1
519B
519A
510
510B
510
510A
535
TS1

Fig. 5(a)

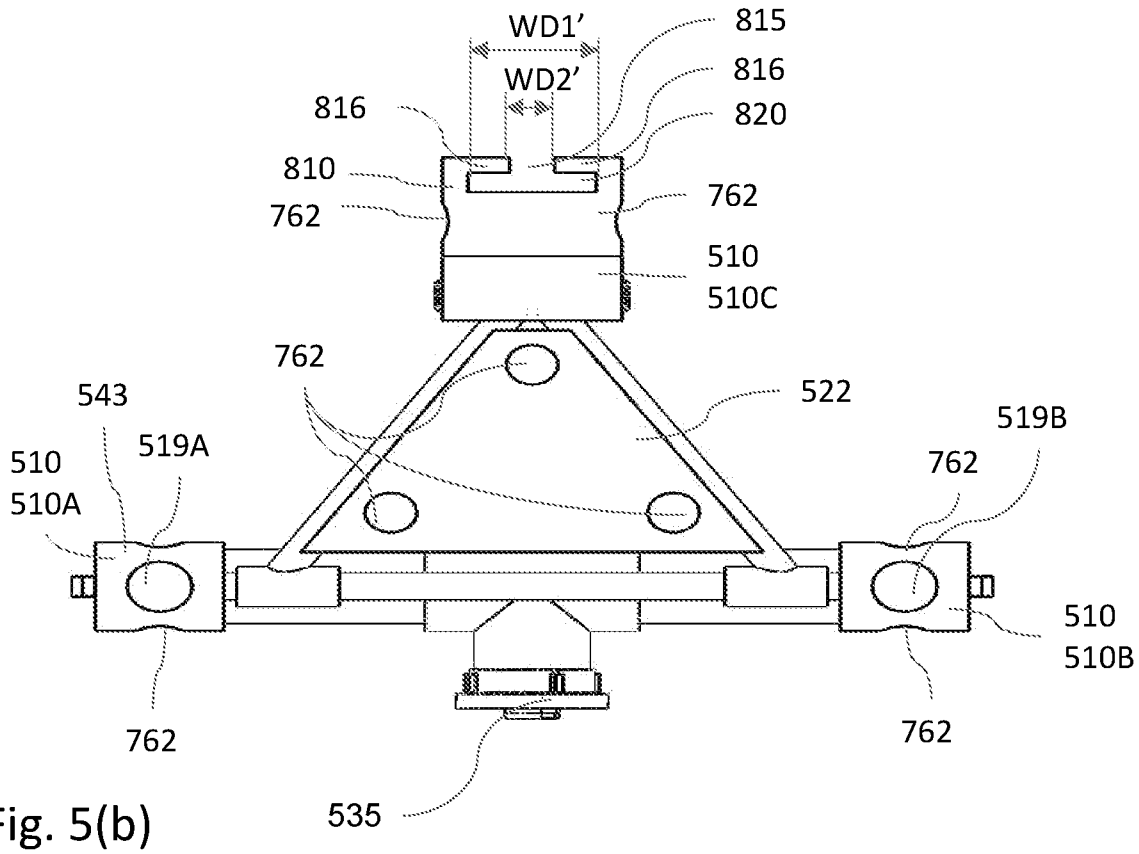
WD1'
WD2'
815
816
820
816
810
762
762
510
510C
762
543
522
519B
519A
510
510A
762
510
510B
762
762
535

Fig. 5(b)

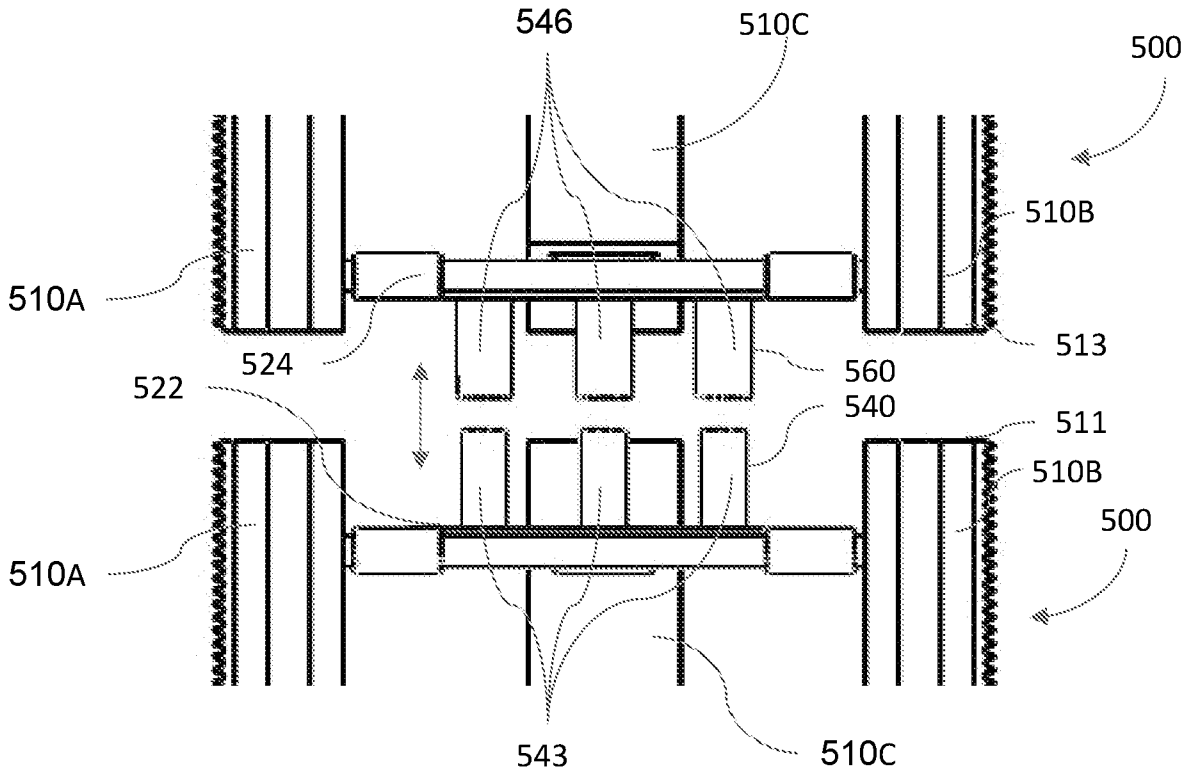
546
510C
500
510B
510A
513
524
560
522
540
511
510B
500
510A
543
510C

Fig. 6(a)

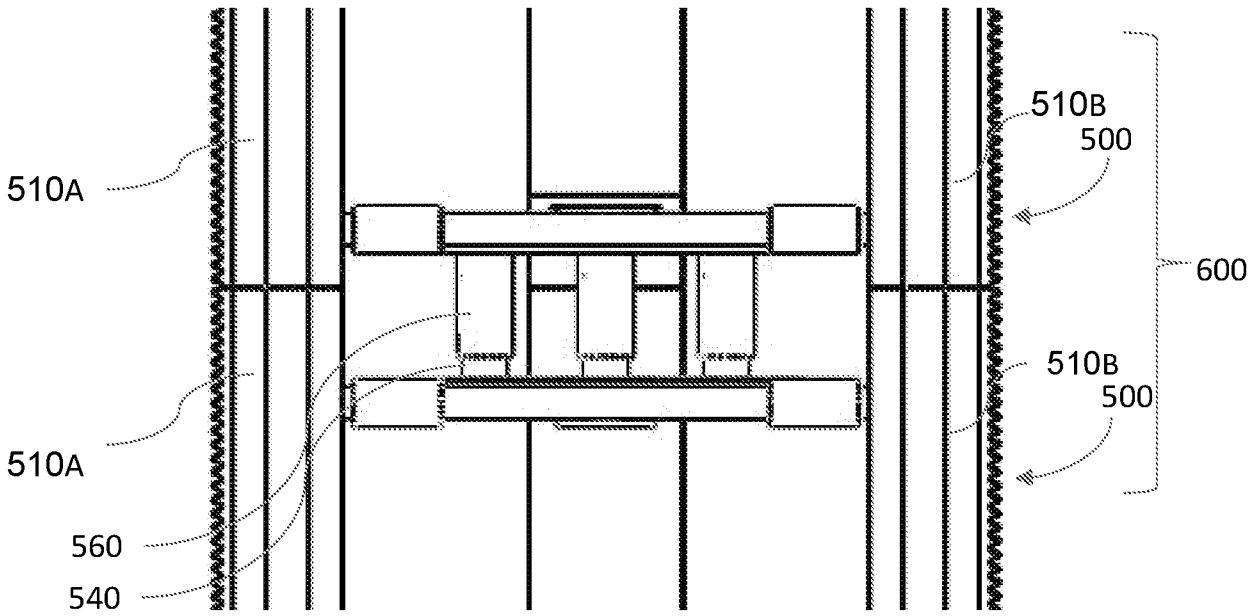
510B
500
510A
600
510B
500
510A
560
540

Fig. 6(b)

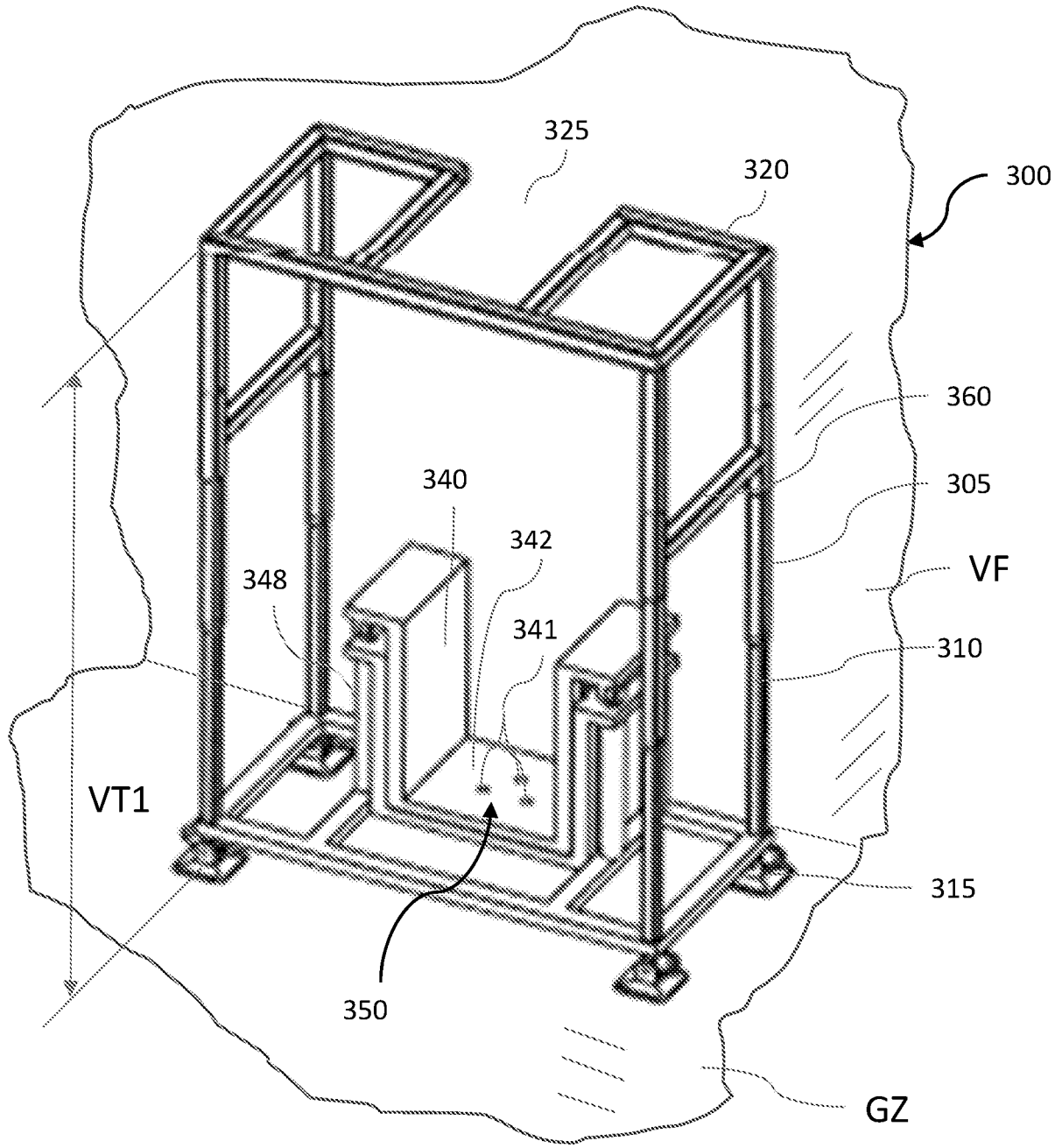

Fig. 7

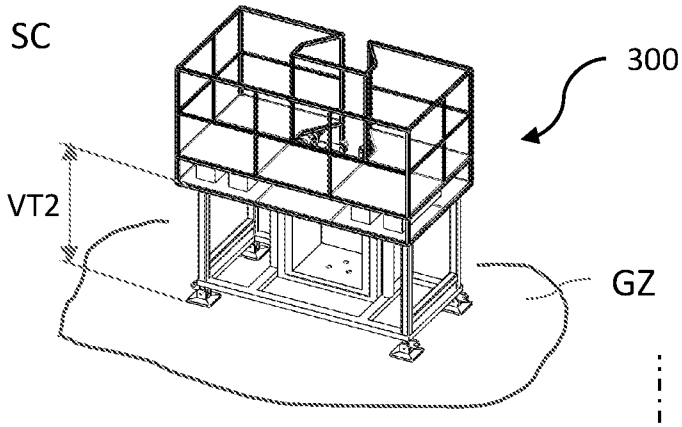

Fig. 8(a)

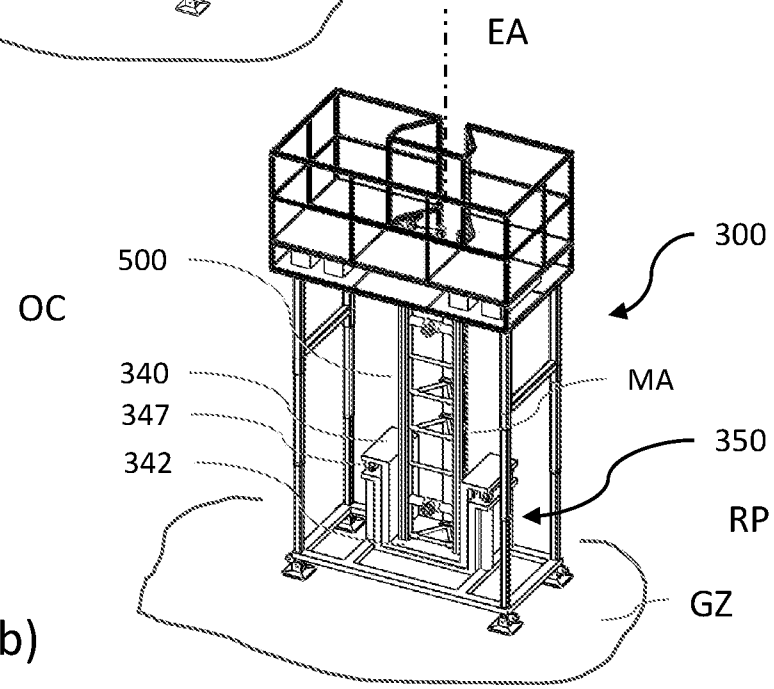

Fig. 8(b)

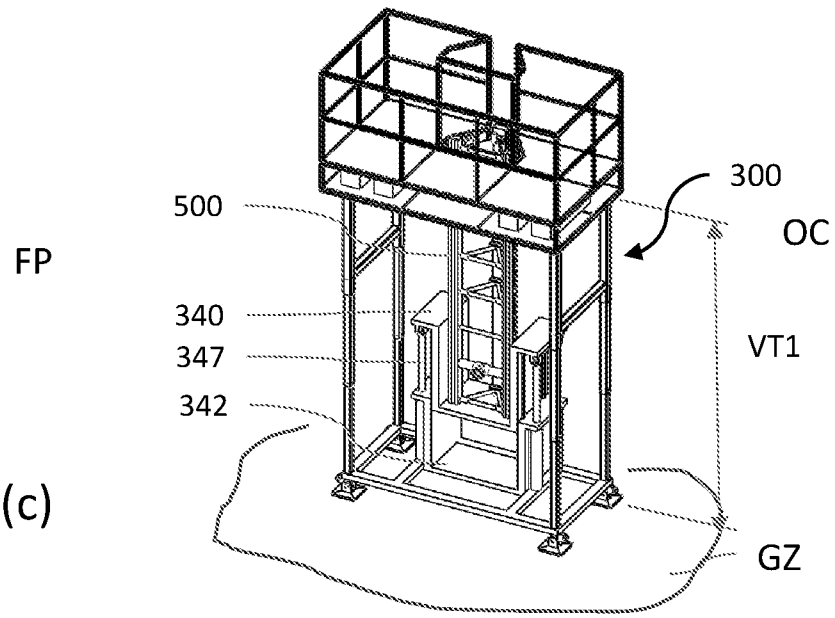

Fig. 8(c)

Fig. 9(a)

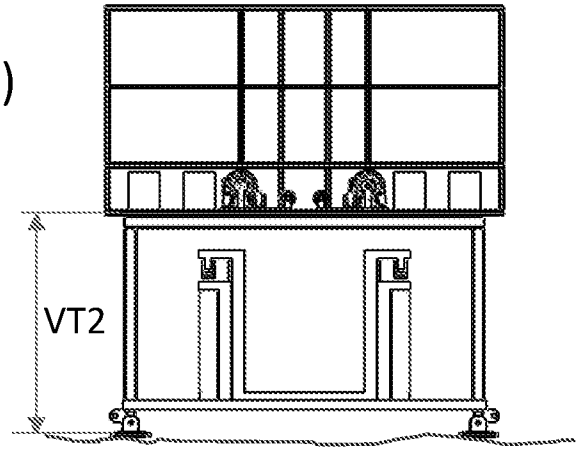

Fig. 9(b)

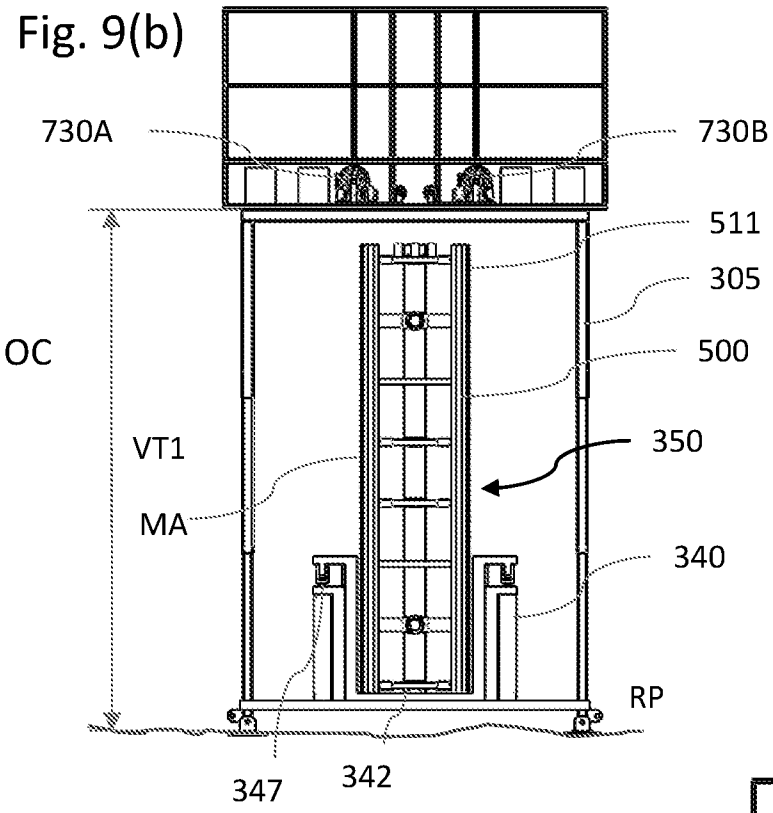

Fig. 9(c)

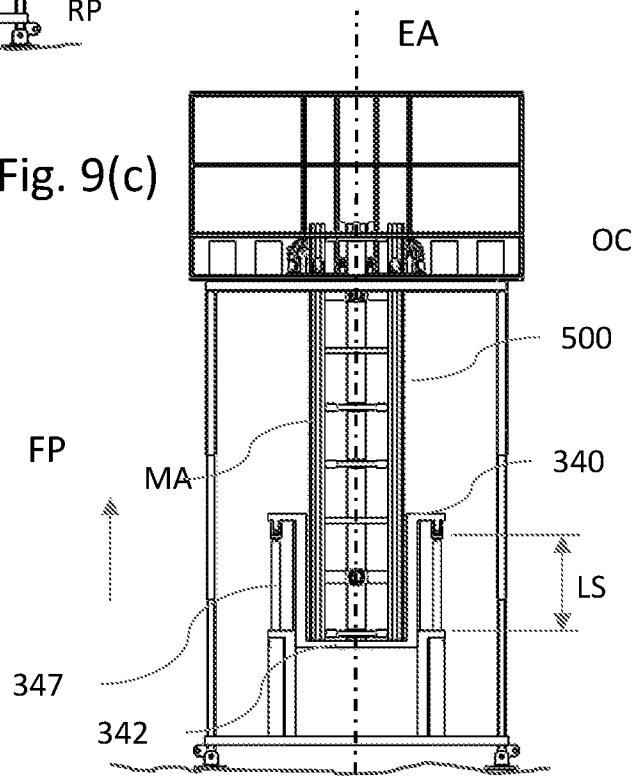

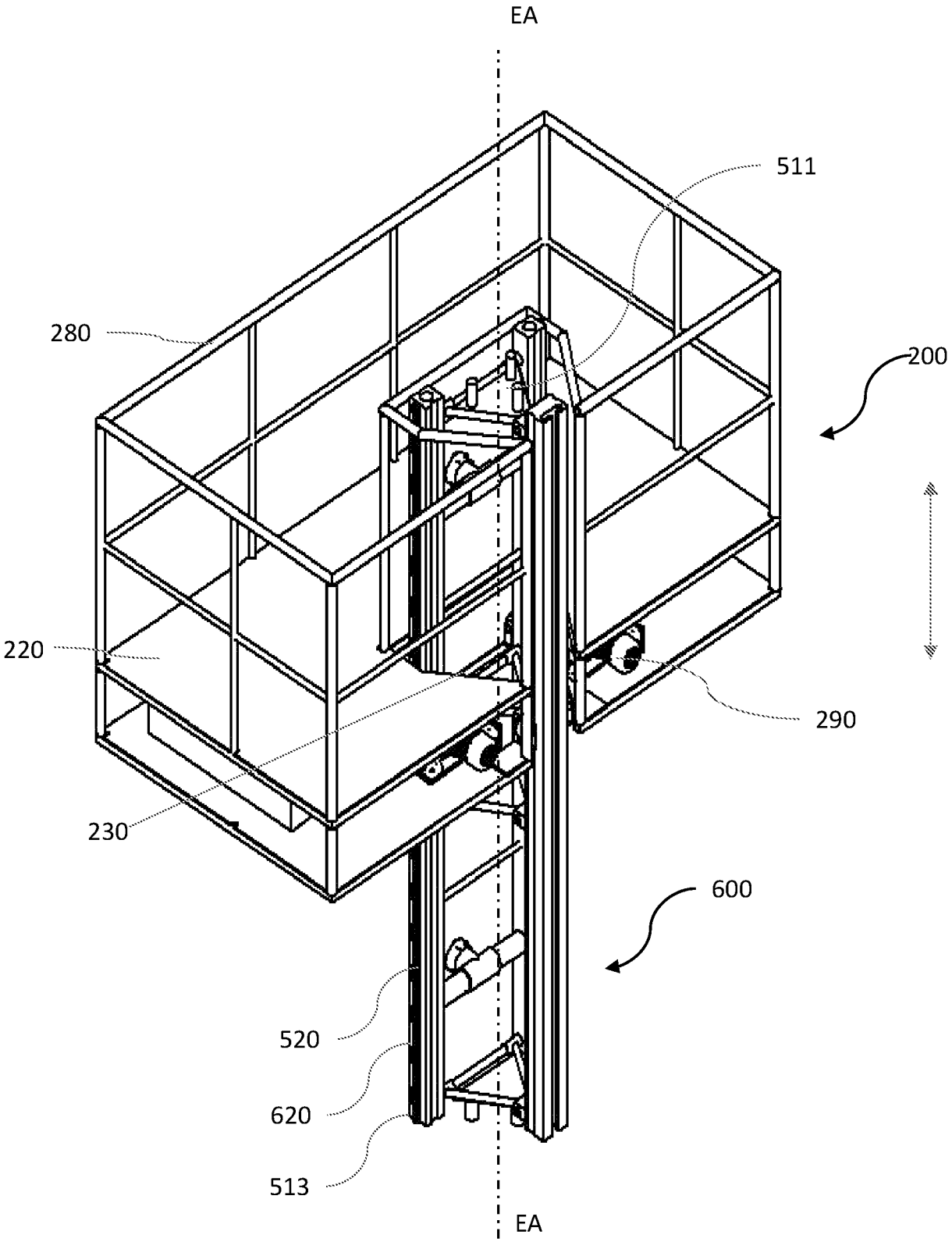

Fig. 10

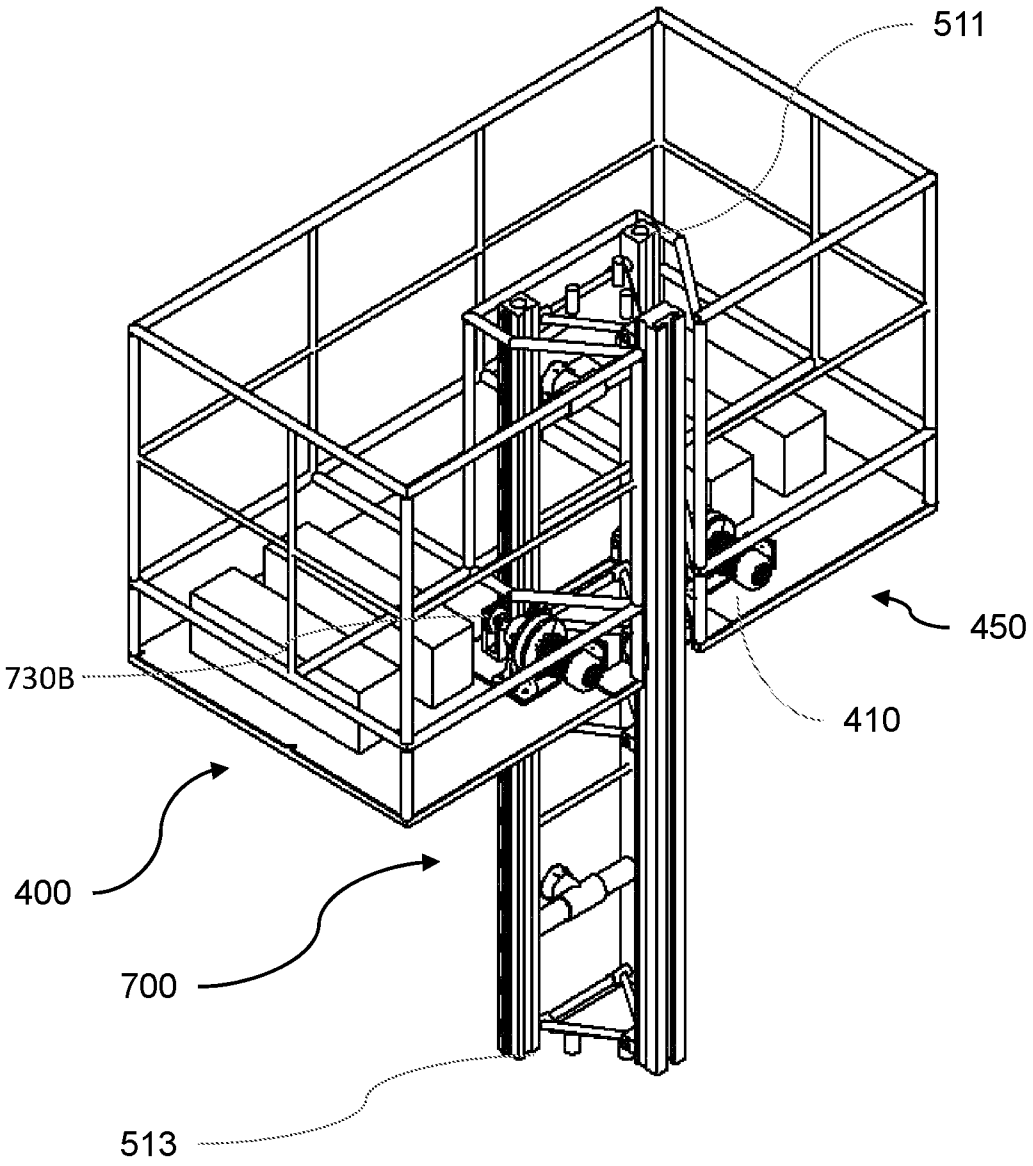

Fig. 11

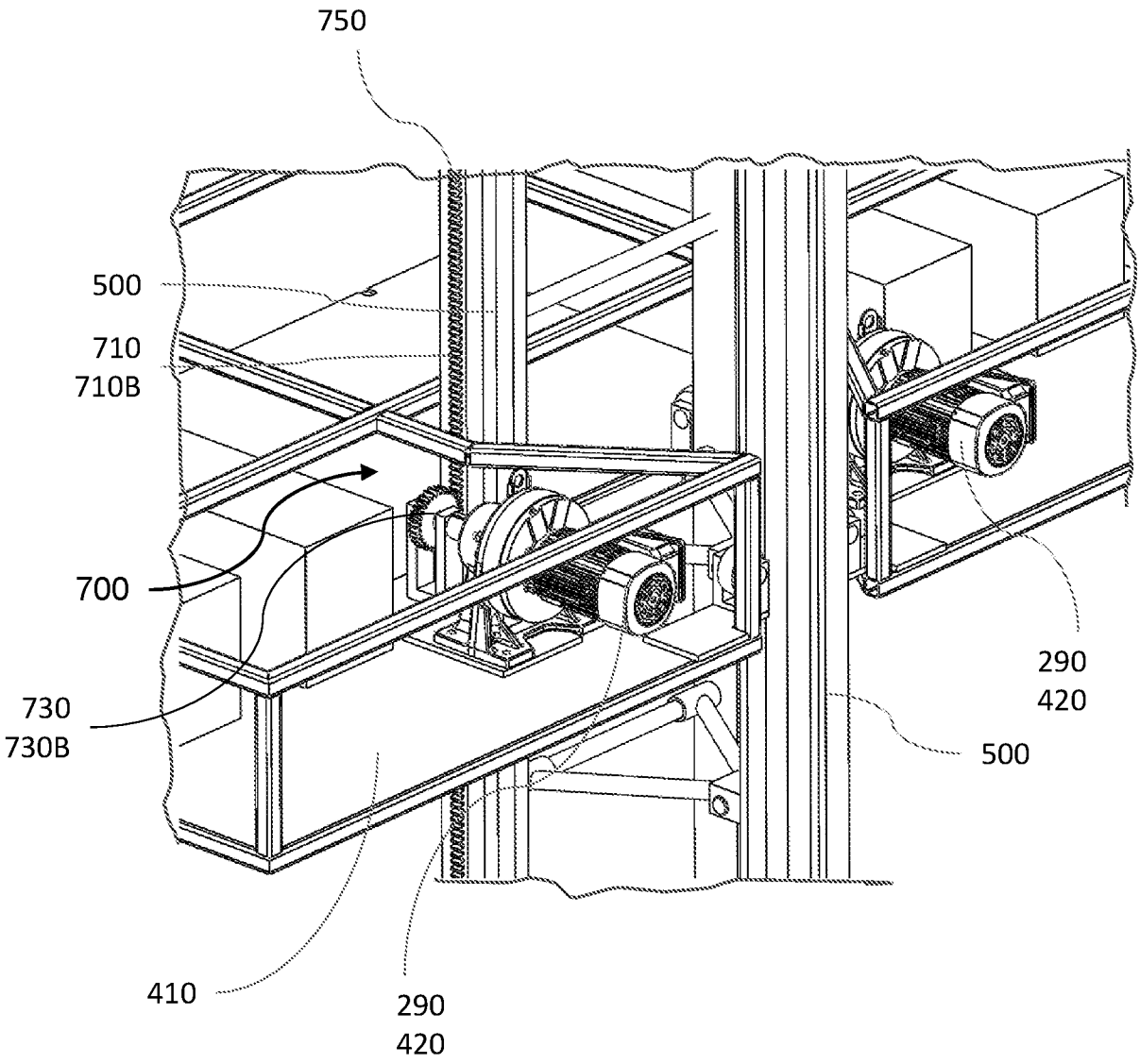

Fig. 11(a)

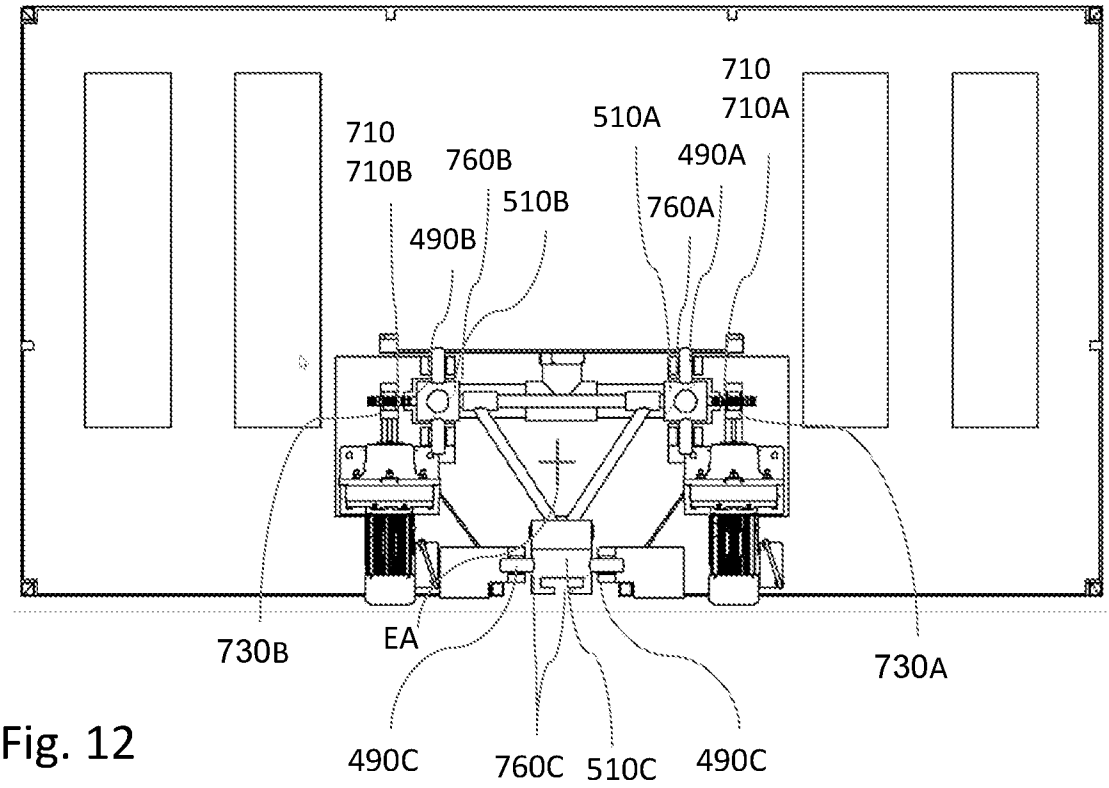
710
710B
760B
510B
490B
510A
490A
760A
710
710A
730B
EA
730A
490C
760C
510C
490C

Fig. 12

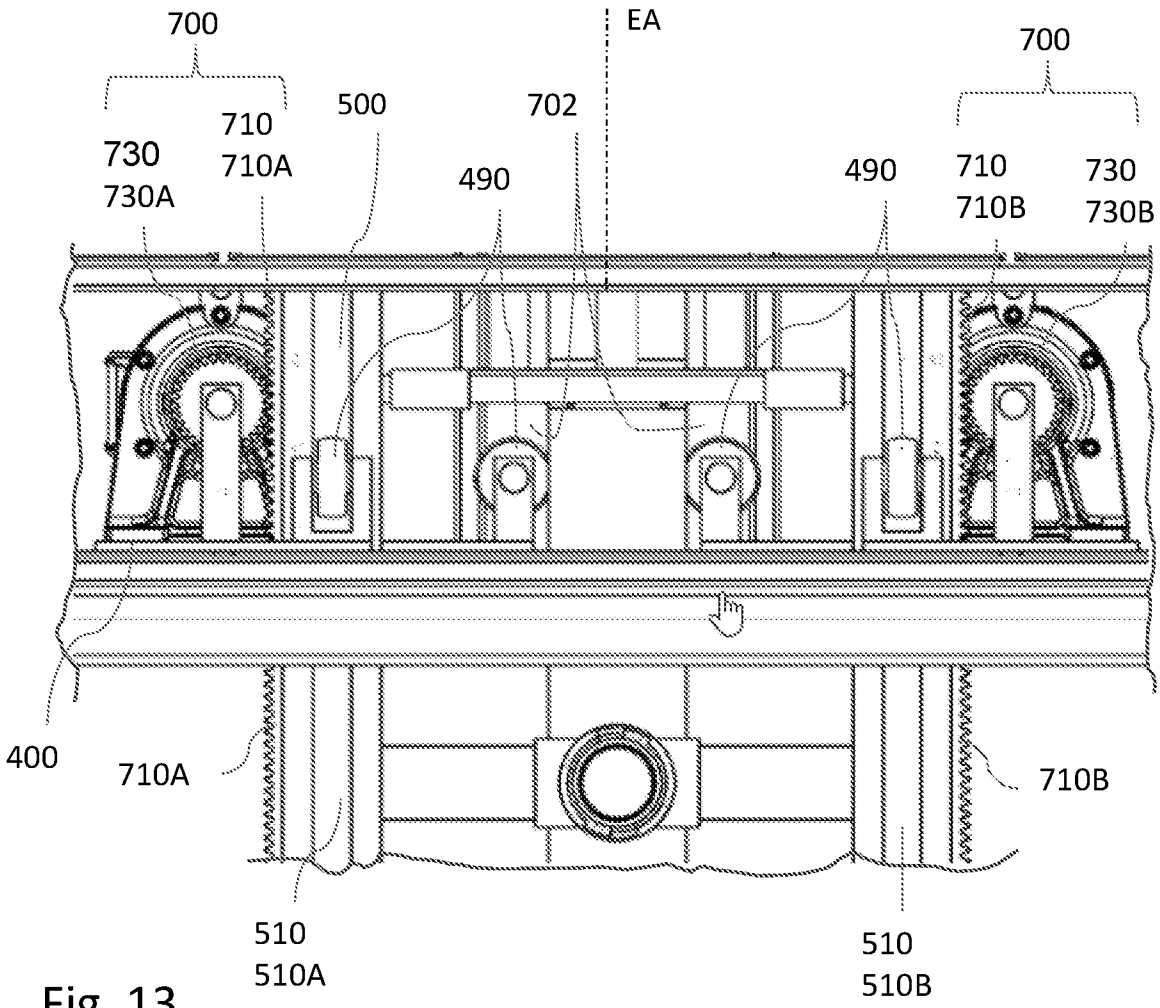
700
730
730A
710
710A
500
490
702
EA
490
700
710
710B
730
730B
400
710A
710B
510
510A
510
510B

Fig. 13

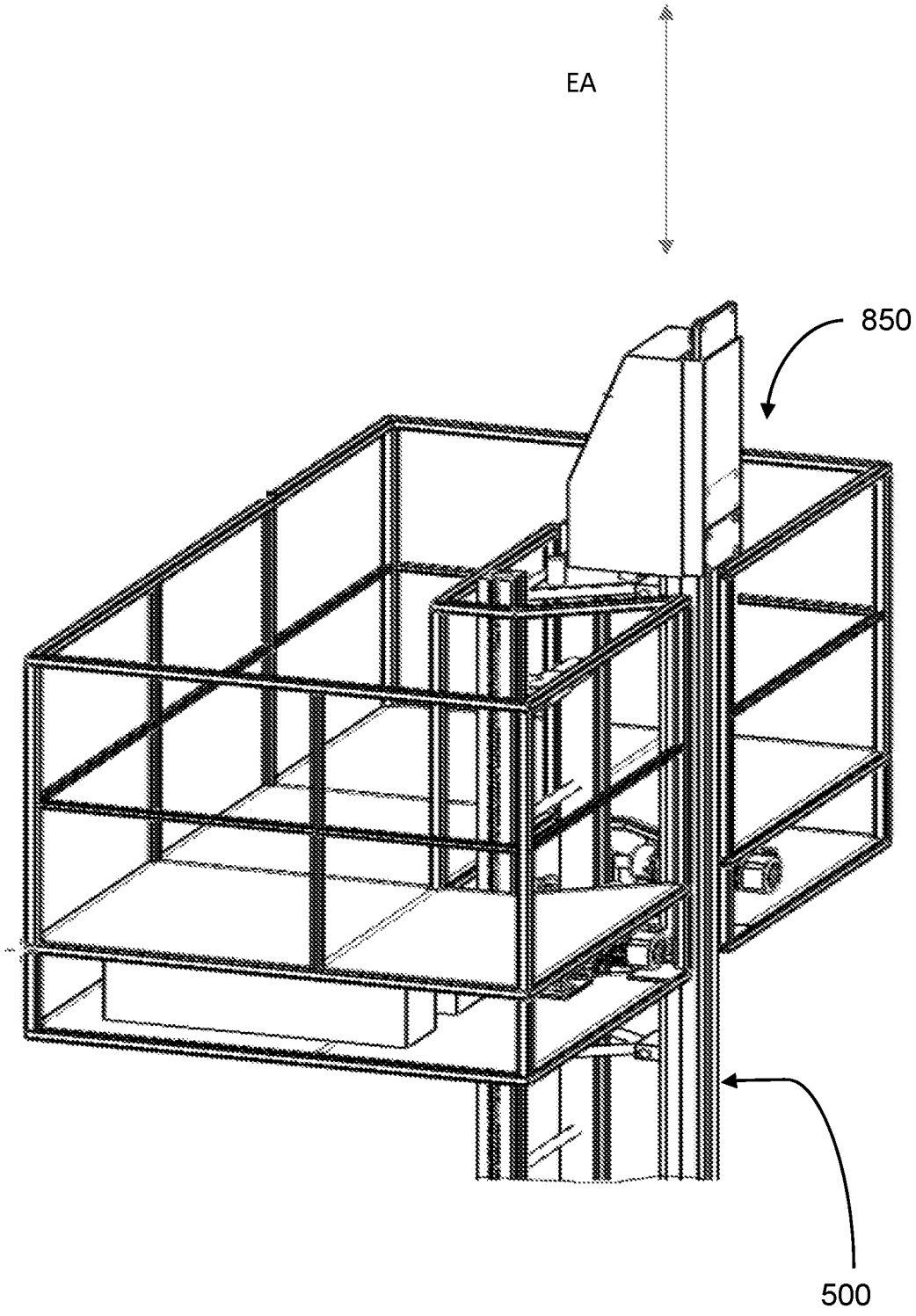

Fig. 14

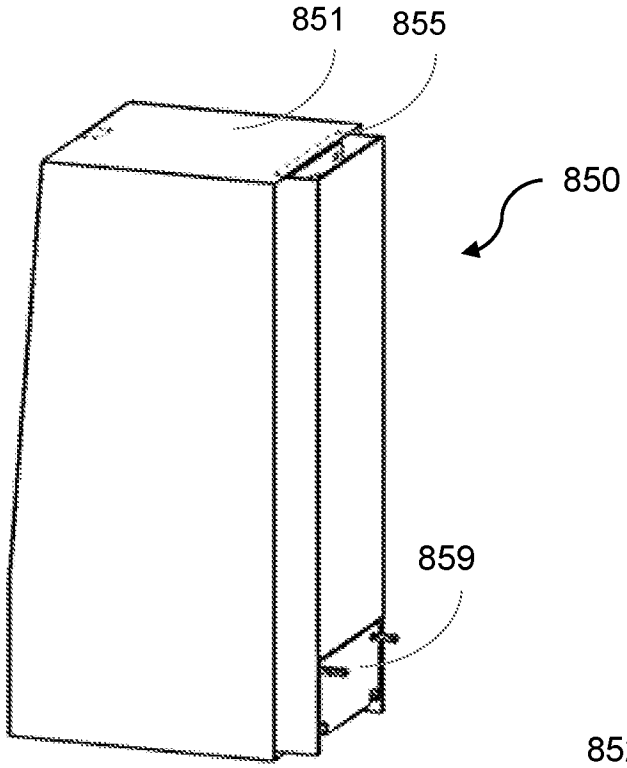

Fig. 15

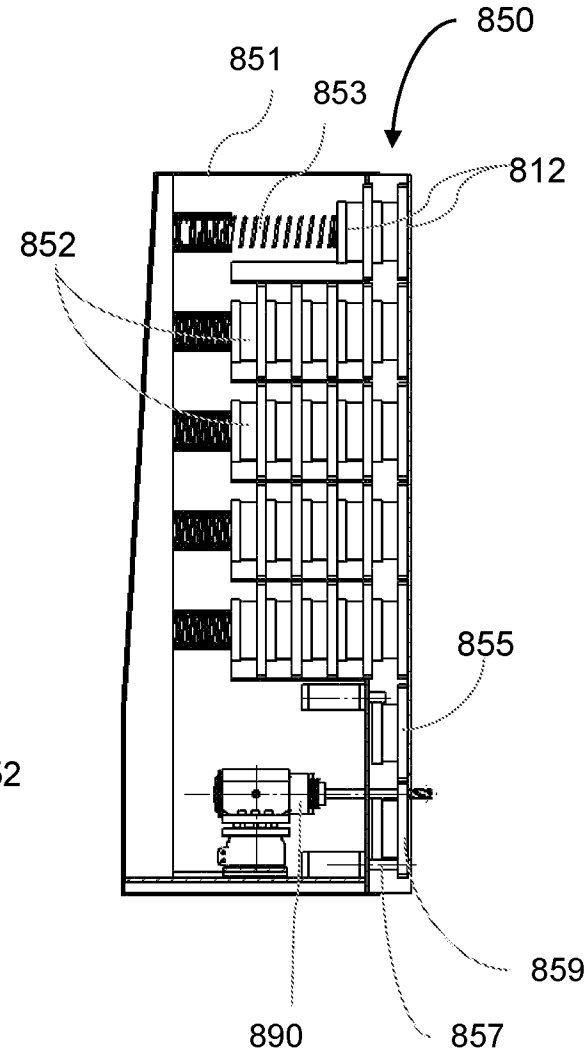

Fig. 16

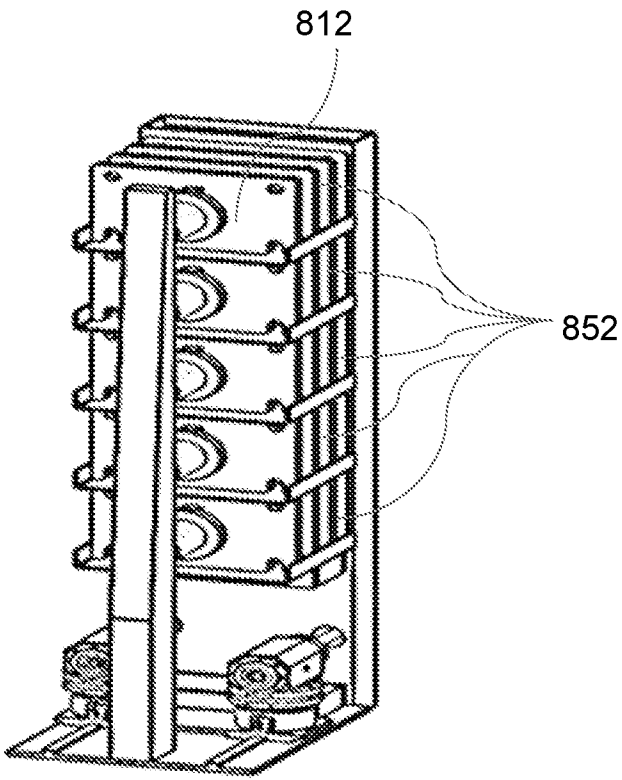

Fig. 17

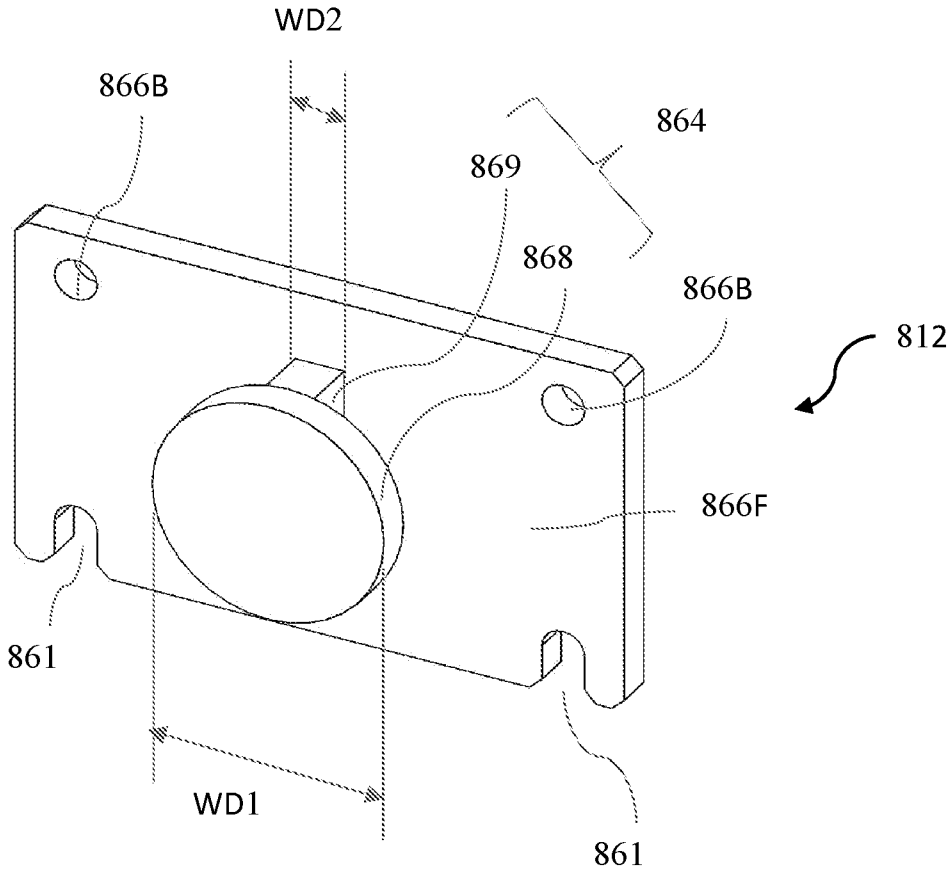

Fig. 18

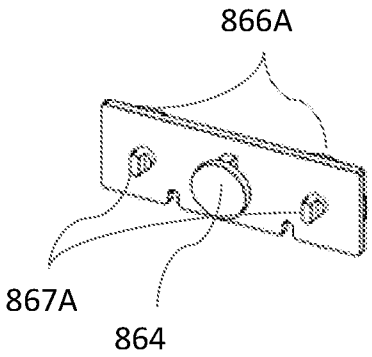

Fig. 19(a)

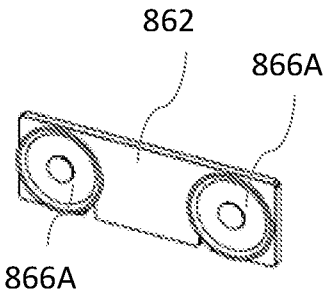

Fig. 19(b)

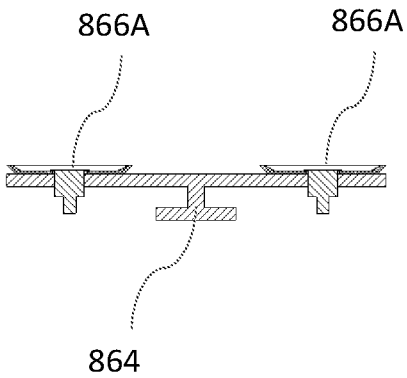

Fig. 19(c)

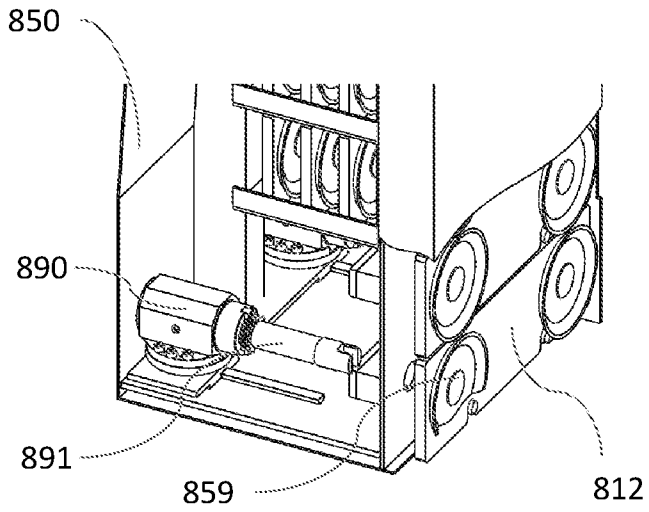

Fig. 20(a)

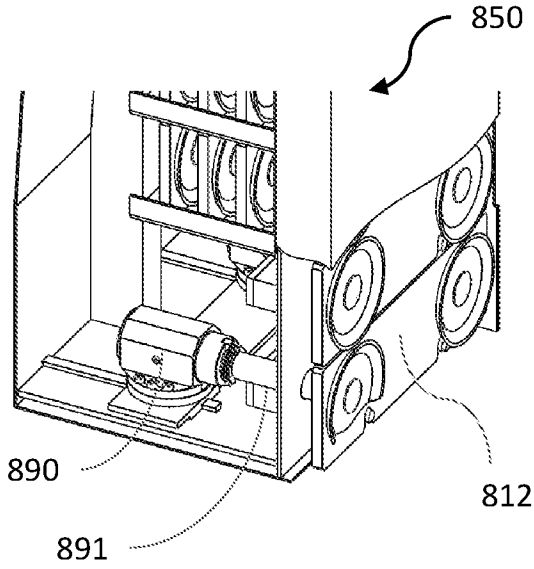

Fig. 20(b)

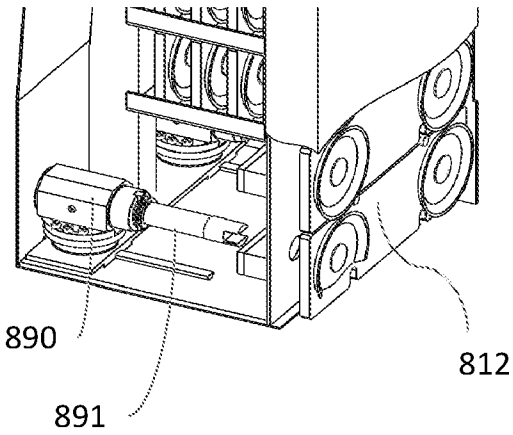

Fig. 20(c)

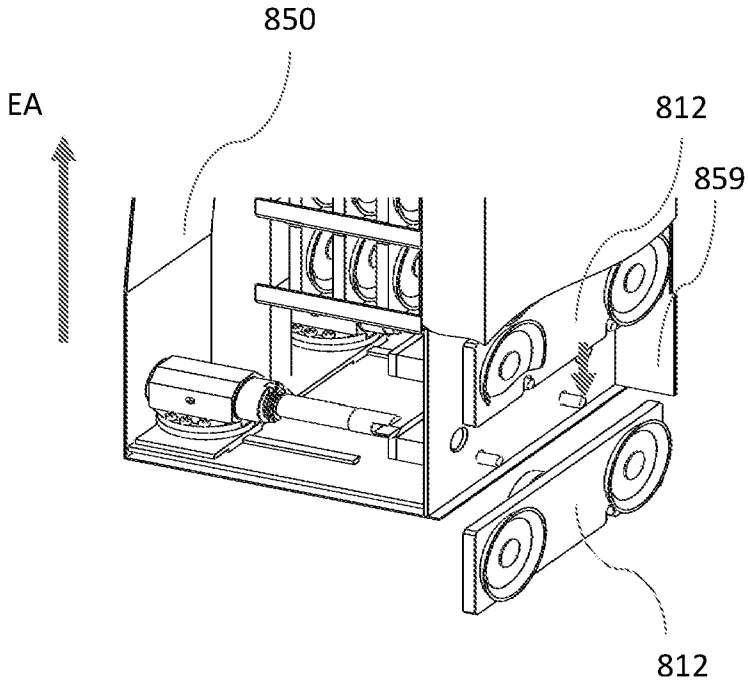

Fig. 20(d)

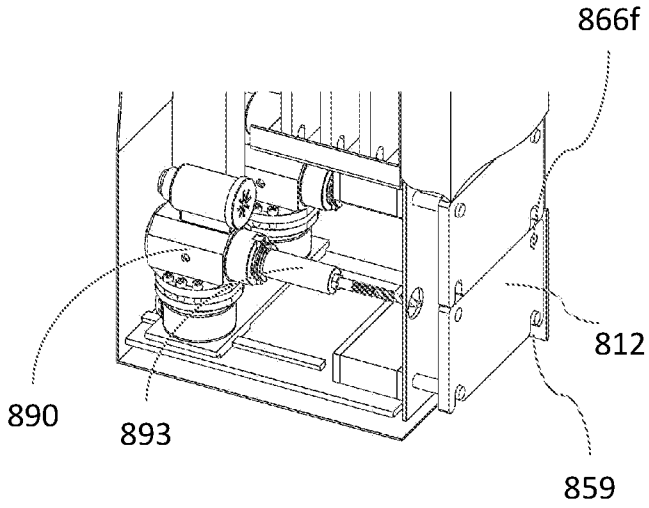

Fig. 21(a)

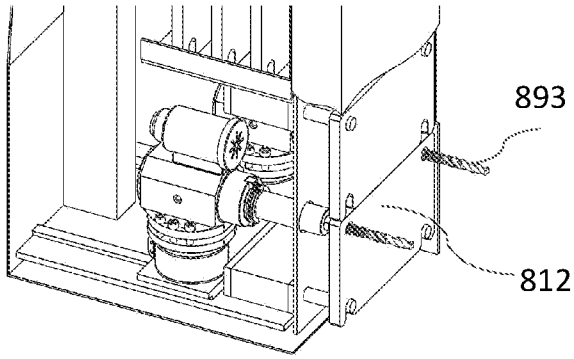

Fig. 21(b)

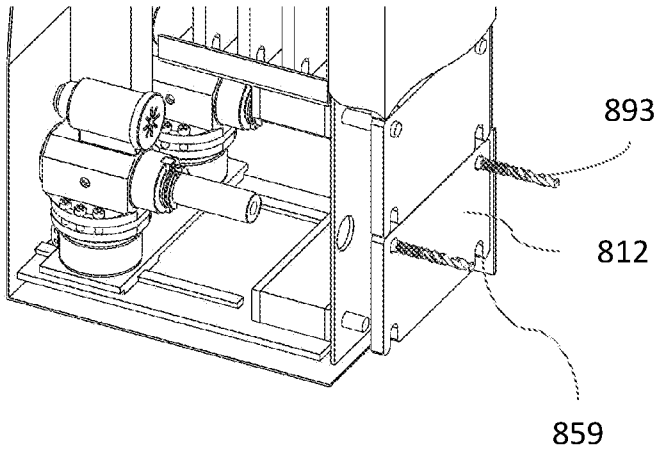

Fig. 21(c)

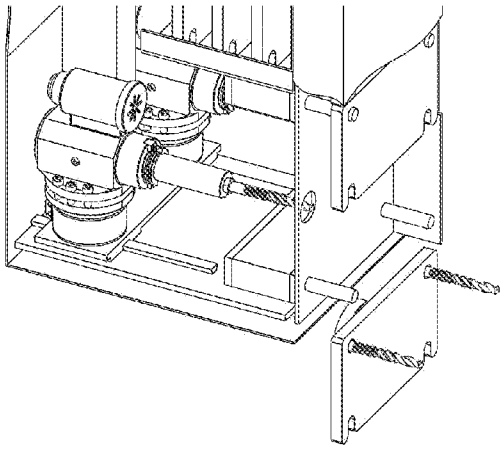

Fig. 21(d)

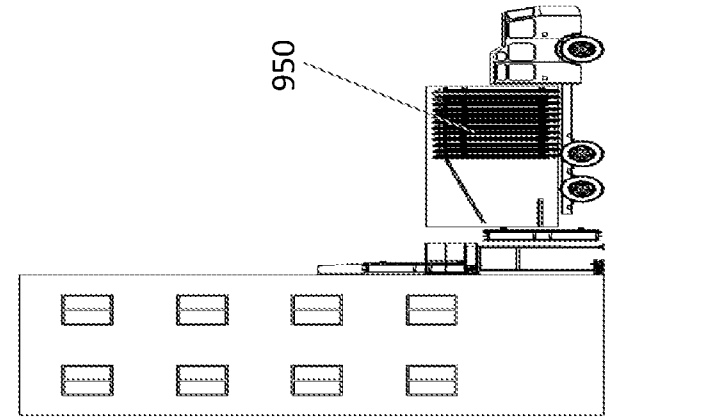

Fig.22(e)

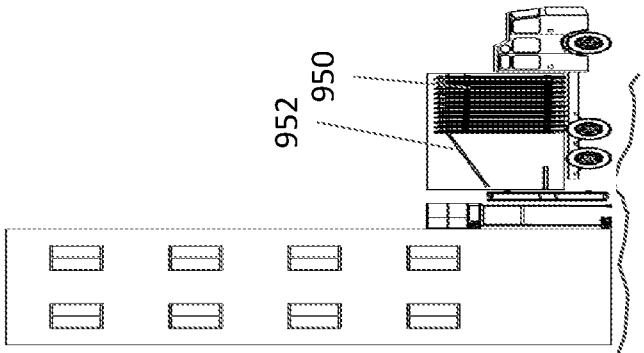

Fig. 22(d)

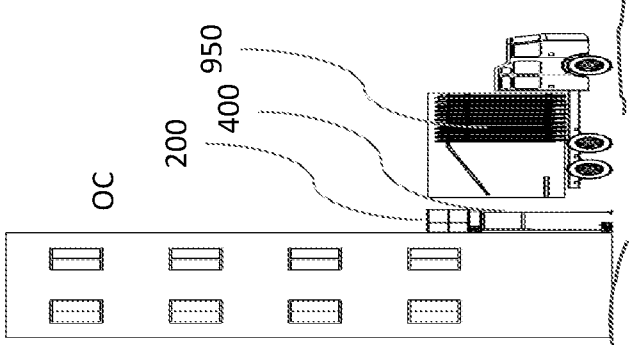

Fig. 22(c)

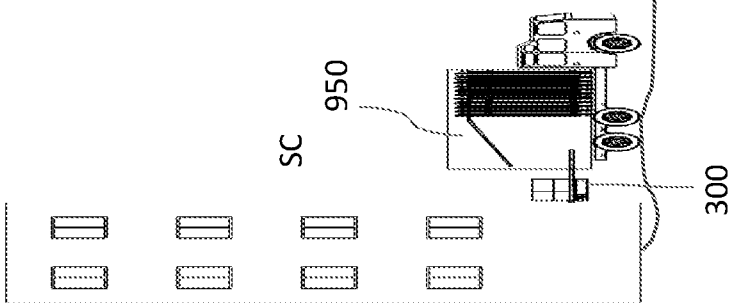

Fig. 22(b)

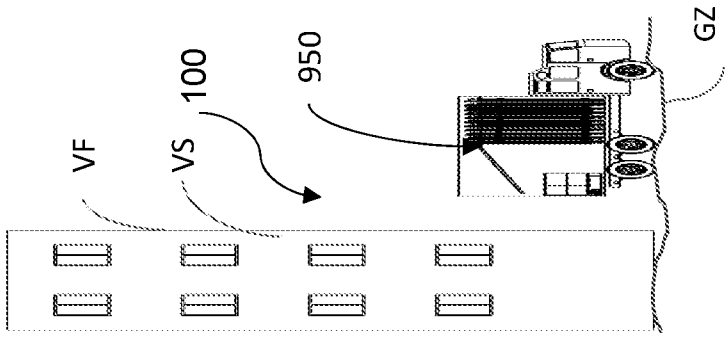

Fig. 22(a)

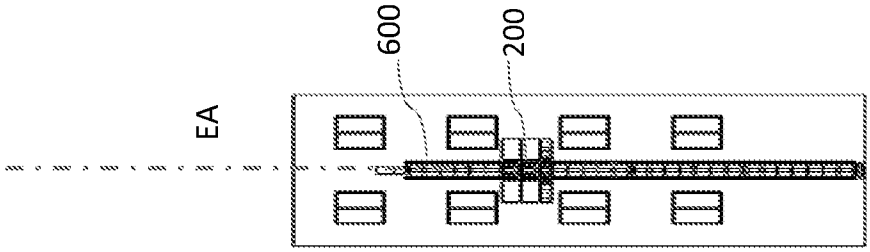

Fig. 23(e)

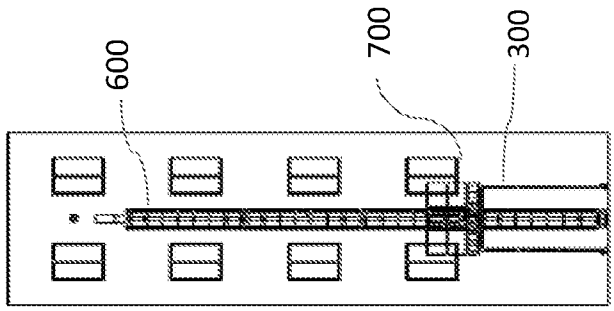

Fig. 23(d)

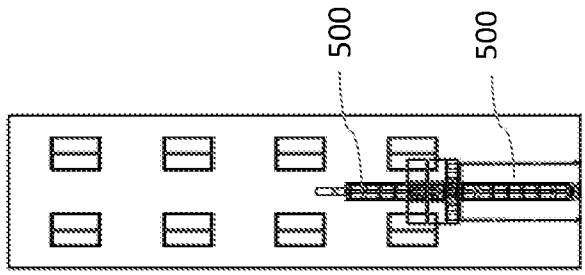

Fig. 23(c)

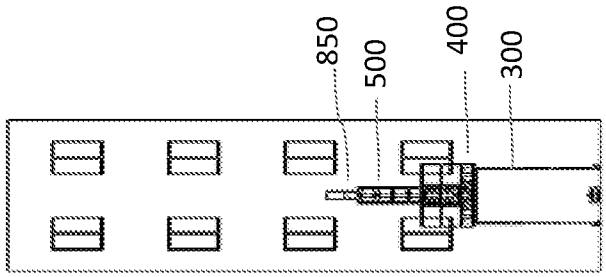

Fig. 23(b)

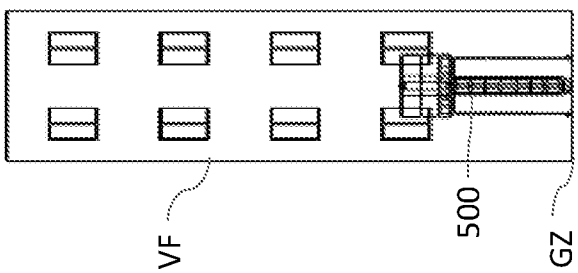

Fig. 23(a)

INTERNATIONAL SEARCH REPORT

International application No
PCT/IL2023/050412

A. CLASSIFICATION OF SUBJECT MATTER
INV. B66B9/02 B66B9/187
ADD.

According to International Patent Classification (IPC) or to both national classification and IPC

B. FIELDS SEARCHED

Minimum documentation searched (classification system followed by classification symbols)
B66B

Documentation searched other than minimum documentation to the extent that such documents are included in the fields searched

Electronic data base consulted during the international search (name of data base and, where practicable, search terms used)
EPO-Internal, WPI Data

C. DOCUMENTS CONSIDERED TO BE RELEVANT

Category*	Citation of document, with indication, where appropriate, of the relevant passages	Relevant to claim No.
X	US 2013/001012 A1 (SOLHJEM JASON M [US] ET AL) 3 January 2013 (2013-01-03) paragraphs [0040] - [0073] figures 1-13	1-50
X	EP 2 530 042 A1 (GEDA DECHENTREITER GMBH & CO KG [DE]) 5 December 2012 (2012-12-05) paragraphs [0024] - [0028] figures 1-5	1,38-43, 45
X	US 2021/362980 A1 (BARKER DONALD WADE [US] ET AL) 25 November 2021 (2021-11-25) paragraphs [0017] - [0036] figures 1-7	1,38-43, 45

☐ Further documents are listed in the continuation of Box C.

☒ See patent family annex.

* Special categories of cited documents :

"A" document defining the general state of the art which is not considered to be of particular relevance

"E" earlier application or patent but published on or after the international filing date

"L" document which may throw doubts on priority claim(s) or which is cited to establish the publication date of another citation or other special reason (as specified)

"O" document referring to an oral disclosure, use, exhibition or other means

"P" document published prior to the international filing date but later than the priority date claimed

"T" later document published after the international filing date or priority date and not in conflict with the application but cited to understand the principle or theory underlying the invention

"X" document of particular relevance;; the claimed invention cannot be considered novel or cannot be considered to involve an inventive step when the document is taken alone

"Y" document of particular relevance;; the claimed invention cannot be considered to involve an inventive step when the document is combined with one or more other such documents, such combination being obvious to a person skilled in the art

"&" document member of the same patent family

Date of the actual completion of the international search	Date of mailing of the international search report
21 June 2023	05/07/2023

Name and mailing address of the ISA/	Authorized officer
European Patent Office, P.B. 5818 Patentlaan 2 NL - 2280 HV Rijswijk Tel. (+31-70) 340-2040, Fax: (+31-70) 340-3016	Baytekin, Hüseyin

1

INTERNATIONAL SEARCH REPORT

Information on patent family members

International application No
PCT/IL2023/050412

Patent document cited in search report	Publication date	Patent family member(s)	Publication date
US 2013001012 A1	03-01-2013	AU 2012275327 A1	23-01-2014
		CA 2840631 A1	03-01-2013
		US 2013001012 A1	03-01-2013
		US 2013001013 A1	03-01-2013
		US 2014008151 A1	09-01-2014
		US 2015034417 A1	05-02-2015
		WO 2013003587 A2	03-01-2013
EP 2530042 A1	05-12-2012	DE 102011102815 A1	06-12-2012
		DK 2530042 T3	09-03-2015
		EP 2530042 A1	05-12-2012
		RU 2012120341 A	27-11-2013
		US 2013133982 A1	30-05-2013
US 2021362980 A1	25-11-2021	US 2021362980 A1	25-11-2021
		WO 2021237049 A1	25-11-2021