PCT WORLD INTELLECTUAL PROPERTY ORGANIZATION
International Bureau

INTERNATIONAL APPLICATION PUBLISHED UNDER THE PATENT COOPERATION TREATY (PCT)

(51) International Patent Classification 5 :		(11) International Publication Number:
A61B 17/60	A1	WO 94/28813
		(43) International Publication Date: 22 December 1994 (22.12.94)

(21) International Application Number: PCT/GB94/01271

(22) International Filing Date: 13 June 1994 (13.06.94)

(30) Priority Data:
08/075,733 11 June 1993 (11.06.93) US

(71) Applicant: HILLWAY SURGICAL LIMITED [GB/GB]; 49 Hillway, Highgate, London N6 6AD (GB).

(72) Inventors: CROCKARD, Hugh, Alan; 49 Hillway, Highgate, London N6 6AD (GB). MELOUL, Raphael; Codman & Shurtleff Inc., 41 Pacella Park Drive, Randolph, MA 02368 (US). YAPP, Ronald, A.; 1099 Main Street, Marshfield, MA 02050 (US).

(74) Agent: HARLAND, Linda, Jane; Reddie & Grose, 16 Theobalds Road, London WC1X 8PL (GB).

(81) Designated States: JP, European patent (AT, BE, CH, DE, DK, ES, FR, GB, GR, IE, IT, LU, MC, NL, PT, SE).

Published
With international search report.
Before the expiration of the time limit for amending the claims and to be republished in the event of the receipt of amendments.

(54) Title: SURGICAL IMPLANT

(57) Abstract

A surgical implant for spinal fixation formed by a rigid bent titanium frame (1) having wire receiving means. Spinal fixation implants are used to correct abnormal curvature of, and/or impart stability to, the spine by immobilizing a plurality of vertebrae with respect to each other. A rigid bullet shaped frame which fits neatly onto the posterior surface of the spine to embrace at least two bones is fixed in place by means of fixation wires passed around or looped through the frame and passing through holes in the bones to immobilise the embraced bones with respect to each other. The frame has a substantially rectangular cross section. An improved surgical implant results from the provision of wire receiving means (7, 8, 9) which prevent the fixation wires moving relative to the frame and the bullet shaped frame of rectangular cross section which improves the stability of a fixed implant by close conformity of the implant to the shape of the spine.

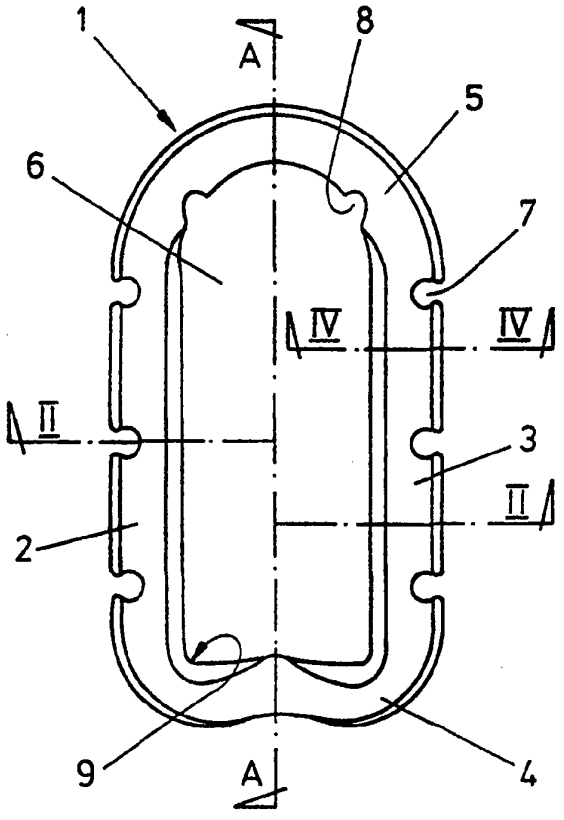

FOR THE PURPOSES OF INFORMATION ONLY

Codes used to identify States party to the PCT on the front pages of pamphlets publishing international applications under the PCT.

AT	Austria	**GB**	United Kingdom	**MR**	Mauritania
AU	Australia	**GE**	Georgia	**MW**	Malawi
BB	Barbados	**GN**	Guinea	**NE**	Niger
BE	Belgium	**GR**	Greece	**NL**	Netherlands
BF	Burkina Faso	**HU**	Hungary	**NO**	Norway
BG	Bulgaria	**IE**	Ireland	**NZ**	New Zealand
BJ	Benin	**IT**	Italy	**PL**	Poland
BR	Brazil	**JP**	Japan	**PT**	Portugal
BY	Belarus	**KE**	Kenya	**RO**	Romania
CA	Canada	**KG**	Kyrgystan	**RU**	Russian Federation
CF	Central African Republic	**KP**	Democratic People's Republic of Korea	**SD**	Sudan
CG	Congo			**SE**	Sweden
CH	Switzerland	**KR**	Republic of Korea	**SI**	Slovenia
CI	Côte d'Ivoire	**KZ**	Kazakhstan	**SK**	Slovakia
CM	Cameroon	**LI**	Liechtenstein	**SN**	Senegal
CN	China	**LK**	Sri Lanka	**TD**	Chad
CS	Czechoslovakia	**LU**	Luxembourg	**TG**	Togo
CZ	Czech Republic	**LV**	Latvia	**TJ**	Tajikistan
DE	Germany	**MC**	Monaco	**TT**	Trinidad and Tobago
DK	Denmark	**MD**	Republic of Moldova	**UA**	Ukraine
ES	Spain	**MG**	Madagascar	**US**	United States of America
FI	Finland	**ML**	Mali	**UZ**	Uzbekistan
FR	France	**MN**	Mongolia	**VN**	Viet Nam
GA	Gabon				

SURGICAL IMPLANT

This invention relates to surgical implants for spinal fixation.

Spinal fixation implants are used to correct abnormal curvature of, and/or impart stability to, the spine by immobilising a plurality of vertebrae with respect to each other. A rigid frame which fits neatly onto the posterior surface of the spine to embrace at least two adjacent vertebrae is fixed in place by means of fixation wires (or cables) passed around or looped through the frame and passed under the laminae to immobilise the embraced vertebrae with respect to each other.

One type of known spinal fixation implant comprises stainless steel or titanium rods formed into a rectangle. The fixation wires are looped around the rod to secure the rectangle to the spine. A problem with such implants is that any tensile or compressive forces parallel to the direction of the spine will cause the implant to slip relative to the fixation wires as soon as the frictional force between the wire and rod is overcome. A further problem of prior art implants is the dead space between a fitted implant and the spine arising from a lack of conformity between the contours of the cervical spine and the spinal implant.

According to the invention in a first aspect, there is provided a surgical implant for spinal fixation comprising a rigid biocompatible frame defining an aperture, the frame consisting of first and second substantially parallel frame portions connected by third and fourth frame portions extending in the same direction as each other away from a plane defined by the first and second frame portions, and at least one of the third and fourth frame portions being curved so as to define a tapered portion of relatively small width which, in use, can be fitted closely about the spine. In a preferred form, the frame defines a bullet-shaped aperture, that is, three sides of the frame, when viewed from above, define a substantially rectangular space which is extended at one end towards a point defined by either straight or curving converging frame portions.

The present invention also provides a surgical implant for spinal fixation comprising a rigid biocompatible frame defining an aperture, the frame consisting of first and second

substantially parallel frame portions connected by third and fourth frame portions, the third and fourth frame portions extending in the same direction as each other away from the plane defined by the first and second frame portions, the frame having wire receiving means for receiving wire (or cable) at at least one point on the frame and fixed relative thereto, the wire receiving means being a recess formed in one of the frame portions.

Preferably the frame is formed from titanium alloy (Ti-6Al-4V) sheet stock and has flat surfaces.

Embodiments of the present invention will now be described, by way of example, and with reference to the accompanying drawings, in which:

Figure 1 is a plan view of a surgical implant embodying the present invention;

Figure 2 is a section along line II-II of Figure 1;

Figure 3 is a side view of the implant of Figure 1;

Figure 4 is a section along line IV-IV of Figure 1;

Figure 5 illustrates one of the slots in the implant of Figure 1;

Figures 6 and 7 are plan and side views respectively of an alternative embodiment of the present invention;

Figures 8 and 9 are plan and side views respectively of a further alternative embodiment of the present invention;

Figures 10,11 and 12 are plan views of further alternative embodiments of the present invention;

Figures 13 and 14 are respective views of further alternative embodiments of the present invention;

Figure 15 is a plan view of an alternative embodiment of a surgical implant embodying the present invention;

Figure 16 is a side view of the surgical implant of Figure 15;

Figure 17 is a plan view of an alternative embodiment of the present invention;

Figure 18 is a side view of the surgical implant of Figure 17;

Figure 19 is a section along line XIX-XIX of Figures 15 or 17;

Figure 20 is a section similar to that of Figure 6 through an alternative frame construction;

Figure 21 is an end view of the surgical implants of Figure 15 and 17;

Figure 22 is an X-ray photograph taken from behind showing a surgical implant similar to that of Figure 1 in situ around the vertebrae of a patient; and

Figure 23 is an X-ray photograph taken from the side showing a surgical implant similar to that of figure 12 in situ around the vertebrae of a patient.

Referring to Figures 1 to 3, a titanium alloy frame 1 having first and second substantially parallel frame portions 2,3 respectively, connected by first and second bent shorter end frame portions 4,5 respectively, defines an aperture 6 for receiving projecting spinal elements. The frame 1 has slots 7 and grooves 8 for receiving fixation wires or cables.

The frame 1 is formed from titanium alloy (Ti-6Al-4V) sheet stock. The frame portions 2,3,4,5 are each approximately 0.35 inches (0.9 cm) wide and 0.125 inches (0.4 cm) thick. All the frame edges are either chamfered or rounded (see Figure 4). Referring to Figure 1, the first frame end portion 4 curves slightly into the aperture 6 defining wire seats 9, and the second frame end portion 5 is semi-circular. The frame 1 is approximately 2.35 inches (6 cm) in length from the top of the second end portion 5 to the bottom of the first end portion 4 with the second end portion 5 being defined by a circle of approximately 0.72 inches (1.83 cm) radius. The aperture 6 is approximately 0.8 inches (2 cm) wide.

The parallel frame portions 2,3 each have three slots 7 in the frame edge 11 remote from the aperture 6. The slots 7 are spaced approximately 0.55 inches (1.4 cm) apart on each parallel frame portion 2,3 with the slots closest to the second end portion 5 being approximately 0.72 inches (1.83cm) from the top of the second end portion 5. Referring to Figure 5, each slot 7 has its centre line substantially orthogonal to the frame edge 11 remote from the frame aperture 6 and is defined by an opening 16 0.08 inches (0.2cm) wide in the frame edge 11 which communicates with a cylindrical hole 17 0.055 (0.14 cm) inches in radius having its centre 0.065 inches (0.165 cm) from the frame edge 11.

The second end portion 5 has two grooves of semi-circular section in the frame edge 12 adjacent to the frame aperture 6. Each groove 8 is defined by a circle approximately 0.055 inches

(0.14 cm) in radius having its centre on the frame edge 12 adjacent the frame aperture 6 approximately 0.41 inches (1.04 cm) below the top of the second end portion 5.

The middle section 10 of each of the end portions 4,5 bends through an angle of approximately 100° (preferably 102°) as shown in Figure 2, and the parallel frame portions 2,3 of the frame 1 curve as shown in Figure 3 so as to accomodate lordosis (or kyphosis) in the spine. The lordotic curve of frame 1 is defined by an arc of a circle, the radius of the circle being in the range 5 to 7 inches (13.2 to 17.8 cm). Preferably, the frame 1 of length 2.35 inches (6 cm) is available in three different lordotic curvatures: flat, arc of a circle of 5 inches (13.2 cm) radius and arc of a circle of 7 inches (17.8 cm) radius.

In use, the titanium alloy frame 1 is placed over the spinous processes on the lamina with the substantially parallel frame portions 2,3 lying substantially parallel to the spine axis with vertebrae elements (the spinous processes) being received in the frame aperture 6. The vertebrae received within the frame 1 are immobilised with respect to each other and the frame 1 by fixation wires or cables looped around the frame 1 and around the lamina of adjacent vertebrae. Fixation wires or cables are looped through the slots 7, the grooves 8 and wire seats 9.

The prior art spinal implants are smooth rectangular frames formed from metal rods. Whereas in the prior art spinal implants the looped fixation wires or cables are prone to slip parallel to the frame portion around which they are looped, in the frame 1 of the present invention the fixation wires or cables are secured within a slot 7 or groove 8 and can therefore resist forces parallel to the frame portion around which they are looped. The frame 1 of the present invention can therefore be rigidly anchored to the spine.

As will be seen from the drawings, the preferred form of frame is symmetrical about a central plane along the longitudinal axis of the device (A-A in Figure 3), having long portions (2,3) which are substantially parallel (when viewed from above) to the longitudinal axis A-A, and interconnecting portions at either end. The interconnecting portions at each end are asymmetrical about an axis B-B, see Figure 3; one a continuous tapering arc connecting the long sides (2,3) to define a converging region of somewhat 'pointed' shape, and the other a substantially straight portion at

approximately ninety degrees to the long portions. As a whole, when viewed as in Figure 1, the frame defines an aperture similar in shape to a bullet. When viewed from the side, see Figure 3, the long sides of the loop formed by the frame are coplanar and shaped to form a curve which roughly approximates the curve of the spine. In end view, Figure 2, the interconnecting portions (4,5) extend out of the plane of the long sides, defining a rise at either end, having its apex in the plane A-A shown in Figure 1.

The bullet shaped implant 1 of rectangular cross-section has superior conformance, at the upper and lower ends of the cervical spine, to the contours of the cervical spine in comparison to the prior art rod cross-sectional rectangular frames. The bullet shaped frame 1 can be used pointing to the head in the lower cervical spine, while at the craniovertebral junction, its reversal, to allow the substantially straight end frame portion 4 to nestle against the occiput provides an excellent fixation for the craniovertebral junction. The slots 7 on the frame 1 about every 1.5 cm are compatible with Titanium cable and, by fixing sublaminar cables through the slots 7 provide an extremely firm fixation far in excess to that provided by the conventional prior art rectangular frame arrangement.

Figures 6 and 7 illustrate a titanium frame 18 similar to that of Figures 1 to 4 but having substantially parallel frame portions 19,20 of different dimensions. The frame 18 is approximately 1.57 inches (4 cm) in length from the top of the second end portion 5 to the bottom of the first end portion 4. The substantially parallel frame portions 19,20 each have two slots 7 in the frame edge 11 remote from the frame aperture 6, with the slots 7 being spaced approximately 0.55 inches (1.4 cm) apart and the slot closest to the second end portion 5 being approximately 0.6 inches (1.5 cm) from the top of the second end portion 5. Preferably, the frame 18 of Figures 6 and 7 is available in three different lordotic curvatures; flat, arc of a circle of 4 inches (10.2 cm) radius and arc of a circle of 7 inches (17.8 cm) radius.

Figures 8 and 9 illustrate a titanium frame 26 similar to those of Figures 1 to 7 but having substantially parallel frame portions 27,28 of different dimensions. The frame 26 is approximately 3.15 inches (8 cm) in length from the top of the second end portion 5 to the bottom of the first end portion 4.

The substantially parallel frame portions 27,28 each have four slots 7 in the frame edge 11 remote from the frame aperture 6, with the slots 7 being spaced approximately 0.55 inches (1.4 cm) apart and the slots closest to the second end portion 5 being approximately 0.86 inches (2.18 cm) from the top of the second end portion 5. Preferably, the frame 26 of Figures 8 and 9 is formed into frames of three different lordotic curvatures; flat, arc of a circle of 5 inches (13.2 cm) radius and arc of a circle of 7 inches (17.8 cm) radius.

Figures 10 to 14 illustrate further alternative embodiments of the present invention.

Figures 10, 11 and 12 illustrate titanium frames 41,42,43 similar to frames 26,18,1 of figures 8,6 and 1 respectively but having slots 44 in the frame end portions 4,5. The frame end portions 4,5 each have two slots 44 in the frame edge 11 remote from the frame aperture 6 in addition to the slots 7 in the parallel frame portions 2,3. The embodiments of figures 10,11 and 12 do not have grooves in the frame edge 12 adjacent the frame aperture.

Figures 13 and 14 illustrate two alternative types of frame end portion 50,51.

Referring to figure 13, a titanium frame 52 is provided with U-shaped frame end portions 50 connecting the parallel frame portions 2,3.

Referring to figure 14, a titanium frame 53 is provided with bent end frame portions 51 having a shallow bend 54.

Referring to figures 15 and 16, an alternative titanium alloy frame 71 having first and second substantially parallel frame portions 72,73 respectively, connected by first and second transverse bent (see figure 19) shorter end frame portions 74,75 respectively, defines a substantially bullet-shaped aperture 76 (see figure 15) for receiving projecting spinal elements.

The frame 71 is formed from titanium alloy (Ti-6Al-4V) sheet stock and has similar dimensions to those of the frames described above. The frame portions have a rectangular cross-section with chamfered corners (see figure 20). The frame portions may alternatively be of rectangular cross-section with rounded corners (see figure 21).

Referring to figure 15, the first frame end portion 74 curves slightly into the aperture (but is otherwise substantially

straight) and the second frame end portion is substantially semi-circular (i.e. bent).

An alternative construction of a frame similar to that of figures 15 and 16 is shown in figures 17 and 18. The parallel frame portions 82,83 of the frame 81 curve as shown in figure 18 so as to accommodate curvature of the spine (i.e. lordosis or kyphosis). In other respects the construction of the frame 81 of figures 17 and 18 is similar to that of the frame 71 of figures 15 and 16.

As discussed above for the frame of figure 1 the bullet shaped frames 71,81 have superior conformance to the contours of the spine in comparison to the prior art spinal implants. The "tented" implant with a bullet shaped aperture has been found to fit more closely to the spine and hence reduces the dead space between the spine and the fixed implant. This is illustrated in Figures 22 and 23 which are X-ray photographs taken of surgical implants of the kind described above in situ in patients with problems in the cervical spine. Figure 23, in particular, shows how the curvature of the implant mimics that of the spinal column so as to permit the implant to be fitted more closely, and ,hence, more securely, around the vertebrae.

The bullet shaped frame also leads to greater stability of the fixed implant as a result of an increased contact area between the fixed frame and bone. Using a frame of rectangular cross-section as described above leads to a further increased frame/bone contact area and hence to still greater stability. The generally rectangular cross-section provides more contact with the bony elements of the spine that the traditional prior art circular cross-section.

A frame having the combination of both a bullet shape and with frame portions of rectangular cross-section is the most effective and stable implant construction.

The surgical implants illustrated allow one to rigidly anchor the surgical implant to the spine and prevent relative movement of the implant and fixation wires or cables. It will be appreciated that various modifications may be made for example in the slot distribution and dimensions, without departing from the idea of the present invention.

CLAIMS:

1. A surgical implant for spinal fixation comprising a rigid biocompatible frame defining an aperture, the frame consisting of first and second substantially parallel frame portions connected by third and fourth frame portions extending in the same direction as each other away from a plane defined by the first and second frame portions, and at least one of the third and fourth frame portions being curved so as to define a tapered portion of relatively small width which, in use, can be fitted closely about the spine.

2. A surgical implant according to claim 1, wherein the third frame portion is curved and the fourth frame portion is substantially perpendicular to the parallel frame portions so as to define a substantially bullet shaped frame aperture.

3. A surgical implant for spinal fixation comprising a rigid biocompatible frame defining an aperture, the frame consisting of first and second substantially parallel frame portions connected by third and fourth frame portions, the third and fourth frame portions extending in the same direction as each other away from the plane defined by the first and second frame portions, the frame having wire receiving means for receiving wire at at least one point on the frame and fixed relative thereto, the wire receiving means being a recess formed in one of the frame portions.

4. A surgical implant according to claim 3, wherein the frame has at least one recess opening into the frame aperture.

5. A surgical implant according to claims 3 or 4, wherein the frame has at least one recess extending from the edge of the frame remote from the frame aperture.

6. A surgical implant according to any of the preceding claims, wherein the frame portions each have a substantially rectangular cross section.

7. A surgical implant for spinal fixation comprising a rigid biocompatible frame defining an aperture, the frame consisting of first and second substantially parallel frame portion connected by third and fourth frame portions extending in the same direction as each other away from a plane defined by the first and second frame portions, the frame portions have a substantially rectangular cross-section.

8. A surgical implant according to claim 6 or claim 7, wherein the edges of the frame portions are chamfered.

9. A surgical implant according to any of claims 3 to 8, wherein the third frame portion is curved to define a substantially bullet shaped frame aperture.

10. A surgical implant according to any of the preceding claims, wherein the fourth frame portion forms a shallow curve with the middle section of the fourth frame portion extending into the frame aperture.

11. A surgical implant according to any of the preceding claims, wherein the first and second frame portions are curved so as to match the curvature of a portion of the spine.

12. A surgical implant according to any of the preceding claims wherein the first and second frame portions are substantially straight.

13. A surgical implant according to any of the preceding claims, wherein the frame is formed from a titanium alloy.

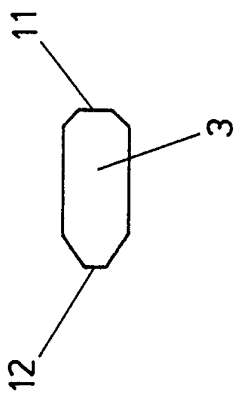

FIG. 4

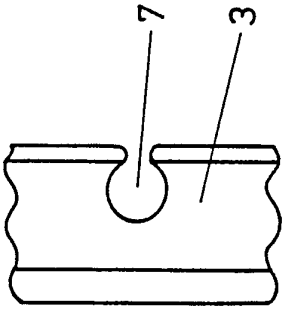

FIG. 5

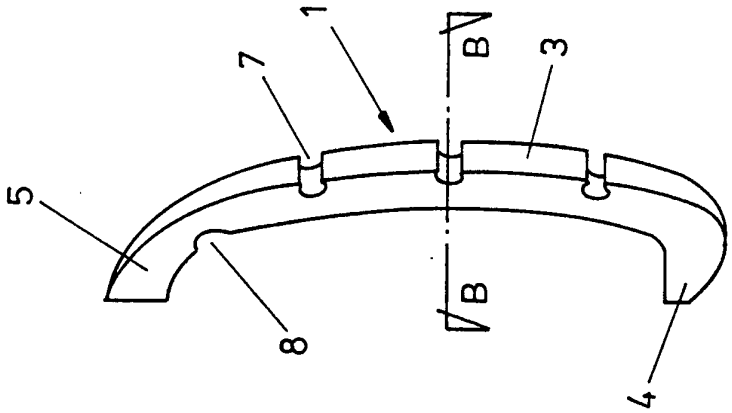

FIG. 3

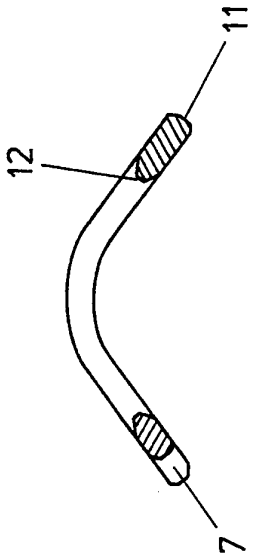

FIG. 2

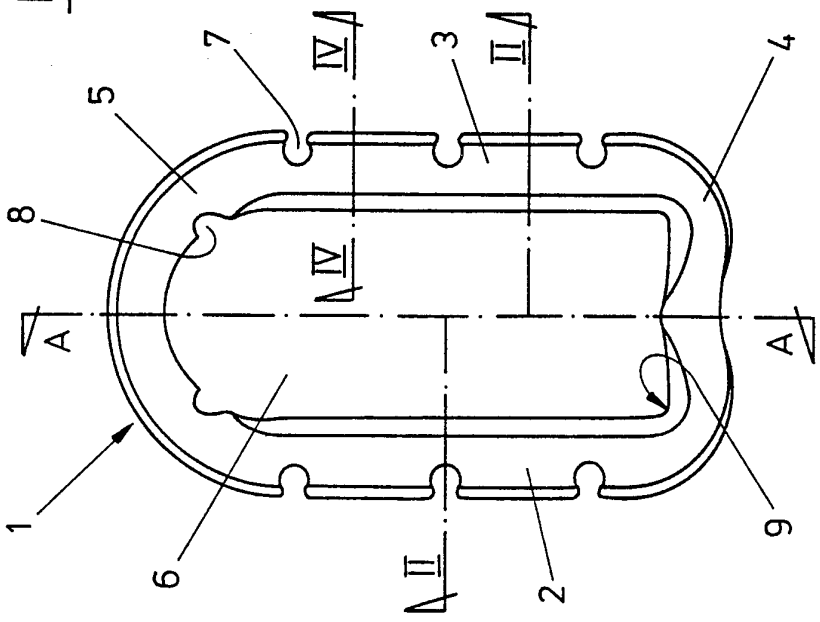

FIG. 1

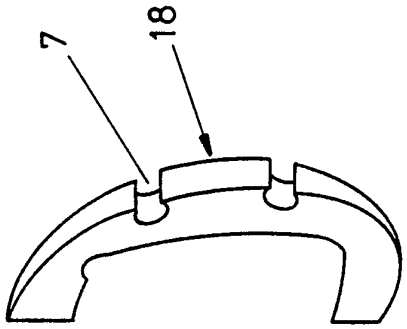

FIG. 7

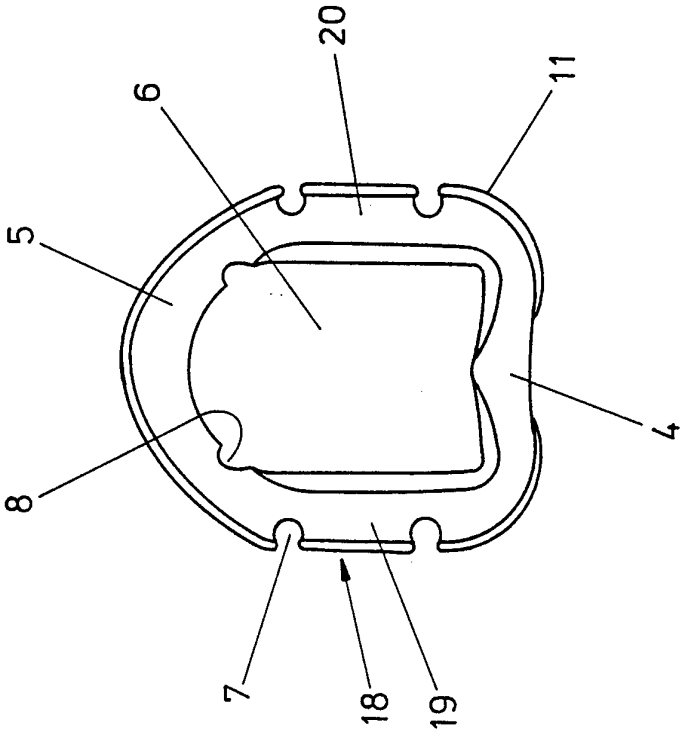

FIG. 6

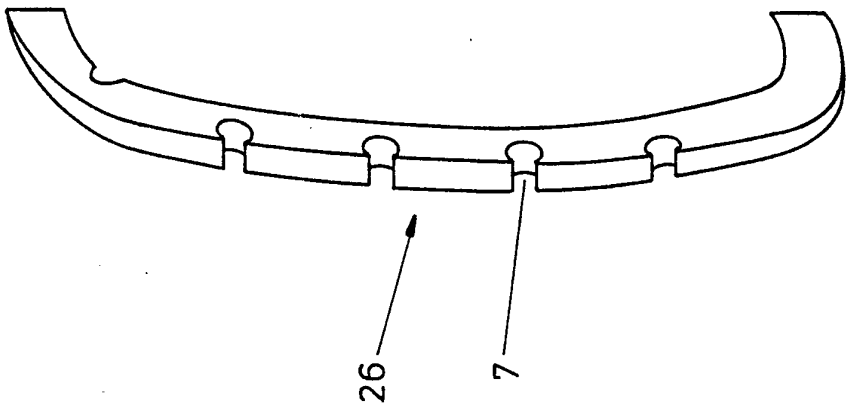

FIG. 9

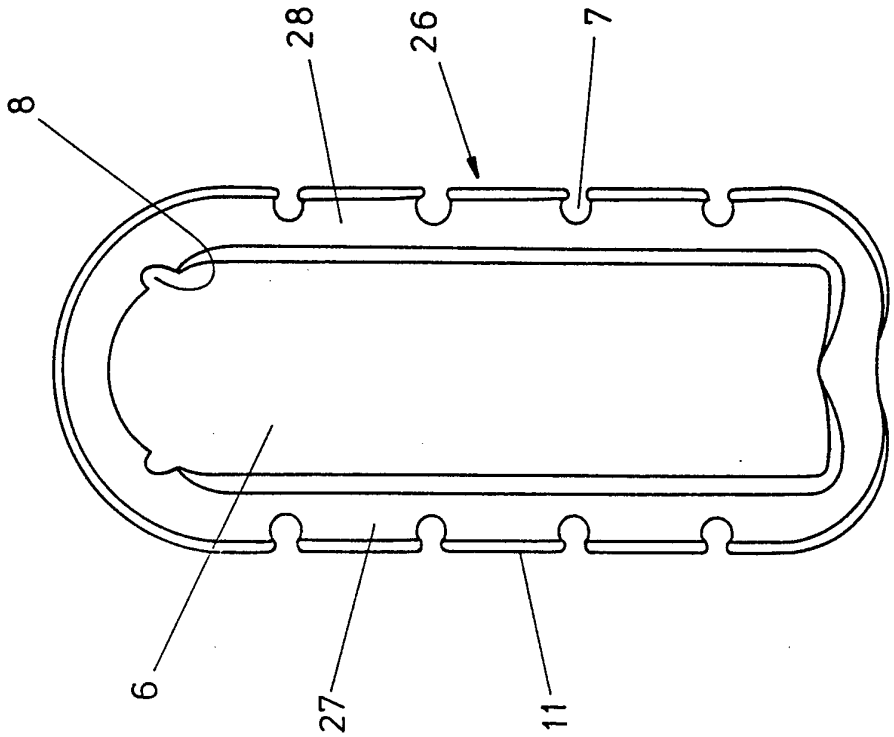

FIG. 8

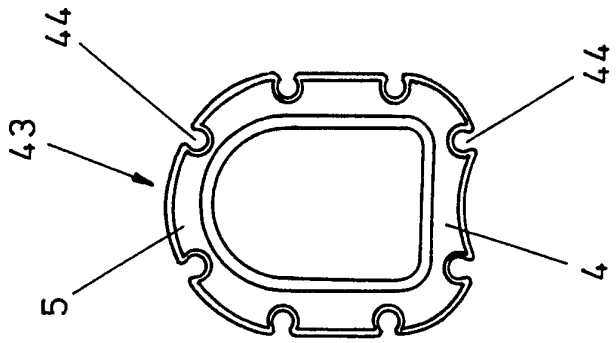

FIG. 12

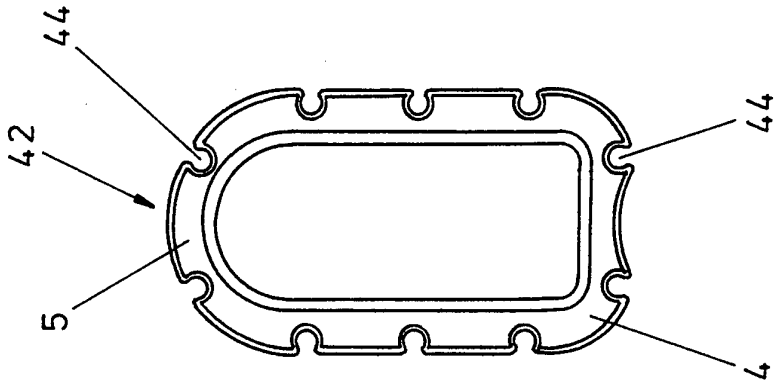

FIG. 11

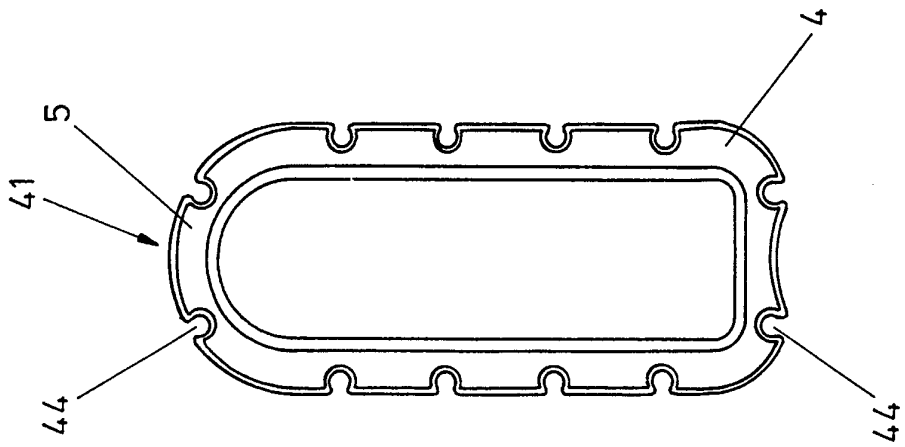

FIG. 10

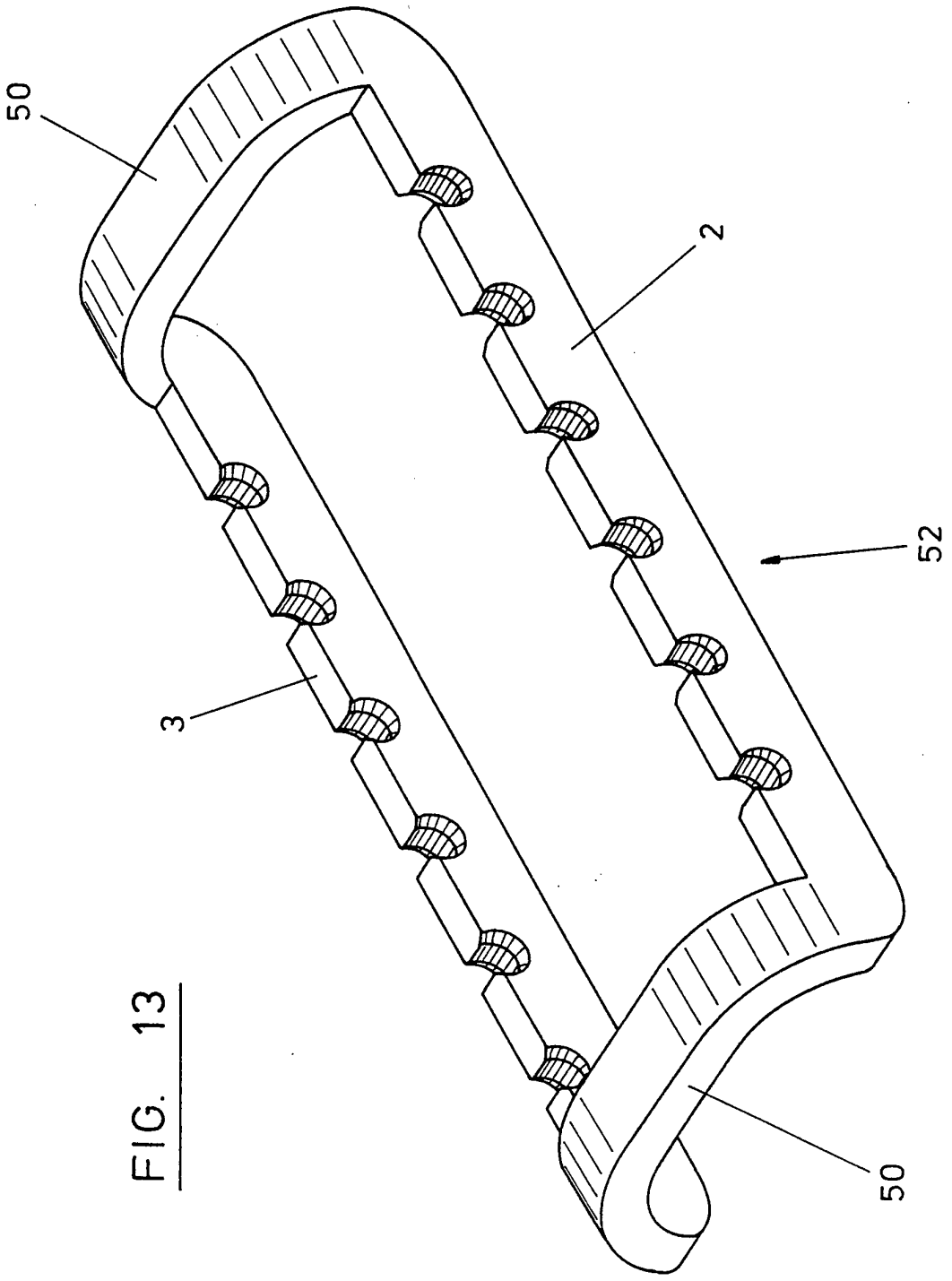

FIG. 13

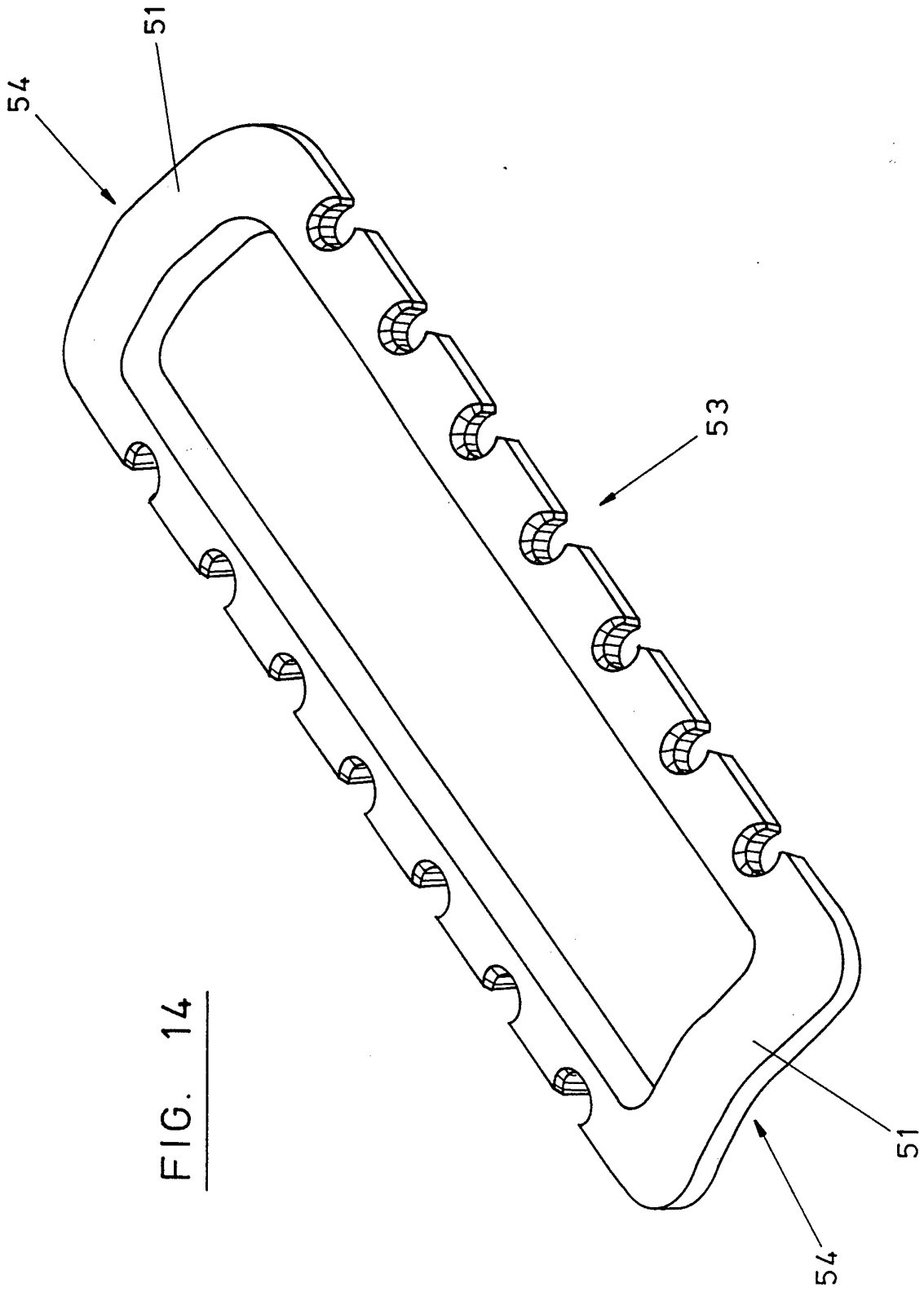

FIG. 14

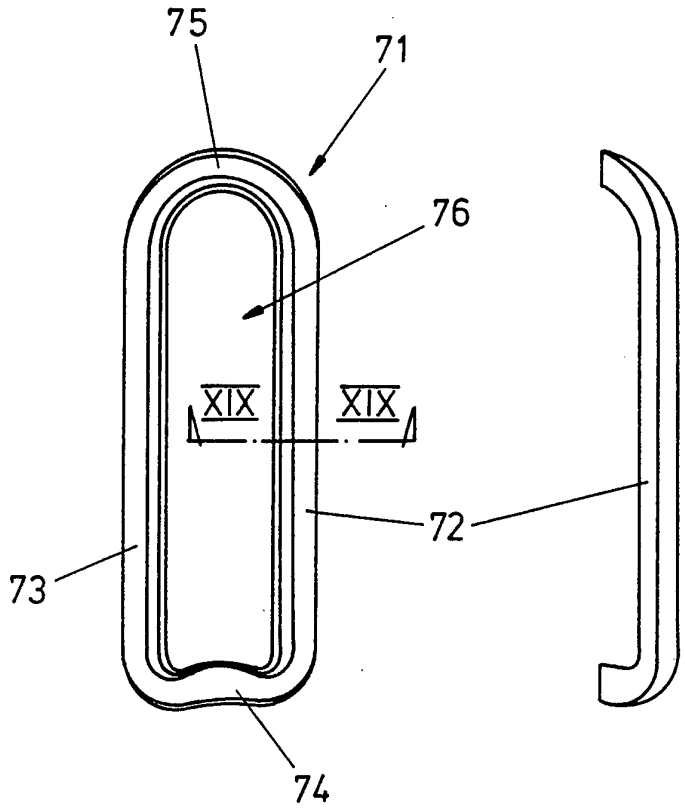

FIG. 15

FIG. 16

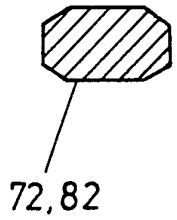

FIG. 19



FIG. 21

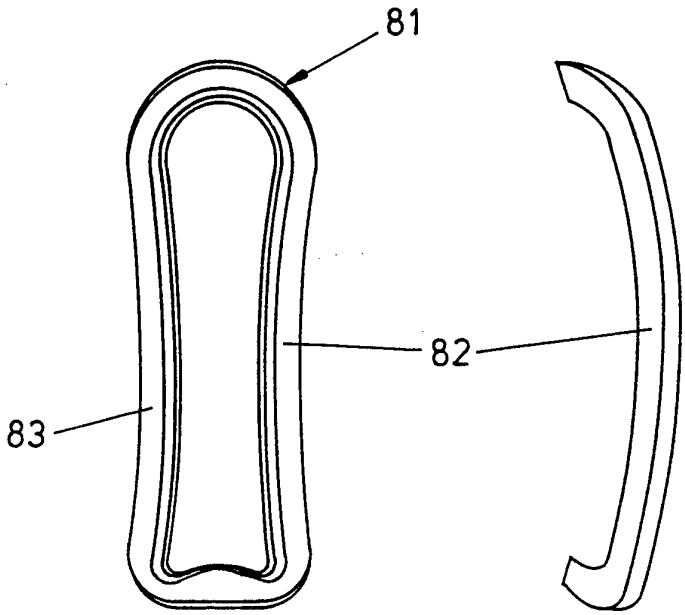

FIG. 17

FIG. 18

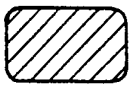

FIG. 20

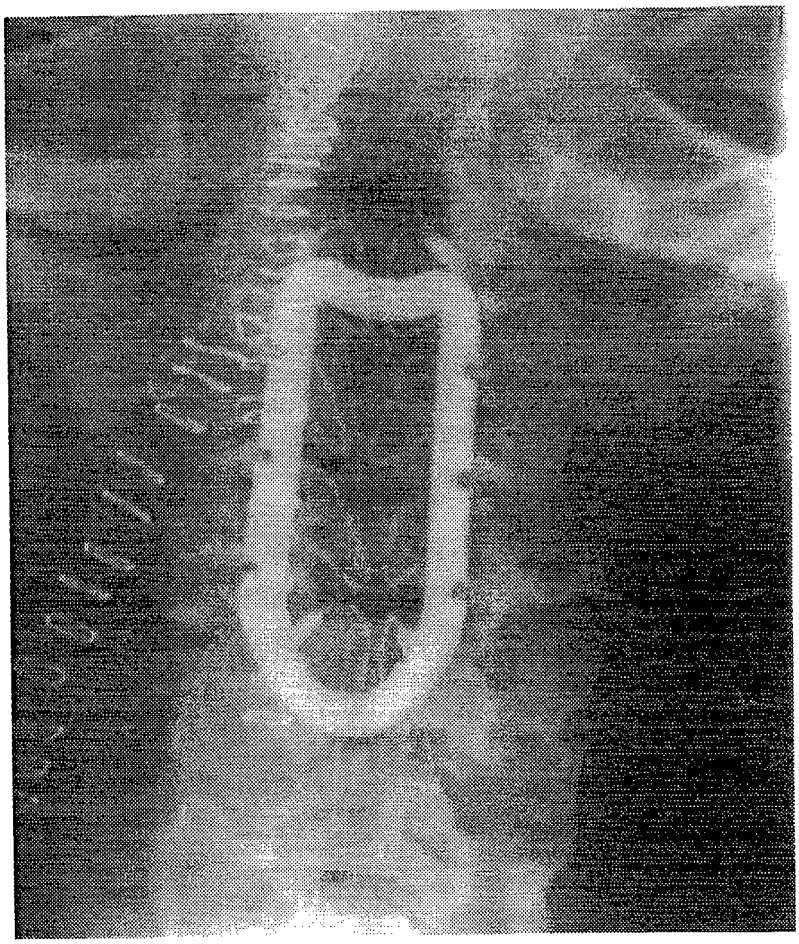

FIGURE 22



FIGURE 23

INTERNATIONAL SEARCH REPORT

Inte. onal Application No
PCT/GB 94/01271

A. CLASSIFICATION OF SUBJECT MATTER
IPC 5 A61B17/60

According to International Patent Classification (IPC) or to both national classification and IPC

B. FIELDS SEARCHED

Minimum documentation searched (classification system followed by classification symbols)
IPC 5 A61B

Documentation searched other than minimum documentation to the extent that such documents are included in the fields searched

Electronic data base consulted during the international search (name of data base and, where practical, search terms used)

C. DOCUMENTS CONSIDERED TO BE RELEVANT

Category *	Citation of document, with indication, where appropriate, of the relevant passages	Relevant to claim No.
X Y A	EP,A,0 146 347 (SURGICRAFT LTD) 26 June 1985 see page 7, line 1; figures 1-4,7	1,3,5 6 13
X	FR,A,2 656 214 (D. BAULNY) 28 June 1991 see figures 1,9	1,11
X Y	WO,A,90 04948 (SURGICRAFT LTD) 17 May 1990 see figure 9	1 2
X Y	US,A,5 133 716 (CODESPI CORP.) 28 July 1992 see column 6, line 54 - line 59	1,6-8, 12,13 6

-/--

[X] Further documents are listed in the continuation of box C.

[X] Patent family members are listed in annex.

* Special categories of cited documents :

"A" document defining the general state of the art which is not considered to be of particular relevance

"E" earlier document but published on or after the international filing date

"L" document which may throw doubts on priority claim(s) or which is cited to establish the publication date of another citation or other special reason (as specified)

"O" document referring to an oral disclosure, use, exhibition or other means

"P" document published prior to the international filing date but later than the priority date claimed

"T" later document published after the international filing date or priority date and not in conflict with the application but cited to understand the principle or theory underlying the invention

"X" document of particular relevance; the claimed invention cannot be considered novel or cannot be considered to involve an inventive step when the document is taken alone

"Y" document of particular relevance; the claimed invention cannot be considered to involve an inventive step when the document is combined with one or more other such documents, such combination being obvious to a person skilled in the art.

"&" document member of the same patent family

2

Date of the actual completion of the international search	Date of mailing of the international search report
26 September 1994	20. 10. 94

Name and mailing address of the ISA	Authorized officer
European Patent Office, P.B. 5818 Patentlaan 2 NL - 2280 HV Rijswijk Tel. (+31-70) 340-2040, Tx. 31 651 epo nl, Fax: (+31-70) 340-3016	Gérard, B

Form PCT/ISA/210 (second sheet) (July 1992)

C.(Continuation) DOCUMENTS CONSIDERED TO BE RELEVANT

Category °	Citation of document, with indication, where appropriate, of the relevant passages	Relevant to claim No.
X Y	WO,A,89 08431 (CODESPI CORP.) 21 September 1989 see page 4, line 3 - line 6 see page 5, line 1 - line 9	1,7,8, 10,12,13 9,11
Y	US,A,4 573 454 (G. A. HOFFMAN) 4 March 1986 see figures 1,2	2,9,11
A	US,A,4 604 995 (D. C. STEPHENS) 12 August 1986 see figures 1,3	2,9,11
A	WO,A,90 04366 (F. R. ASTUDILLO LEY) 3 May 1990 see page 5, line 15 - line 21	3,13

2

INTERNATIONAL SEARCH REPORT

information on patent family members

Inter nal Application No
PCT/GB 94/01271

Patent document cited in search report	Publication date	Patent family member(s)		Publication date
EP-A-0146347	26-06-85	GB-A,B	2151928	31-07-85
		US-A-	4686970	18-08-87
FR-A-2656214	28-06-91	NONE		
WO-A-9004948	17-05-90	AT-T-	106220	15-06-94
		AU-B-	625616	16-07-92
		AU-A-	4507689	28-05-90
		CA-A-	2002174	04-05-90
		DE-D-	68915747	07-07-94
		EP-A-	0399011	28-11-90
		JP-B-	6000128	05-01-94
		JP-T-	3503496	08-08-91
US-A-5133716	28-07-92	NONE		
WO-A-8908431	21-09-89	US-A-	4875471	24-10-89
		AU-A-	2804189	05-10-89
US-A-4573454	04-03-86	NONE		
US-A-4604995	12-08-86	NONE		
WO-A-9004366	03-05-90	SE-B-	462137	14-05-90
		AU-A-	4420089	14-05-90
		SE-A-	8803706	19-04-90
		US-A-	5139498	18-08-92