June 21, 1932. B. D. FEILD ET AL 1,863,975

ELECTRIC BUZZER, INTERRUPTER, AND LIKE VIBRATORY DEVICE

Filed Nov. 23, 1929 2 Sheets-Sheet 1

Fig. 1.

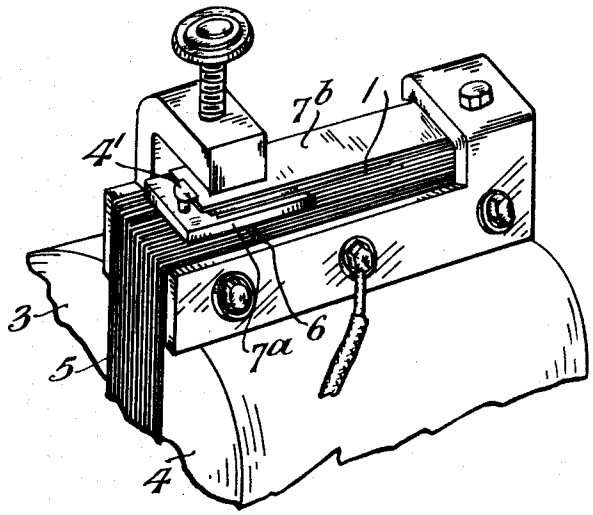

Fig. 2.

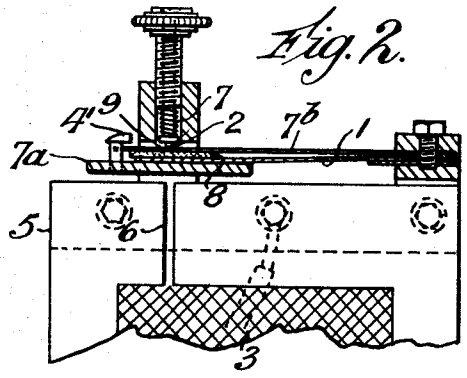

Inventors
B. D. Feild &
T. C. Standbrook
By their Attorney,
Baldwin & Wright

June 21, 1932. B. D. FEILD ET AL 1,863,975

ELECTRIC BUZZER, INTERRUPTER, AND LIKE VIBRATORY DEVICE

Filed Nov. 23, 1929 2 Sheets-Sheet 2

Fig. 3.

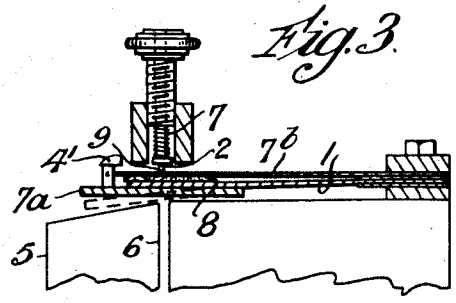

Fig. 4.

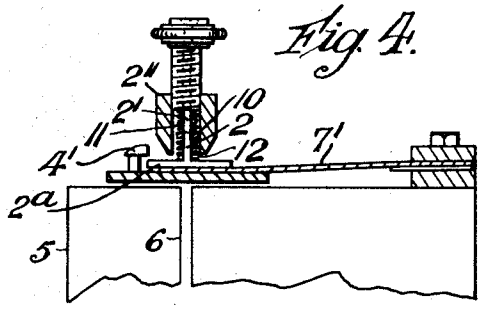

Fig. 5.

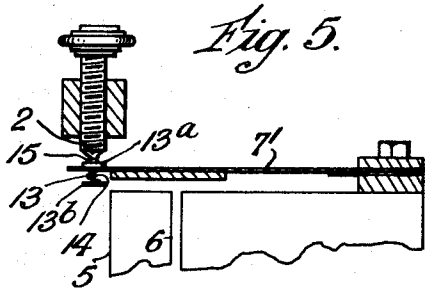

Inventors
B. D. Feild &
T. C. Standbrook
By their Attorneys,
Bredow & Wright

Patented June 21, 1932

1,863,975

UNITED STATES PATENT OFFICE

BERT DAVID FEILD, OF FOREST GATE, LONDON, AND THEODORE CECIL STANDBROOK, OF ILFORD, ENGLAND, ASSIGNORS TO STANFIELD RADIO COMPANY LIMITED, OF LONDON, ENGLAND, A COMPANY OF GREAT BRITAIN

ELECTRIC BUZZER, INTERRUPTER, AND LIKE VIBRATORY DEVICE

Application filed November 23, 1929, Serial No. 409,380, and in Great Britain November 24, 1928.

This invention relates to electric buzzers, interrupters and like vibratory devices. Such devices are well known, and in common use for a variety of different purposes, e. g. for vibratory alternating current rectifiers, for so-called "buzzer" wavemeters for radio waves, for certain forms of so-called "coil ignition systems", for internal combustion engines, for warning and other signalling devices, and for many other purposes.

Such vibratory devices normally comprise a magnetic core, a winding thereupon, a magnetic vibratory armature adapted to be attracted towards said core when said winding is energized, and contacts associated with said armature and adapted to open circuit said winding when said armature is attracted thereto.

One of the principal difficulties met with in such vibratory devices as generally employed is that the contact points are liable in use to be fused together sufficiently strongly to overcome the attractive force of the magnetic system with which the vibratory armature is associated, with the result that the buzzer stops. In many cases such stoppage, besides being in itself inconvenient, may occasion damage by permitting direct current to flow in circuits in which more or less high frequency intermittent or alternating current should flow. The much lower effective resistance of a highly inductive circuit to direct current than to intermittent or alternating current may, and frequently does, permit dangerously large currents to flow in such circuits when the buzzer stops.

The main object of this invention is to provide an electric buzzer, interrupter, or the like of new and improved construction wherein these objections are avoided, and which shall be economical to manufacture, satisfactory in operation and durable and reliable in use.

The invention will be better understood upon reference to the accompanying drawings in which Figure 1 is a perspective view and Figure 2 a section which shows the said invention as applied to a vibratory interrupter as incorporated in the apparatus described and illustrated in our prior application Serial No. 331,416 which became Patent No. 1,741,017 on December 24, 1929. Figs. 3, 4 and 5 are part views illustrating modifications.

Referring to Figs. 1 and 2 of the drawings, the interrupter comprises a laminated magnetic core 5 and co-operating energizing winding 3, 4. Vibratorily mounted so as to be attracted by said core when magnetized, is an armature of magnetic material 7*a*, preferably of comparatively large mass, and carried and spring biassed by a spring blade 1 away from said core. 6 is an air gap in the core. On the side of said armature remote from the core is a second blade 7*b*, arranged generally parallel to the first armature and more lightly spring-biassed towards it. On the back of the second blade is a contact 9 adapted to co-operate with an adjustable relatively fixed contact 2, said contacts being in series with the energizing winding as in the usual way. Attached to the armature and extending round the back of the second blade is a hooklike piece 4′, of length somewhat longer than the normal separation of the two blades.

A small block 8 preferably of rubber or like damping material of thickness equal to said normal separation, is interposed between the blades and is carried by one of them.

As shown, the relatively fixed contact 2 is resiliently mounted by means of a spring 7.

It will be seen that with this arrangement, should the contacts fuse together and the second blade thus tend to be held against the contact, the armature will move with an amplitude larger than the normal, owing to the fact that the energizing winding will receive current for a longer period than the normal, and in consequence, the hook carried by said armature will engage the second blade and forcibly break contact, so that the buzzer will continue to operate.

In a modification, illustrated in Fig. 3, the magnetic core face, towards which the first is attracted, is inclined or similarly formed non-planar, and said armature is made of flexible material, the arrangement being such that when said armature moves with a larger amplitude than normal, it is bent somewhat

(as indicated in dotted lines) due to the magnetic attraction forcing it to comply more or less with the inclined or other surface towards which it is attracted. This modification has the advantage that it enables the first armature to be of very light material, and is thus a convenient arrangement for high frequency buzzers.

Obviously, if desired, the armature may be of bent form and the magnetic face of usual form. Obviously also, the two moving members need not be parallel to one another nor arranged to lie behind one another over their whole length. Further, they need not normally be constituted by separate blades and may be, if desired, formed integrally with one another, the only necessity being that one moving member should be free to continue movement in a given direction, even if the other is held.

In another form of construction, the contact device does not comprise a vibratory armature in the ordinary sense of these words, but is constituted by a separate contact unit preferably arranged detachably so that it may readily be replaced. In one such arrangement, illustrated in Fig. 4 the contact unit comprises a pair of suitably mounted contact members 2—2′ which are normally insulated from one another by an insulating washer 10 and lightly spring-biassed away from one another by springs 11, 12 one (2′) of said contact members being adjustable in, but otherwise relatively fixed to, its associated carrying member 2″, and the other (2) of said contacts being free to move in its carrying member so as to contact with said fixed member when the spring bias is overcome. The whole unit is mounted in association with a vibratory armature 7′ which co-operates with the usual magnetic system, 5 the arrangement and connections being such that the contacts in the contact unit are in series with the energizing winding of the magnetic system and replace the usual buzzer contacts. The end of the movable contact member adjacent the back of the armature is formed with a T or similarly shaped head 2*a*, and the armature itself is provided with a hook-like projection 4′ between which and the armature itself the head of the movable contact member is located. The effective distance between the armature proper and the hook-like projection is greater than the thickness of the head of the movable contact member.

It will be seen that with this arrangement, the movable contact member 2 will ordinarily follow up the movements of the armature 7′, being impelled by its own spring bias to follow said armature when it is attracted, and being driven by the superior bias of said armature to close its contacts when said armature is released. If, however, the contacts should fuse together, said armature will be attracted and will move away from the contact device until the hook-like projection 4′ engages the back of the head 2*a* of the movable contact member, when, owing to the momentum the armature will have attained, the contact will be forcibly opened.

In a further modification, illustrated in Fig. 5 a pin 13 is slidably mounted in the usual armature 7′, and each end of the pin is formed with a shoulder 13*a* 13*b*, the distance between the shoulders being somewhat greater than the amplitude of movement of the armature. Between that shoulder (13*b*) which is adjacent the winding and the face of the armature is interposed a light spring 14, and the outer extremity of the other shoulder (13*a*) is provided with a platinum contact 15 adapted to contact with the usual platinum tipped contact screw 2. In this construction, the armature and pin normally vibrate together, but if the contacts fuse together the armature slides on the pin (which is held stationary by the fused contacts) against the action of the spring, until, when this is fully compressed, the fused contacts are separated by the pull of the armature transmitted through that shoulder on the pin adjacent the winding.

We claim:

1. An electric vibratory device comprising a flexible vibratory armature, an electro-magnetic system for attracting said armature, said armature being inclined with respect to the attracting surface of said electro-magnetic system, a contact device having contacts in the circuit of said electro-magnetic system and lost motion means between said armature and said contact device for operating said device said lost motion being less than the maximum amplitude of said armature.

2. An electric vibratory device comprising a flexible armature member carried upon a vibratory spring blade, an electromagnet for attracting said armature, the attracting surface of said magnet being inclined with respect to the attracted surface of said armature, a second vibratory spring blade having one end over one end of said first mentioned blade, a hook upon said first mentioned blade and extending over the back of said second blade, a contact upon said second blade, a fixed contact co-operating with said last mentioned contact, and a circuit extending through said contacts and the energizing winding of said electro-magnet.

3. An electric vibratory device comprising an armature member carried upon a vibratory spring blade, an electro-magnet for attracting said armature, a second vibratory spring blade having one end over one end of said first mentioned blade and separated therefrom by resilient damping material, a hook upon said first mentioned blade and extending over the back of said second blade, a contact upon said second blade, a fixed contact co-operating

with said last mentioned contact, and a circuit extending through said contacts and the energizing winding of said electro-magnet.

4. An electric vibratory device comprising a vibratory armature an electro-magnetic system for attracting said armature, a contact device having contacts in the circuit of said electro-magnetic system, spring means for applying a force tending to separate said contacts, spring bias means upon said armature said spring bias means being stronger than and opposed to said first mentioned spring means, means for holding one of said contacts fixed, an engagement member upon the other contact and a hook upon the armature for engaging said engagement member just before said armature is fully attracted.

In testimony that we claim the foregoing as our invention we have signed our names this 14th day of November 1929.

BERT DAVID FEILD.
THEODORE CECIL STANDBROOK.