H. SYNER.

PAPER BOX.

APPLICATION FILED JUNE 14, 1907.

914,321.

Patented Mar. 2, 1909.

2 SHEETS—SHEET 1.

Fig. 1.

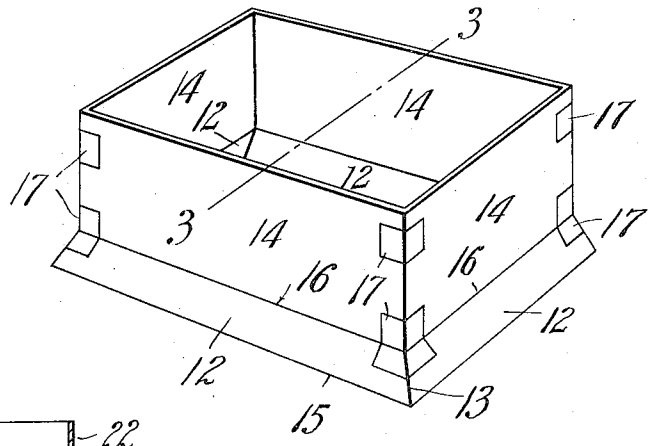

Fig. 3.

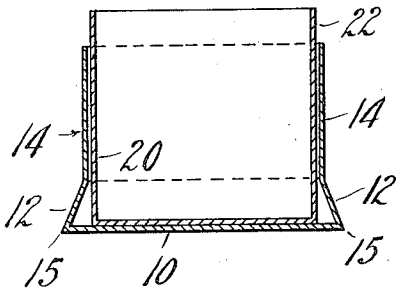

Fig. 2.

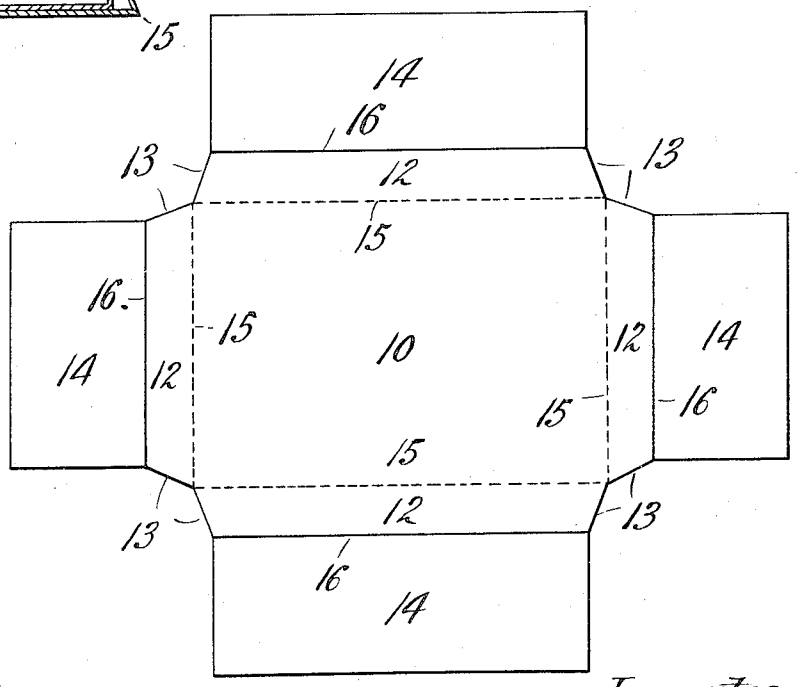

Witnesses:

H. L. Sprague

R. M. Mowry

Inventor,

Henry Syner,

by Wm. C. Sellers

Attorney.

H. SYNER.

PAPER BOX.

APPLICATION FILED JUNE 14, 1907.

914,321.

Patented Mar. 2, 1909.

2 SHEETS—SHEET 2.

Fig. 4.

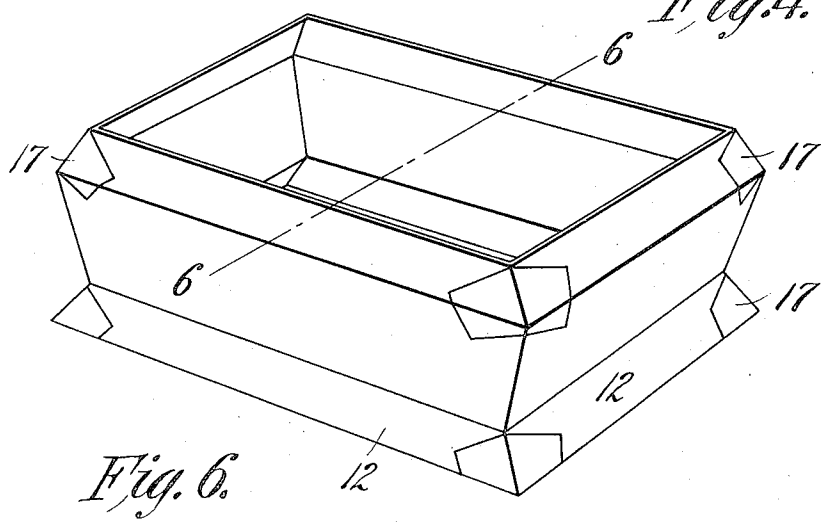

Fig. 6.

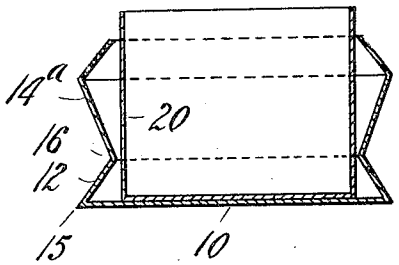

Fig. 5.

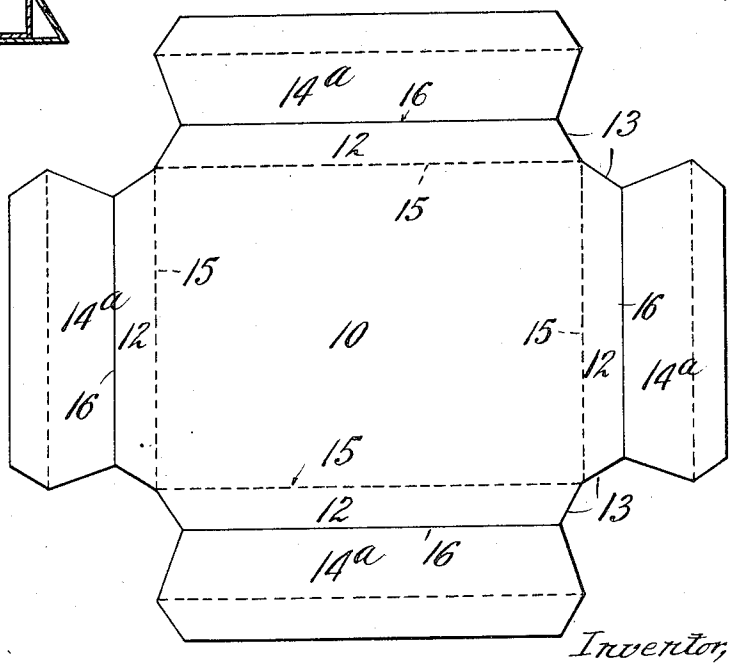

Witnesses:
H. L. Sprague
R. M. Mowry

Inventor,
Henry Syner,
by Wm. G. Bellows,
Attorney.

UNITED STATES PATENT OFFICE.

HENRY SYNER, OF SPRINGFIELD, MASSACHUSETTS, ASSIGNOR TO NATIONAL PAPETERIE COMPANY, OF SPRINGFIELD, MASSACHUSETTS, A CORPORATION OF MASSACHUSETTS.

PAPER BOX.

No. 914,321. Specification of Letters Patent. Patented March 2, 1909.

Application filed June 14, 1907. Serial No. 379,003.

To all whom it may concern:

Be it known that I, HENRY SYNER, a citizen of the United States of America, and resident of Springfield, in the county of Hampden and State of Massachusetts, have invented certain new and useful Improvements in Paper Boxes, of which the following is a full, clear, and exact description.

This invention relates to improvements in the manufacture of paper boxes having base portions of outwardly and downwardly beveled form, all more or less of the shape of the frustum of a pyramid.

There is a somewhat extensive trade demand for papeterie and other boxes which have essentially the stated base formation, and in the manufacture of such boxes it has heretofore been customary to construct from a number of cardboard or paper blanks the base portion of the box and to separately form and build on and attach the side forming portions of the box to such base portion, which latter has usually comprised a bottom section and a false bottom section horizontally thereover,—the one horizontal section being connected with, and sustained from the other by separately provided, side portions secured in inclined relations. The construction of boxes after the manner referred to has been found to be very slow and comparatively expensive. And it is the object of the present invention to provide an integrally formed blank having portions or sections of proper form and made with creasing lines or scorings and to produce boxes or cases therefrom which have, essentially, the bevel base formations to the end of greatly increased rapidity and cheapness of production, and also of increasing the desirability of the box over those of similar general contour heretofore manufactured.

The invention consists in a card board or paper blank, for constituting a box or case, having formations hereinafter described, and in a box produced therefrom, all as set forth in conjunction with the accompanying drawings and covered by the claims.

In the drawings,—Figure 1 is a perspective view of a comparatively simple form of box made in accordance with the present invention. Fig. 2 is a plan view of the single blank from which the box shown in Fig. 1 is produced. Fig. 3 is a cross sectional view as taken on the line 3—3, Fig. 1, of the box or case there shown, and illustrating also the provision of an inner box or "insert". Figs. 4, 5 and 6 are views of character corresponding respectively to Figs. 1, 2 and 3, for showing the formations of box or case and the blank from which it is produced of a somewhat more elaborate character.

In the present drawings, the box is shown as of rectangular form, although the invention is not limited necessarily to rectangular boxes, which, however, are those of the most extensive production.

The box or case is made of a single blank, which for the production of a box such as shown in Fig. 1 comprises a rectangular bottom constituting portion or section 10, wings 12, 12, 12, 12, extending outwardly from the several margins of the rectangular bottom portion, the end 13 of each wing being formed at an obtuse angle to the end portion of each adjacent wing; and each of said wings has a further outward box side-forming extension which in Sheet 1 of the drawings is of rectangular form. The blank is made with creasings or scorings 15, 15, 15, 15, in rectangular arrangement, at the junctions of the bottom constituting portion 10 with the trapezoidal shaped wings 12; and the blank is also made with creasings or scorings 16, 16, 16, 16, at the junctions of the wings 12 with the outward extensions 14, on lines located outwardly beyond and parallel with the first named scorings 15. The blank having the contour and scorings is made into the box or case shown in Figs. 1 and 2 by bending the four wings 12 upwardly and inwardly inclined relatively to the bottom constituting section 10 with their edges matching or adjoined, and disposing the four side forming wing extensions 14 slightly angular to the wings 12 which constitute the bevel box base, to complete the box side inclosure. The box so set up is "stayed" at the corners with small pieces of thin paper 17, pasted on; and the so produced box or case is usually covered with an ornamental or finishing paper, not necessary to be represented in the present drawings.

The box made as described and having substantially the formation referred to may be used solely, or it may have another box or "insert" 20 fitted therein, with its lower portion located and supported within the hollow bevel base, and having a height whereby its upper edge portions project above the top of

the originally provided box or case to constitute a cover receiving neck 22.

In the form of box represented in Figs. 4 and 6 and the blank, for the production thereof, shown in Fig. 5, it will be observed that the same formation and arrangement of base 10, wings 12, obtuse angled ends 13, and scorings 15 and 16 prevails, as shown in the first sheet of the drawings, but to impart to the box a formation at the sides thereof above the bevel base other than the vertical, the four box side constituting wing extensions 14^a are of dimensions and endwise formations so that when matched together a casket shaped box or case is produced.

There are many modifications as regards the side contour of the box above the beveled base which may be carried out by properly shaping the box side forming wing extensions as the desirability thereof may require, and all within the scope of the present invention.

I claim:—

1. A paper box having a beveled base, consisting of a single blank comprising a rectangular bottom-constituting portion, wings extended outwardly from the several margins of the bottom portion, the end of each wing being formed at an obtuse angle to the end portion of each adjacent wing, said wings each having a further outward box-side forming extension, said wings being bent at upward and inward inclinations relatively to the bottom section with their edges adjoined, and with the ends of the side forming wing extensions also adjoined, and means for staying the set up box.

2. A single blank for making a box having a base of beveled form, and with sides extended above the base, comprising a rectangular bottom constituting portion, wings extended outwardly from the several edges of the bottom portion and having the end of each wing formed at an obtuse angle to the corresponding portion of each adjacent wing, said wings each having a further outward side forming extension, scorings in rectangular arrangement at the junctions of the bottom constituting portion with said wings, and scorings at the junctions of the wings with the outward extensions thereof on lines located outwardly beyond and parallel with the first named scorings.

3. A paper box or case having a beveled base, comprising a single blank consisting of a rectangular bottom-constituting portion, wings extended outwardly from the several margins of the bottom portion, the end of each wing being formed at an obtuse angle to the end portion of each adjacent wing, said wings each having a further outward box-side forming extension, said wings being bent at upward and inward inclinations to the bottom section with their edges adjoined, and with the ends of the side forming wing extensions also adjoined, means for staying the set up box or case, and an inserted paper box of rectangular form set within the so formed set up case with its lower portion located and supported within the hollow beveled base thereof, and having a height whereby its upper edge portions project above the top of the case, to constitute a cover receiving neck.

Signed by me at Springfield, Mass., in presence of two subscribing witnesses.

HENRY SYNER.

Witnesses:
ALBERT G. BENNETT, Jr.,
THOMAS W. KENNEDY.