June 10, 1930. S. E. TEST 1,762,366

PROCESS OF AND APPARATUS FOR WARMING AND CLEANING POOLS

Filed Aug. 24, 1928

FIG. 1

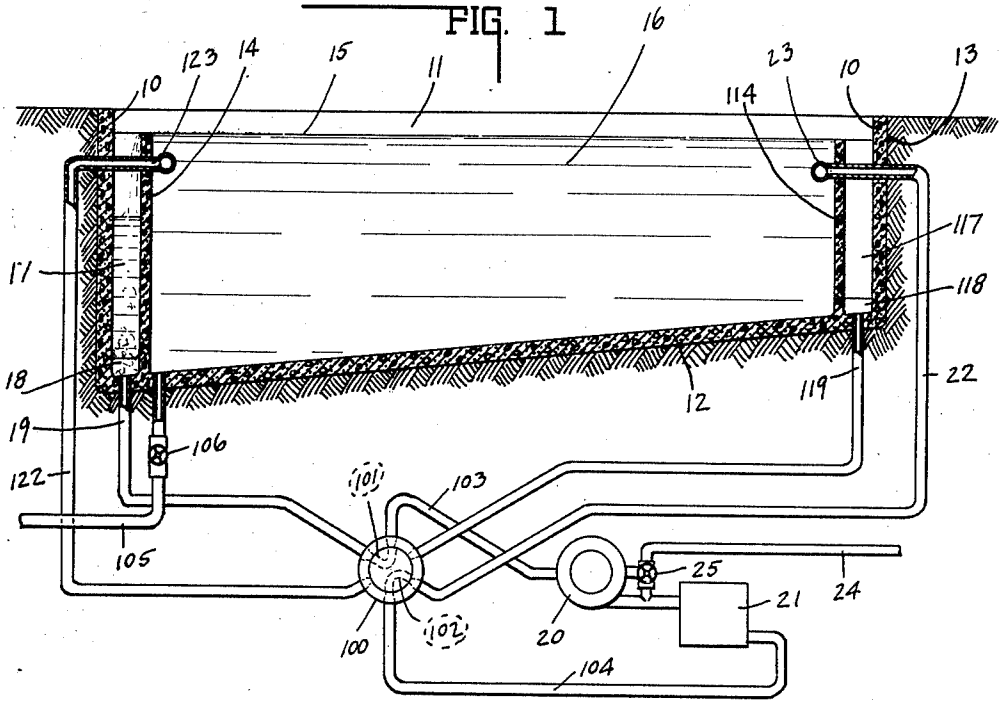

FIG. 2

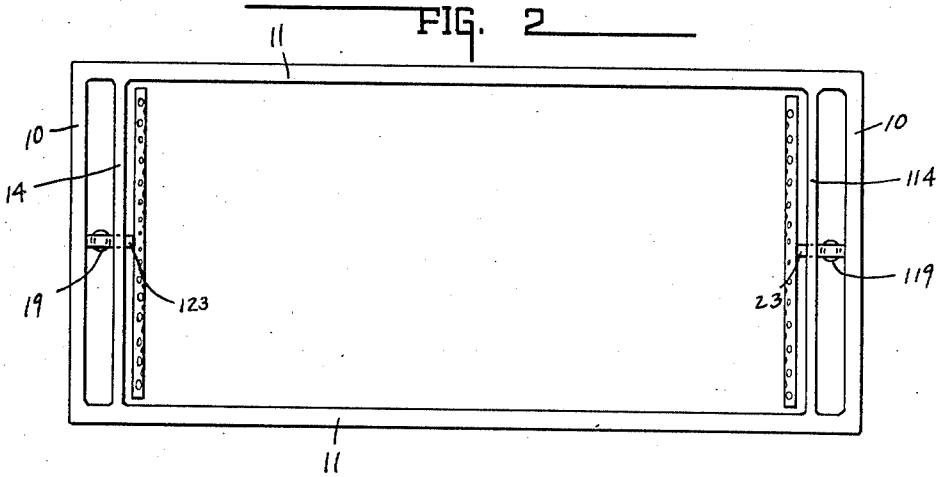

INVENTOR.
SKILES E. TEST.
BY Lockwood & Lockwood
Goldsmith & Galt
ATTORNEYS.

Patented June 10, 1930 1,762,366

UNITED STATES PATENT OFFICE

SKILES E. TEST, OF INDIANAPOLIS, INDIANA

PROCESS OF AND APPARATUS FOR WARMING AND CLEANING POOLS

Application filed August 24, 1928. Serial No. 301,891.

This invention relates to a process of and apparatus for warming and cleaning a swimming pool or the like.

The chief object of this invention is to render a pool sanitary and comfortable by the provision of suitable means so that the predetermined flow of the water in the pool can be obtained.

The chief feature of the invention consists in the formation of an auxiliary draining chamber toward which the surface water drains, and another feature of the invention consists in passing the drainage and warm surface water through a filter and returning the same to the pool below the level thereof to insure circulation between the water of different temperatures so as to retain the normal temperatures in the pool.

The full nature of the invention will be understood from the accompanying drawings and the following description and claims:

In the drawings Fig. 1 is a vertical longitudinal sectional view of the pool with the apparatus diagrammatically associated therewith. Fig. 2 is a top plan view of the pool.

In the drawings 10 indicates the end walls of a pool, 11 the side walls and 12 the bottom, which preferably is inclined slightly or to the desired degree to provide different depths, although the bottom may be of one level.

To maintain a private pool sanitary in an inexpensive manner is the problem solved by this invention. To do so economically, since a private pool is not in constant use, is also a problem solved by this invention. To economically maintain normal temperatures in a private pool where the amount of make-up is relatively small and the cost of a heating system is prohibitive, is another problem solved by the present invention.

The outdoor pool preferably is constructed in a pit 13 and it is usually of rectangular outline, as shown, and is laid with its ends transverse to the usual direction of prevailing winds, although the same is not necessary. The purpose of this will be set forth hereinafter.

Adjacent each end of the pool is a baffle or partition wall 14 which is substantially at the level 15 of the water in the pool, forming a main chamber 16 and an auxiliary chamber 17 across the end of said pool. The bottom of this chamber may be inclined as at 18 to a pipe or drain 19. The leaves, sticks, scum, dirt and the like collecting upon the surface 15 of the water, when there is a flow of the surface water over the top of the partition, flow into and be collected by the auxiliary chamber. The usual drain 19 secures separation. The flow may be caused by a pump 20 discharging at 23 into the pool.

When cyclic operation is desired, all of the débris, surface scum or the like passes over into the auxiliary chamber 17, the larger particles collecting therein and the remainder passing out through the pipe or drain 19 to the pump 20, which passes the same through a filter 21 and a pipe line 22 to a nozzle or outlet 23 at the opposite end of the tank or pool. This is a T pipe arrangement with progressively increasing orifices for securing substantially uniform sheet discharge across the full width of the pool. Preferably the outlet 23 discharges considerably beneath the surface level, for example, from a foot to two feet therebeneath. The surface water is usually warm either by reason of contact with warm air or by reason of the sun shining upon it or both, and this warm surface water is returned by the aforesaid construction to the tank and at a level so as to insure a suitable depth of warm water in the tank. If the discharge were lower or nearer the bottom, the warm water taken from the top would pass through the cold water and mix therewith with the result that the temperature of the pool would be constant but not comfortable, as it is desirable to have the temperature of the top two feet of water in the pool warmer than the remainder of the pool, since it is impracticable or uneconomical to heat the entire contents of the pool.

Since there will be considerable evaporation and other losses due to splashing and the like, line 24 controlled by valve 25 supplies the make-up necessary to keep the pool filled.

In the present form of the invention baffle

114 is shown opposite baffle 14 and compartment 117 is formed thereby floored similarly as at 118 and includes the drain 119. At the opposite end the discharge 123 is supplied by line 122 and a valve construction 100 having passages 101 and 102 therein is adapted to selectively connect pipe 19 to pump 20 and line 103 to line 22 and filter 21 by line 104 or connect lines 103 and 104 to lines 119 and 122 respectively for reverse flow if the wind be in a reverse direction. A single combination valve such as diagrammatically illustrated at 100 can simultaneously reverse the flow.

The present invention can be operated and filter the entire tank contents, and its operation will automatically remove the surface dirt and scum from the tank. That dirt which settles out of the water and upon the bottom 12 of the tank may be suitably removed by using a suction device such as of the vacuum cleaner type and which is commonly employed in pools. When it is desired to drain the tank the valve 106 in drain 105 is opened and the tank contents is wasted.

The invention claimed is:

1. A swimming pool including a wall at one end at substantially the level of the pool contents and having a substantially level top and over which the surface contents of the pool drains as a surface sheet for cleaning the top of the pool, a collection chamber adjacent the pool and into which the sheet drainage is discharged, a discharge into the pool near the opposite end of the pool and arranged to discharge longitudinally of the pool and substantially across the full width thereof, a filter connected to the collection chamber, and a pump interposed between the chamber and the pool and connected to the filter whereby circulation of only the pool surface contents through the filter is obtained.

2. A swimming pool of the character defined by claim 1, characterized by each end of the pool having a discharge, a wall and a chamber of the character described, and the addition of connections between the discharges, chambers, filter, and pool for obtaining reverse surface flow drainage.

3. A swimming pool of the character defined by claim 1, characterized by opposite ends of the pool being similarly formed, and the addition of a single, six-ported valve construction, and connections from the ports thereof to the opposite chambers, pump and filter for obtaining reverse flow drainage.

4. A swimming pool of the character defined by claim 1 characterized by the pool having an inclined bottom, and the addition of a valve controlled drain near the lower end thereof for cleaning the lower portion of the pool.

5. A swimming pool of the character defined by claim 1 characterized by each end of the pool having a discharge, a wall and a chamber of the character described, said pool having an inclined bottom, connections between the discharges, chambers, filter and pool for obtaining reverse surface flow drainage, and a valve controlled drain near the lower end of the pool for cleaning the lower portion thereof.

In witness whereof, I have hereunto affixed my signature.

SKILES E. TEST.