Oct. 11, 1932. N. WISE 1,882,106

TELEPHONE APPARATUS

Filed May 1, 1931 7 Sheets-Sheet 1

Fig. 1.

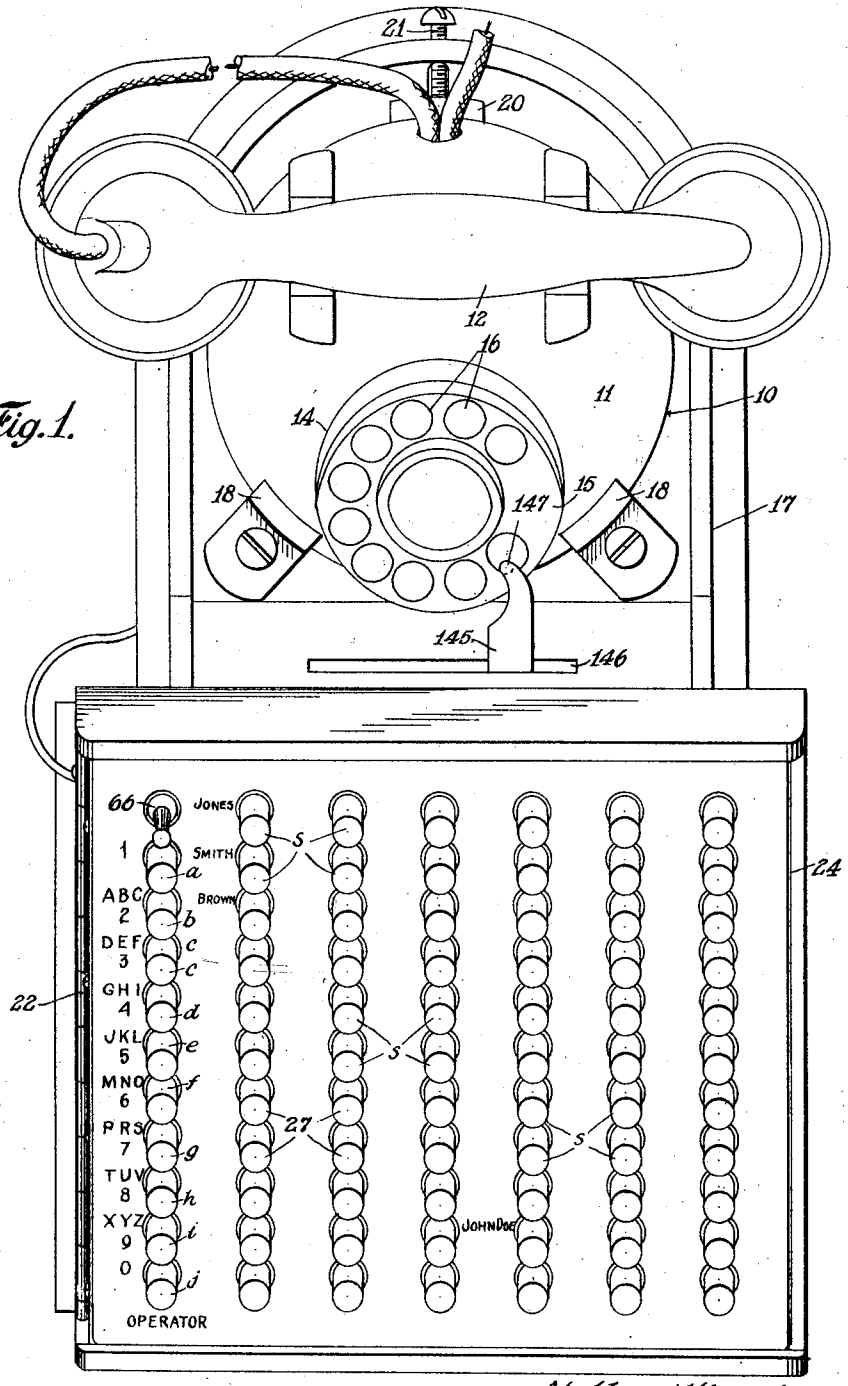


Nathan Wise, deceased
by Aaron W. Levy, Executor
and Pearl I. Wise, Executrix
BY
Williams Richards & Morse
ATTORNEYS

Oct. 11, 1932. N. WISE 1,882,106

TELEPHONE APPARATUS

Filed May 1, 1931 7 Sheets-Sheet 2

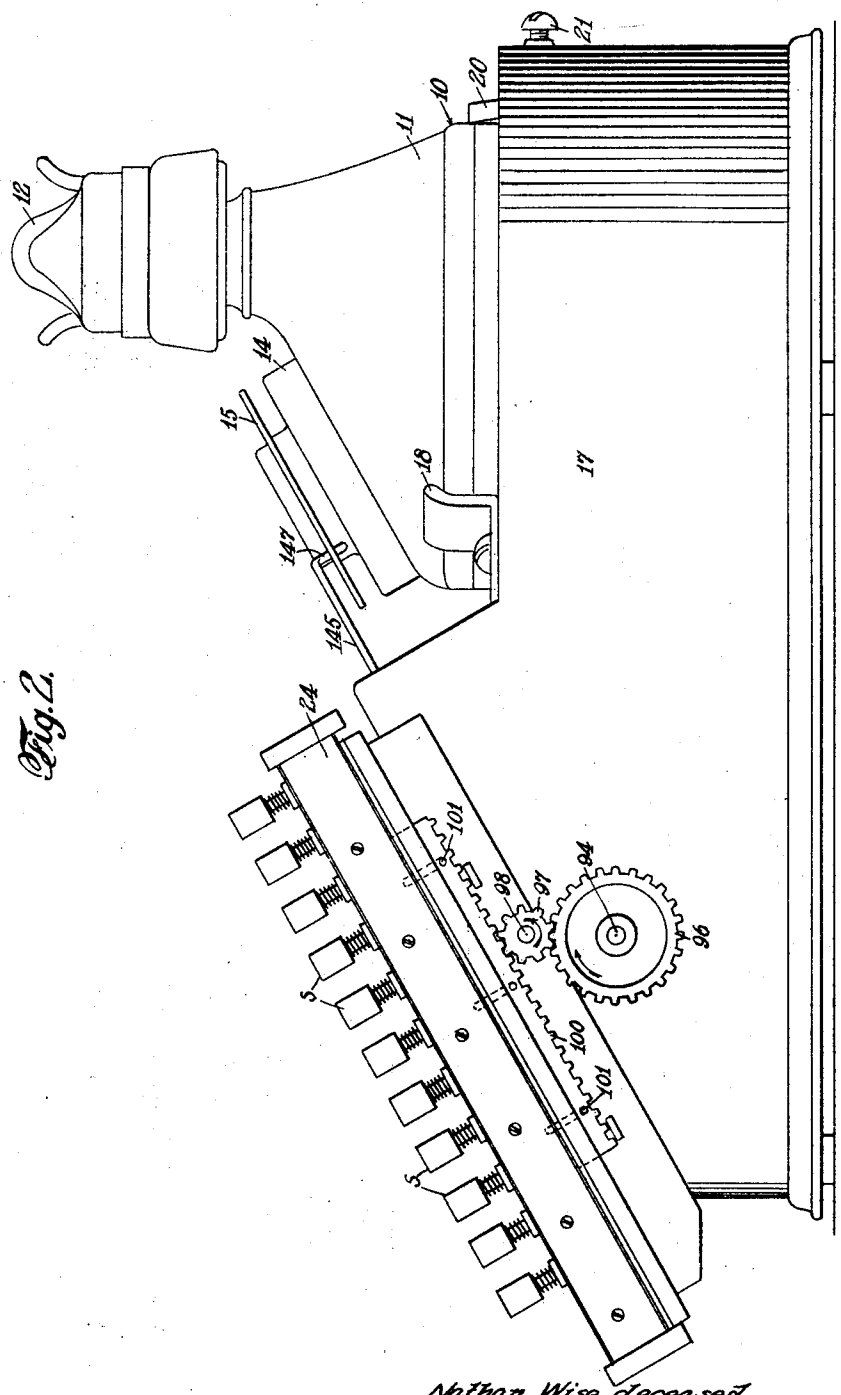


Fig. 2.

Nathan Wise, deceased
by Aaron Wm. Levy, Executor
and Pearl I. Wise, Executrix

BY Williams & Richtmore
ATTORNEYS

Oct. 11, 1932. N. WISE 1,882,106

TELEPHONE APPARATUS

Filed May 1, 1931 7 Sheets-Sheet 3

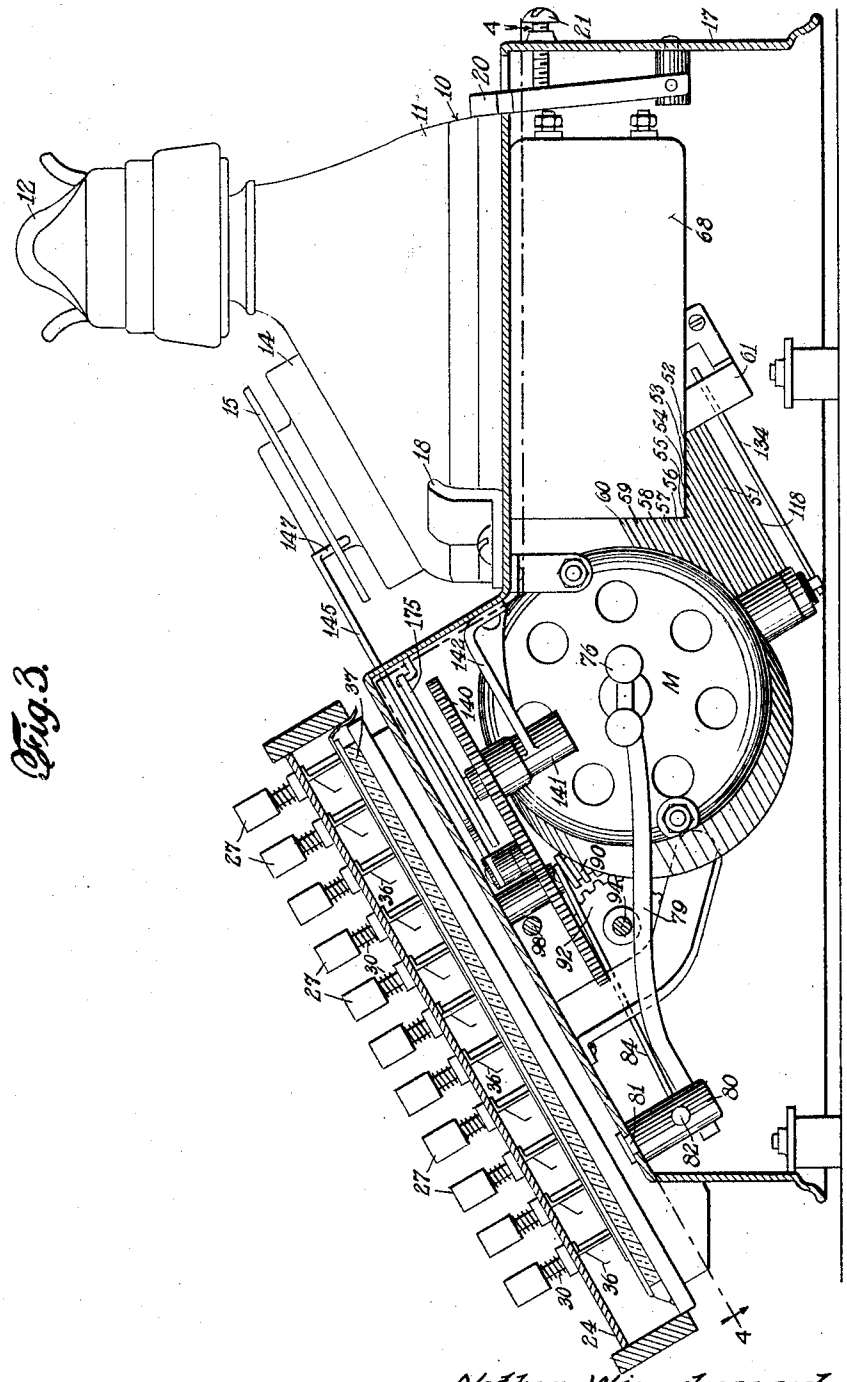

Fig. 3.

Nathan Wise, deceased
by Aaron Wm. Levy, Executor
and Pearl I. Wise, Executrix

BY Williams Richardson
ATTORNEYS

Oct. 11, 1932. N. WISE 1,882,106

TELEPHONE APPARATUS

Filed May 1, 1931 7 Sheets-Sheet 4

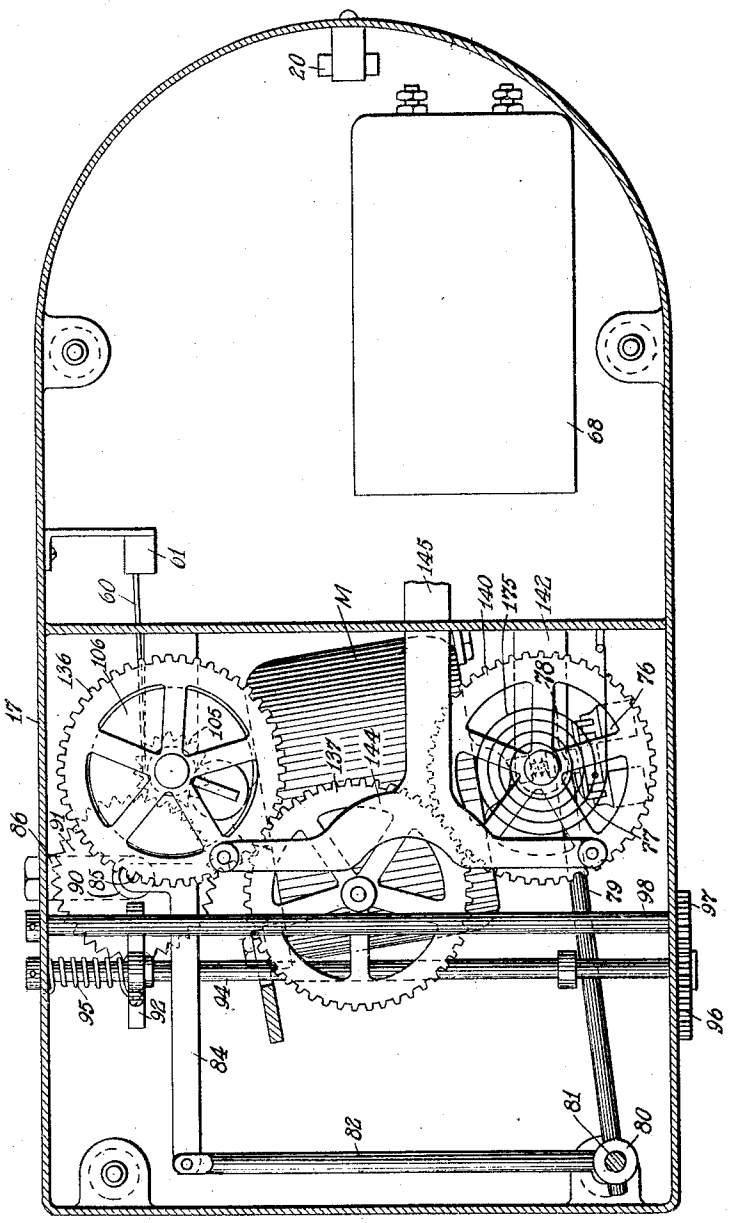


Fig. 4.

Nathan Wise, deceased
by Aaron Wm. Levy, Executor
and Pearl I. Wise, Executrix

BY

Williams Richardson

ATTORNEYS

Oct. 11, 1932. N. WISE 1,882,106

TELEPHONE APPARATUS

Filed May 1, 1931 7 Sheets-Sheet 5

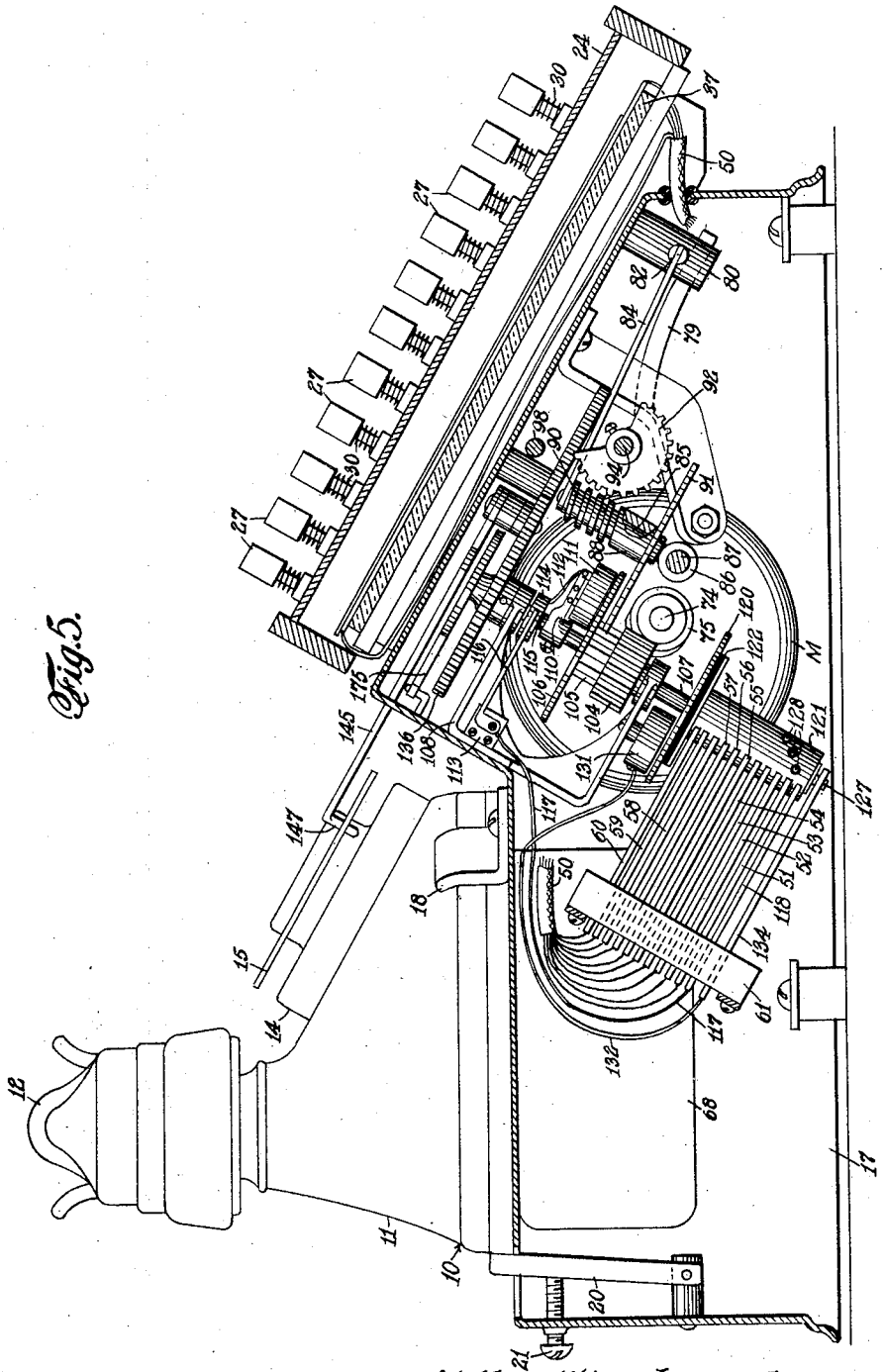

Fig. 5.

Nathan Wise, deceased
by Aaron Wm. Levy, Executor
and Pearl I. Wise, Executrix
BY Williams & Richardson
ATTORNEYS

Oct. 11, 1932. N. WISE 1,882,106

TELEPHONE APPARATUS

Filed May 1, 1931 7 Sheets-Sheet 6

Fig. 6.

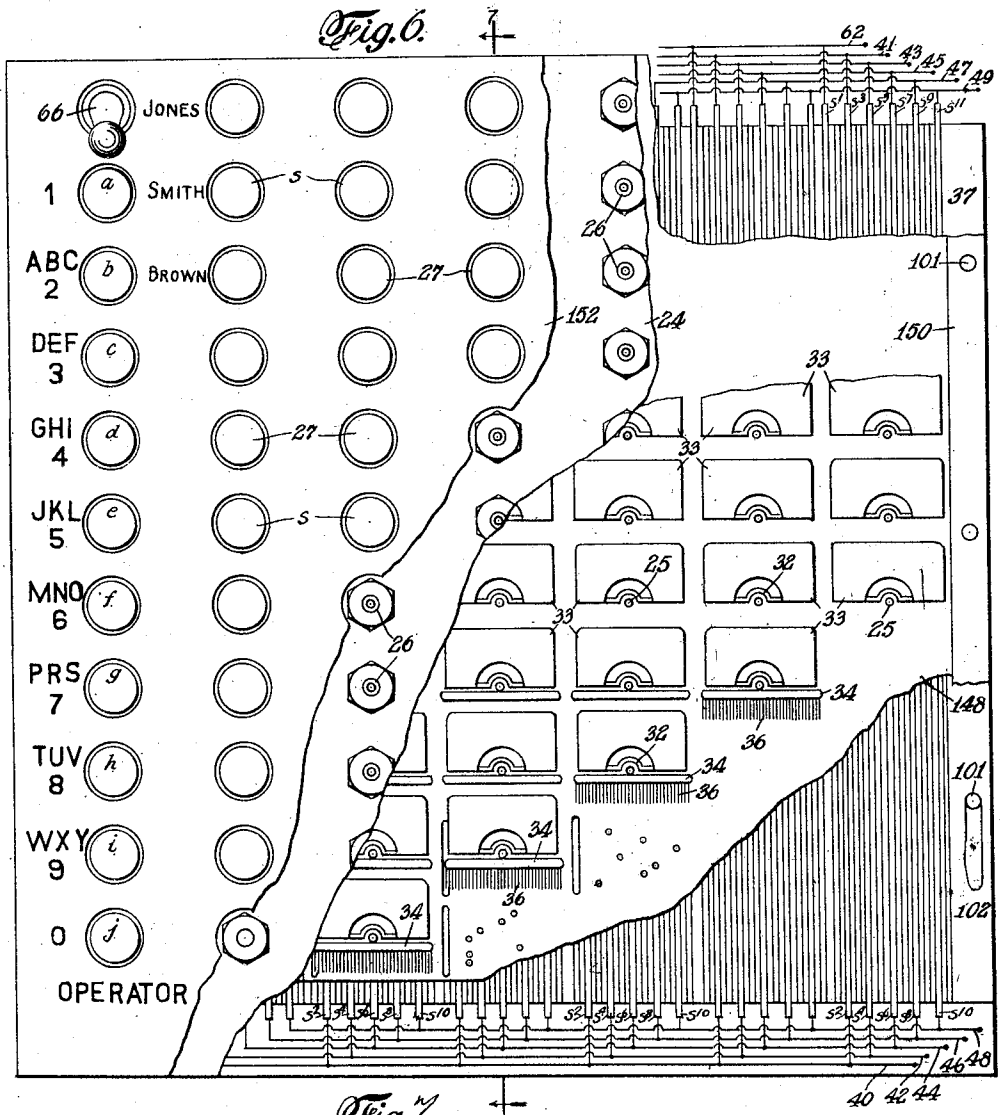


Fig. 7.

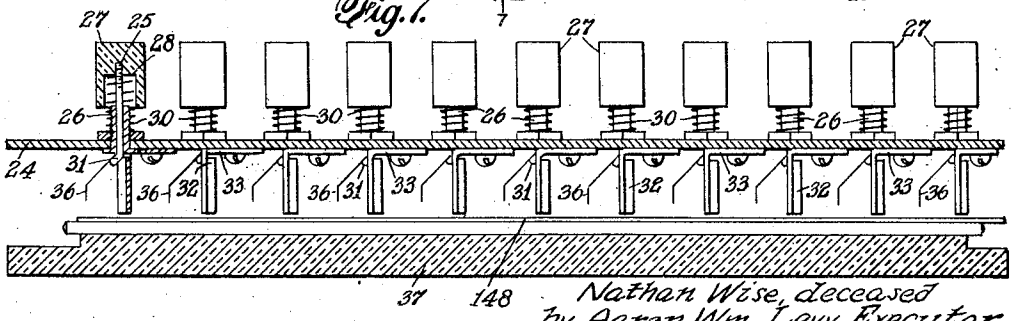

Nathan Wise, deceased
by Aaron Wm. Levy, Executor
and Pearl L. Wise, Executrix
BY Williams Richards & Morse
ATTORNEYS

Oct. 11, 1932. N. WISE 1,882,106

TELEPHONE APPARATUS

Filed May 1, 1931 7 Sheets-Sheet 7

Fig. 8.

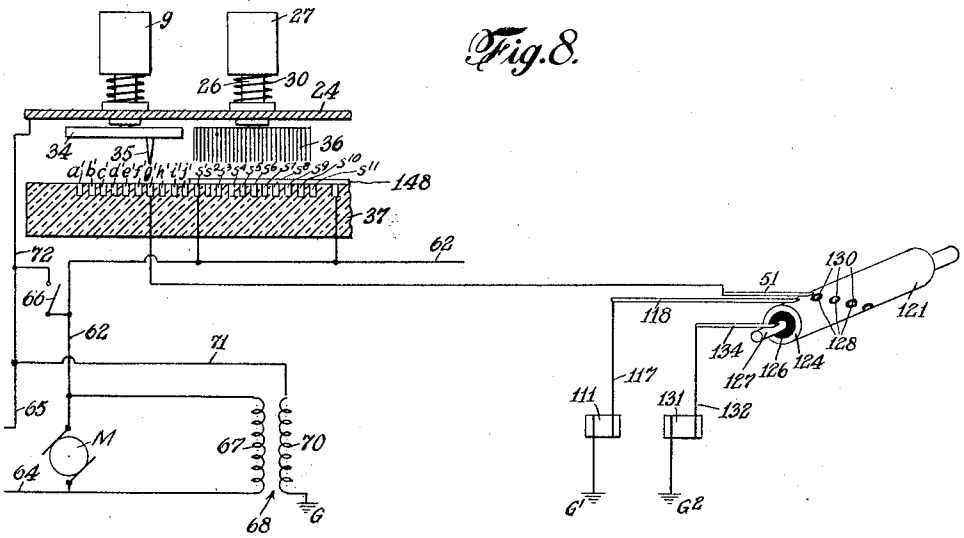


Fig. 9.

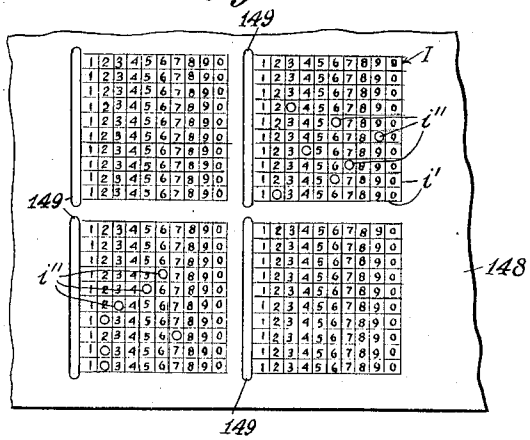


Nathan Wise, deceased
by Aaron Wm. Levy, Executor
and Pearl L. Wise, Executrix

BY

BY Williams Richt Morse

ATTORNEYS

Patented Oct. 11, 1932 1,882,106

# UNITED STATES PATENT OFFICE

NATHAN WISE, DECEASED, LATE OF MOUNT VERNON, NEW YORK, BY AARON W. LEVY, EXECUTOR, OF BROOKLYN, NEW YORK, AND PEARL L. WISE, EXECUTRIX, OF MOUNT VERNON, NEW YORK

## TELEPHONE APPARATUS

Application filed May 1, 1931. Serial No. 534,303.

This invention relates to telephone apparatus and has particular reference to impulse transmitter actuating means, adapted for use in association with telephone equipment, such as is ordinarily employed at subscribers' stations in connection with automatic telephone systems.

An object of the invention is to provide an improved impulse transmitter actuating apparatus, whereby the transmittal of telephone numbers may be easily and expeditiously effected.

Another object of the invention is to provide an improved apparatus of the character mentioned, whereby a plurality of recorded telephone numbers may be selectively transmitted with dispatch and accuracy.

Other objects and advantages of the invention will become apparent from the following description, taken in connection with the accompanying drawings, in which—

Fig. 1 is a plan view of the apparatus embodying this invention.

Fig. 2 is a side elevation of the apparatus.

Fig. 3 is a view similar to that of Fig. 2, but with the housing broken away.

Fig. 4 is a sectional view taken on line 4—4 of Fig. 3.

Fig. 5 is a view similar to that of Fig. 3, but with the far side of the housing broken away.

Fig. 6 is an enlarged view of the control panel shown most clearly in Fig. 1, certain elements being broken away for the sake of clarity.

Fig. 7 is a vertical sectional view taken on line 7—7 of Fig. 6.

Fig. 8 is a diagrammatic view, showing the relation of certain control circuits to the clutch and brake controlling commutator; and

Fig. 9 is an enlarged fragmental view of an index sheet, certain record areas of which are shown perforated in accordance with certain telephone numbers.

A standard telephone 10, with which the apparatus embodying this invention is particularly adapted for use, includes a base 11, a receiver and transmitter unit 12, and a finger-wheel-actuated impulse transmitter 14, which is of well known design and is characterized by a rotatable finger wheel or disc 15 provided with a plurality of finger-receiving openings 16, corresponding to various characters, both letters and numerals, to be selected in the dialing of telephone numbers.

The apparatus, herein shown in association with the telephone 10, includes a housing 17, adapted to accommodate therein various mechanisms of the apparatus and to support thereon the telephone, which may be secured in place by suitable clamping means, comprising, for example, a pair of stationary abutments 18, and a movable clamp finger 20, which is suitably pivoted to the inner wall of the housing and is adapted to be moved into clamping engagement with the base of the telephone by a pressure screw 21 carried by the housing.

Suitably connected to the housing 17, as by a hinge 22, is a cover or control panel 24, which carries a plurality of selective control buttons or switches *a* to *j*, inclusive, and a plurality of individual control buttons or switches *s*, it being noted that there is but one row of selective control buttons, whereas there are a plurality of rows of individual control buttons. As will hereinafter more clearly appear, the selective control buttons are employed singularly—one for each character, either a letter or a numeral, of a telephone number to be called; and the individual control buttons are employed singularly for the complete calling of recorded telephone numbers to which they respectively correspond. Each of the selective switches as well as each individual switch includes a shank 25, mounted for vertical movement in a bearing 26, secured to the cover 24, the shank being provided at its upper end with a finger piece 27, of insulating material, which is provided with a cup-like recess 28, adapted for the reception of the upper end of a spring 30, which is supported by the cover and is adapted to maintain its associated switch normally in open-circuit position. The lower end of each shank 25 is bent at an angle to provide an arm 31, adapted to slide in a groove or channel 32, formed in a depending guide 33,

which is secured to the cover and cooperates with said arm to hold the control button against rotation. To the arm 31 of each shank 25, is secured a horizontally disposed brush bar 34, which extends transversely of the cover or control panel 24. Secured to the brush bar 34 of the respective switches *a* to *j* inclusive, is a contact finger 35. These contact fingers are differently positioned, that is to say, they are located out of alignment with each other; and the reason for this non-aligned relation will hereinafter more clearly appear. To the brush bar 34 of each of the switches *s*, is secured a contact brush 36, which is composed of a plurality of fine and more or less resilient wires arranged in a row extending transversely of the cover or control panel 24, each brush being of a width much greater than the width of the contact finger 35, for the reasons which will hereinafter become apparent.

Carried by the housing 17, is an insulating base 27, directly above which the cover or control panel 24 is normally positioned. In the face of this insulating base, is embedded a plurality of contact bars $a_1$ to $j_1$, which correspond to the control switches *a* to *j*, inclusive. Also embedded in the insulating base 37 are a plurality of groups of contact bars $s_1$ to $s_{11}$, inclusive. All of the contact bars, $a_1$ to $j_1$ and $s_1$ to $s_{11}$, are arranged in a parallel relation with their upper faces exposed. Considering Fig. 6, it will be noted that the contact bars $a_1$ to $j_1$, inclusive, are respectively connected to the several contact bars $s_2$ to $s_{11}$, inclusive, by conductors 40 to 49 inclusive. All of these conductors, as will be understood from Fig. 5, pass through a protective conduit 50 and lead respectively to a plurality of commutator brushes 51 and 60, located within the housing where they are held in a spaced relation by an insulating support 61, suitably connected to the housing 17.

Referring again to Fig. 6, it will be noted that the several contact bars $s_1$ are connected together by a conductor 62, which, as shown in Fig. 8 is connected to one of the armature brushes of a motor M, employed as a driving unit for the apparatus and suitably supported within the housing 17. This motor may be connected to an ordinary house lighting circuit through leads 64 and 65, between the latter of which and the conductor 62 is disposed a switch 66. This switch 66 is of a suitable manually actuated type and may be conveniently carried by the cover or control panel 24, immediately above the row of selective buttons or switches *a* to *j*. Connected across the armature of the motor M, is the primary winding 67 of a step-down transformer 68, which is suitably supported within the housing 17. The secondary winding 70 of this transformer is grounded to the housing 17, as shown at G, and is connected at its other end, by a conductor 71, to the conductor 65, from which a branch conductor 72 leads to and is connected to the cover or control panel 24, which is insulated from the housing 17 by the insulating base 37 to which the cover hinge 22 is connected and on which such cover normally rests.

The shaft 74 of the motor M is provided at one end with a worm 75, and carries at its other end a centrifugal governor 76, which is of standard construction and includes a slidable sleeve 77, having formed therein an annular groove or channel 78, adapted to receive the end of a trip lever 79, connected to a sleeve 80, journalled on a trunnion 81 which is secured to the housing 17. Connected to the sleeve 80 is a trip arm 82, to the outer end of which is connected a thrust link 84. This thrust link is suitably connected to the upper end of an oscillatory shaft 85, carried by a bearing hub 86, mounted on a stationary shaft or pin 87, suitably supported by the housing 17, the shaft 85 being adapted to move under the influence of the governor 76 to the right or left, as viewed in Fig. 5, about the shaft 87 as an axis. On the shaft 85 is mounted a sleeve 88, one end of which is provided with a worm 90, and the other end of which carries a spur gear 91. The worm 90 is adapted, as the speed of the motor is accelerated to engage a segmental gear 92, connected to a transverse shaft 94 suitably journalled in the side walls of the housing 17, and is adapted to move out of engagement with that gear as the speed of the motor decreases. Upon engagement of the worm 90 with the segmental gear 92, the shaft 94 is rotated against the influence of a tortion spring 95 carried by that shaft, one end of such spring being anchored to the housing 17 and the other end thereof being suitably connected to the gear 92. To the outer end of the shaft 94, is connected a spur gear 96, which meshes with a similar gear 97, carried by a transverse shaft 98 journalled in the side walls of the housing 17. This latter gear meshes with a rack 100, slidably mounted on the housing 17, and is provided with a plurality of pins 101, which project upwardly through elongated openings or slots 102, formed in one of the longitudinal margins of the insulating base 37, the purpose of the pins 101 being to effect lateral shifting of an index sheet hereinafter more particularly described.

The worm 75 which is carried by the motor shaft 74, engages a pinion 104, formed integral with a somewhat smaller pinion 105, which meshes with the gear 91 and carries a metallic disc 106. The gears 104 and 105, together with the disc 106, constitute an integral unit, which is loosely mounted on a shaft 107, journalled in the arms of a bracket 108 suitably connected to the housing 17. Secured to the shaft 107, is a radially disposed arm 110, to the outer end of which

is connected a clutch magnet 111, of conventional design, which is grounded to the housing 17, as shown at $G_1$ in Fig. 8, and is adapted, when energized, to lock the shaft 107 to the disc 106 and thereby establish a driving connection between the motor M and that shaft. As to the magnet 111, it will be noted that it is provided with a flexible lead 112, connected to a commutator collar 114, which is secured to the shaft 107 but insulated therefrom, as by an insulating sleeve or hub portion 115. This commutator collar is engaged by a contact finger 116, connected to an insulating block 113, secured to the housing 17. From the contact finger 116, a conductor 117 leads to and is connected with a clutch controlling brush 118, carried by the insulating support 61 and associated with the brushes 51 to 60, hereinbefore described. Secured to the shaft 107 is a holding or brake disc 120, which is secured to a commutator or selector switch 121, which is insulated from the shaft 107 and the disc 120 by an interposed insulating disc 122. This commutator 121 includes a cylindrical metallic tube 124, provided at one end with a flange 125, by which the commutator may be connected to the insulating disc 122 carried by the holding or brake disc 120. The cylindrical tube 124 is provided with a core of insulating material 126, carrying centrally thereof a spindle 127. This spindle is connected to a plurality of radially disposed contact pins 128, the outer ends of which are located centrally of openings 130, formed spirally in the cylindrical tube 124 and serving at all times to insulate such tube from said spindle. Secured to the lower arm of the bracket 108 is a holding or brake magnet 131, similar to the clutch magnet 111, above described, and adapted to cooperate with the metallic disc 120 to arrest rotation of the shaft 107 in a manner hereinafter more particularly described. This magnet, like the magnet 111, is suitably grounded to the housing 17, as shown at $G_2$ in Fig. 8, and is connected by a conductor 132 to a holding or clutch magnet-controlling brush 134, carried by the insulating support 61 and associated with the brushes 51 to 60.

Referring to the brushes 51 to 60, it will be noted that they engage the cylindrical tube 124 and are disposed in transverse alignment with the exposed ends of the respective contact pins 128, so that first one of these pins and then the next, as considered from left to right in Fig. 8, will be engaged as the selector commutator is rotated in a counterclockwise direction. As to the brushes 118 and 134, however, it will be noted that they are so related to the cylindrical tube 124 and spindle 127 as to maintain engagement therewith, respectively, under all conditions of operation.

Secured to the upper end of the shaft 107, is a driving gear 136 which meshes with an intermediate gear 137, carried by a trunnion 138 suitably connected to the housing 17, the gear 137 being in mesh with a driving gear 140, journalled on a trunnion 141, carried by a bracket 142 suitably connected to the housing 17. The gears 136 and 140 are pivotally connected to a link or pitman 144, carrying an outwardly extending actuating arm 145, which projects through a horizontal slot 146, formed in the housing 17, the free end of the arm being provided with a dial-operating finger 147, which projects into one of the finger-receiving openings of the finger wheel 15 of the impulse transmitter. It will be noted that the link or pitman 144 is connected to the driving gears 136 and 140 at a distance from the respective centers thereof equal to the distance of the respective finger-receiving openings from the center of rotation of the finger wheel, and that the finger wheel, by reason of its being connected to the driving gears 136 and 140 in the manner described, may be caused to rotate in correspondence to the extent of rotation of the simultaneously operable driving gears 136 and 140.

As hereinbefore mentioned, the individual control buttons or switches *s* may be singularly employed in the automatic calling of complete telephone numbers, i. e. one such switch for each such number. In order that these switches may so function, a plurality of records or indices I, corresponding to a given group of telephone numbers, are provided. The records or indices are arranged in vertical and horizontal rows, and are confined to definite record areas of a record sheet 148, each such area being ruled or otherwise marked out in vertical and horizontal rows of field areas *i'* and provided with an elongated perforation or slot 149, adjacent the first vertical row of field areas at the left, as viewed in Figure 9. Here it is to be noted that the slots 149 of the respective vertical rows of indices I are in alignment, and that all of such slots are of the same length and are similarly located with respect to the several groups of adjacent field areas *i'*. Also it will be noted that the respective horizontal rows of field areas *i'* of the horizontal rows of indices I are in alignment and that the respective vertical rows of field areas of the vertical rows of indices are likewise in alignment. In making the records I, each is predetermined by a particular arrangement of a plurality of correlated perforations *i''*, the arrangement of the perforations in the two examples herein given being in accord with and corresponding respectively to Barclay 2356 and Cortlandt 4963. These perforations *i''* may be made with the aid of a suitable punch or other perforating instrument, not shown, by which the numerals, corresponding to the

successive characters—both letters and numerals—of a given telephone number, may be punched from the proper field areas $i'$. For example, if it is desired to make a record correspond to Cortlandt 4963, the numerals 2, 6, 7, 4, 9, 6 and 3 are punched out of the first, second, third, fourth, fifth, sixth and seventh horizontal rows of field areas $i'$. This order of punching is followed because the successive characters of the telephone number Cortlandt 4963 correspond to positions 2, 6, 7, 4, 9, 6 and 3 of the finger receiving openings 16 that would be successively employed in manually dialing that number.

The record sheets 148, of which there may be as many as are required to accommodate a given total of telephone numbers of interest to a subscriber, are each provided at one of its longitudinal margins with a reinforcing binder 150, having perforations adapted to receive the pins 101 of the rack 100, whereby the record sheet and consequently the record or indices provided thereon may be automatically shifted downwardly, as considered in Figs. 6 and 9, when the apparatus is set into operation to call a preselected telephone number corresponding to one of the switches $s$. Moreover, the reinforcing binder, in cooperation with the pins 101, serves to insure registration of the slots 149 with the contact bars $s1$ at all times and to likewise insure registration of the perforations $i''$ with the proper remaining contact bars $s2$, $s3$ and so on.

Carried by the cover or control panel 24, is an identification sheet 152, on which may be provided suitable indicia by which the selective switches $a$ to $j$ and the individual switches $s$ may be easily identified. As a result of easy switch-identification, the operator is enabled to quickly make a selected call, through the aid of certain of the first group of switches, or a given party call through the aid of the proper individual switch by moving it into cooperative relation to a given index, located below that switch and having its perforations $i''$ so located as to characterize it according to the telephone number of the party noted, as for example, the telephone number Cortlandt 8963 of John Doe, whose name appears, as shown in Fig. 1, adjacent to and identifies a particular individual switch.

In describing the operation of the apparatus, it will be assumed, first, that the telephone number Barclay 6844 is to be called by selective operation, that is, through the instrumentality of certain of the selective switches $a$ to $j$: and, thereafter, it will be assumed that the telephone number of "John Doe" is to be called through the operation of one of the individual or party switches $s$.

To execute the first call above mentioned, the switch 66 is closed to start the motor M, whereupon the button $b$ is depressed to move its contact finger 35 into engagement with the contact bar $b_1$. As a result of establishing contact between the contact finger 35 and the contact bar $b_1$, a circuit from the secondary winding 70 of the transformer 68 is completed by way of the conductor 71, conductor 72, cover or control panel 24, brush bar 34, contact finger 35, its associated conductor 41, commutator brush 52, cylindrical tube 124, clutch control brush 118, clutch magnet 111 and housing 17 to which said magnet and the secondary winding of the transformer are grounded. The closing of this circuit energizes the clutch magnet 111 and thereby operatively connects the motor M to the commutator shaft 107 by reason of the fact that this magnet, which is mounted in a fixed relation to the shaft 107, is clutched to the clutch disc 106 which is secured to the gear 104 through the adjacent gear 105. As soon as the shaft 107 is operatively connected to the motor M, the commutator 121 begins to rotate in a counter-clockwise direction, as viewed in Figs. 5 and 8, and likewise the driving gears 136 and 140 are rotated in a clockwise direction as viewed in Fig. 4, causing the finger 147 to move or swing in a clockwise direction as viewed in Fig. 1. The swinging movement of the finger 147 is utilized to move the finger wheel 15 a predetermined distance, namely, the distance it would ordinarily be manually moved to effect the transmittal of impulses corresponding to the character B. In limiting the movement of the finger wheel, it is, of course, necessary to deenergize the clutch magnet 111 and thereby disconnect the motor M from the shaft 117. Such deenergization takes place as soon as the commutator brush 52 disengages the cylindrical tube 124, but due to momentum of the commutator 121 and its associated rotating elements the commutator is carried, after being disconnected from the motor, a sufficient distance to establish contact between the commutator brush 52 and the second contact pin 128, as considered from the left in Fig. 8. The instant the commutator brush 52 engages said contact pin 128, a circuit is closed from the secondary winding 70 of the transformer 68 through conductor 71, conductor 72, cover or control panel 24, contact finger 35, contact bar $b_1$, conductor 41, commutator brush 52, said contact pin 128, the brake magnet 131, and the housing 17, to which said magnet and said secondary winding are grounded. The brake magnet 131, upon being energized, positively locks the shaft 117 against further forward movement and also against return movement until deenergization of the brake magnet takes place under the conditions presently stated. The operator, upon observing that the dial 15 has been limited in its clockwise movement, as viewed in Fig. 1, releases the switch $b$, thus opening the brake magnet circuit at the point of contact between the contact finger 35 and the contact bar $b_1$. As soon

as this circuit is broken and the brake magnet 131 is deenergized, the dial 15 and finger 147, together with its associated elements, are returned to their normal positions by the usual spring, not shown, of the impulse transmitter 14, the action of which spring is augmented by a tortion spring 175 connected at one end of the intermediate gear 137 and secured at its other end to the housing 17. In effecting the dialing of the remaining characters (A, R, 6, 8, 4, 4) of the telephone number Barclay 6844, switches corresponding to the characters A, R, 6, 8, 4, 4, namely, those indicated by the reference characters $b, g, f, h$ and $d$ are actuated in the order named, the latter being twice actuated in succession, inasmuch as the last two numerals of the telephone number under consideration are identical. These switches are held respectively in closed circuit position until the forward dialing movement of the finger 147 has been arrested. When depressing these buttons, the respective contact arms 35 are moved into engagement with the proper contact bars $a_1$ to $j_1$ to determine the extent of counter-clockwise movement of the commutator 121 in the manner previously described, it being noted in this connection that the contact pins 128, which cooperate with the respective commutator brushes 51 to 61, are arranged in a spiral and are, therefore, spaced at progressively varying distances from these respective brushes so that the forward dialing movement of the finger 147 will be proportional to the extent of movement of the commutator necessary to first break the circuit between a given commutator brush and the cylindrical tube 124 and then establish an electrical connection between that brush and its correlated contact pin 128. After completing the successive dialing operations necessary to transmit the desired number, the switch 66 may be opened to stop the motor M.

In considering the operation of the apparatus with respect to a party call to be made in response to one of the individual switches $s$, let it be assumed that the party to be called is "John Doe", and that the switch corresponding to that party is located fourth from the left, and second from the bottom, as viewed in Fig. 1. From an inspection of the telephone record or index appearing in Fig. 6 and corresponding to the "John-Doe-switch", it will be seen that the imaginary telephone of the party John Doe is Cortlandt 4963, the record being thus characterized by reason of the relation of the perforations $i''$ thereof. The operator, having determined the switch to be operated to call the selected party, first lifts the telephone receiver as is customary preparatory to the manual dialing of a telephone number, and then moves the selected switch downwardly into controlling position, where it is held until the dialing operation has been completed. In moving the switch downwardly, a portion of the brush 36 engages the contact bar $s_1$ through the elongated opening or slot 149 of the "John-Doe-record" I, the remaining portion of the brush being in engagement with the adjacent imperforated area of the record. Upon engagement of the brush 36 with contact bar $s_1$, the circuit of the motor M is completed by way of the conductor 64, conductor 62, contact bar $s_1$, brush 36, cover or control panel 24, conductor 72 and conductor 65. The motor M upon being set in operation so influences the governor 76 as to move the trip lever 79 to the left, as viewed in Fig. 4, thereby causing the link 84 to be retracted so as to move the worm 90 into engagement with the segmental gear 92. Upon connecting the worm 90 with the gear 92, the gears 96 and 97 are rotated in the direction of the arrows shown thereon in Fig. 2, thereby causing the rack 100 to move downwardly, carrying with it the index sheet 148. As the index sheet continues to move, portions of the brush 36 progressively engage certain of the contact bars $s_2$ to $s_{11}$ through the respective perforations $i'$, it being noted, due to the vertically spaced relations of the perforation $i''$, that the contact made through one perforation is broken before another portion of the brush engages another contact bar through the next succeeding perforation. It is during these respective contact-breaking intervals that the apparatus is conditioned for the respective succeeding dialing operations, as will hereinafter more clearly appear. As a portion of the brush 36 moves into engagement with contact bar $s_3$, which corresponds to the first character of the telephone number Cortlandt 4963, a circuit is established from the secondary winding 70 of the transformer 68, through the conductor 71, the conductor 72, the cover or control panel 24, the brush 36, the contact bar $s_3$, the conductor 41, commutator brush 52, metallic tube 124, conductor 117, clutch magnet 111, and housing 17 to which said magnet and said secondary winding are grounded. Energization of the magnet 111 operatively connects the motor M to the shaft 107, thus causing the commutator 121 to rotate in a counter-clockwise direction, as viewed in Fig. 8, and the gears 136 and 140 to rotate in a clockwise direction as viewed in Fig. 4. As the gears 136 and 140 are thus rotated, the dialing finger 147 is moved in a clockwise direction, as viewed in Fig. 1, and carries with it the dial 15. Swinging movement of the finger 147 is discontinued as soon as it has moved a predetermined distance, namely, the distance the finger wheel would be moved manually to transmit impulses corresponding to the character C. At or about the time the finger 147 has been moved to the desired extent, the commutator brush 52 disengages the metallic tube 124, thereby opening the circuit of the

clutch magnet 111. Due, however, to momentum of the commutator 121 and its associated elements, the commutator is rotated a sufficient distance to establish contact between the commutator brush 52 and the second contact pin 128, as considered from the left in Fig. 8. The instant the commutator brush 52 engages its cooperative contact pin 128, a circuit is completed from the secondary winding 70 of the transformer 68, through the conductors 71 and 72, the cover or control panel 24, the brush 36, the contact bar $s_3$, conductor 41, said commutator brush 52, said contact pin 128, the spindle 127, the brake magnet controlling brush 134, conductor 132, the brake magnet 131 and the housing 17 to which said brake magnet and said secondary winding are grounded. As the index sheet continues in its downward movement, the brush 36 is disengaged from the contact bar $s_3$, thereby opening the circuit of the brake magnet 131, whereupon the dial 15 of the impulse transmitter 14 is returned to its normal position by the usual dial-returning spring, not shown, and the gears 136 and 140, together with the actuating arm 145, are returned to their normal positions under the influence of the spring 175 associated with the driving gear 140 and augmenting the action of said dial-returning spring. Shortly after the apparatus has been thus conditioned for the next dialing operation, a portion of the brush 36 engages the contact bar $s_7$, and the dialing operation is repeated as just described, the actuating arm 145 being arrested after having moved the dial in a clockwise direction, as viewed in Fig. 1, equal to the distance such dial would be moved manually to effect the transmittal of impulses corresponding to the character O. From the description of the operation thus far, it will be understood that the succeeding dialing operations are carried out in the order of the perforations $i''$ to move the dial of the impulse transmitter the proper distance for each dialing operation. After the dialing operations, which correspond in number to the total number of characters contained in the telephone number, have been carried out, the operator releases the switch $s$, which has been maintained in closed-circuit position during the several dialing operations, whereupon the circuit of the motor M is opened, it being noted that the index sheet will have so moved as to open the circuit of the brake magnet 131, immediately prior to the release of the depressed switch, to permit the dial, together with its associated operating elements, such as the actuator arm 145 and gears 136 and 140, to return to their normal positions under the influence of the spring 175 associated with the intermediate gear 137. As the speed of the motor is reduced, the governor 76 is so actuated as to move the trip arm 79 to the right, as viewed in Fig. 4, causing the worm 90 to disengage the segmental gear 92, so as to permit the spring 95 to so actuate the gears 96 and 97 as to cause the rack 100, together with the index sheet 148, to return to its normal position.

It is to be noted that the field areas $i'$, into which the record areas are divided, are adequate in number, both with respect to the horizontal rows and the vertical rows of such field areas, to accommodate a sufficient number of perforations to take care of or effect ten dialing operations, although in each of the imaginary telephone numbers, herein assumed by way of example, only seven dialing operations are necessary. In this connection, it may be remarked that the provision of additional field areas $i'$, as herein shown, for additional perforations, is without consequence, in so far as operation of the apparatus with respect to the index-examples herein given is concerned. This is true for the reason that should a given switch be maintained in closed-circuit position after the index sheet has been so moved as to break the contact made between the brush 36 and a given contact bar through the last or uppermost perforation shown, no further dialing operation will be effected, although the motor will continue to operate so long as its circuit is maintained in a closed condition by reason of engagement of a portion of the brush 36 with the contact $s_1$ through the elongated opening or slot 149.

As shown in Fig. 9, the elongated slots 149 are so formed as to extend an appreciable distance beyond the uppermost row of field areas $i'$ of the respective record areas. This is done in order to insure a closed-circuit condition of the motor M, as between the brush 36 and the contact bar $s_1$, a sufficient length of time to permit the index sheet to so move, in cases where an index includes a maximum number of perforations, as to break the circuit of the holding magnet in completing the last dialing operation, namely, the dialing operation that would be carried out by reason of the presence of a perforation in one of the field areas $i'$ of a given uppermost row.

In order to positively limit the downward movement of the index sheet 148 after it has so moved as to break contact between the brush 36 and any one of the contact bars $s_2$ to $s_{11}$, with which the brush may engage through a perforation provided in the uppermost row of field areas of a record area, the tooth portion of the segmental gear 92 is of such length that the teeth of that gear will run out of mesh with the worm 90 at the proper instant. By thus severing the driving connection between the worm 90 and the gear 92, the last gear tooth, namely, the one appearing at the right in Fig. 5, will so cooperate with the worm as to prevent the return of the gear 92 and the index sheet to their

normal positions so long as the circuit of the motor M is closed at the point of engagement of the brush 36 with the contact bar $a_1$ through the elongated slot 149. It will be appreciated, therefore, that even though the motor circuit is maintained closed by continuing to hold the brush 36 in closed-circuit position after the last dialing operation has been carried out, no ill results will be effected, since the index sheet is arrested in its downward movement and will be so maintained until the speed of the motor, after opening the circuit thereof, has decelerated to such an extent as will enable the governor 76 to release the worm 90 from engagement with the gear 92.

Although only one form of the invention is herein shown and described, it will be understood that various changes may be made without departing from the spirit of the invention or the scope of the following claims.

What is claimed is:

1. In a telephone apparatus, an impulse transmitter adapted for successive operation in the transmittal of impulses corresponding to successive characters of a telephone number and including a rotatable finger wheel having a finger-receiving opening, actuating means for said transmitter including an arm having a finger cooperating with the finger-receiving opening of said finger wheel, character-selecting switch means, and automatically actuated means responsive to the operation of said switch means for successively controlling the operation of said impulse transmitter actuating means according to the successive characters of a telephone number.

2. In a telephone apparatus, an impulse transmitter adapted for successive operation in the transmittal of impulses corresponding to successive characters of a telephone number and including a rotatable finger wheel having a finger-receiving opening, actuating means for said transmitter including an arm having a finger cooperating with the finger-receiving opening of said finger wheel, operating means for said actuating means, character-selecting switch means, and automatically actuated means responsive to the operation of said switch means for successively connecting said operating means to said actuating means and for successively controlling the operation of said actuating means according to the successive characters of a telephone number.

3. In a telephone apparatus, an impulse transmitter adapted for successive operation in the transmittal of impulses corresponding to the successive characters of a telephone number, actuating means for said transmitter, operating means for said actuating means, manually controlled character-selecting switch means, starting means responsive to the operation of said switch means for connecting said operating means to said actuating means, and automatically actuated means for disconnecting said operating means from said actuating means at a predetermined instant in the operation of said actuating means.

4. In a telephone apparatus, an impulse transmitter adapted for successive operation in the transmittal of impulses corresponding to the successive characters of a telephone number, actuating means for said transmitter, operating means for said actuating means, manually controlled character-selecting switch means, starting means responsive to the operation of said switch means for successively connecting said operating means to said actuating means, and automatically actuated control means for definitely limiting the operation of said actuating means pursuant to the successive connections as they are effected between said operating means and said actuating means.

5. In a telephone apparatus, an impulse transmitter adapted for successive operation in the transmittal of impulses corresponding to the successive characters of a telephone number and including a rotatable finger wheel having a finger-receiving opening, actuating means for said transmitter including an arm having a finger cooperating with the finger-receiving opening of said finger wheel, operating means for said actuating means, electro-magnetic clutch means for connecting said operating means to said actuating means, manually controlled switch means operable to energize said clutch means, and control means automatically operable to deenergize said clutch means at a predetermined instant in the operation of said actuating means.

6. In a telephone apparatus, an impulse transmitter adapted for successive operation in the transmittal of impulses corresponding to the successive characters of a telephone number, actuating means for said transmitter, operating means for said actuating means, electro-magnetic clutch means for connecting said operating means to said actuating means, manually controlled switch means operable to energize said clutch means, and control means automatically operable to deenergize said clutch means at a predetermined instant in the operation of said actuating means, and automatically actuated brake means for definitely limiting the operation of said actuating means pursuant to deenergization of said clutch means.

7. In a telephone apparatus, an impulse transmitter adapted for successive operation in the transmittal of impulses corresponding to the successive characters of a telephone number, actuating means for said transmitter, operating means for said actuating means, electro-magnetic clutch means for connecting said operating means to said actuating means, manually controlled switch

means operable to energize said clutch means, control means automatically operable to deenergize said clutch means at a predetermined instant in the operation of said actuating means, automatically actuated brake means for definitely limiting the operation of said actuating means pursuant to deenergization of said clutch means, and electrically actuated means automatically operable to actuate said brake means pursuant to deenergization of said clutch means.

8. In a telephone apparatus, an impulse transmitter adapted for successive operation in the transmittal of impulses corresponding to successive characters of a telephone number, actuating means for said transmitter, operating means for said actuating means, electro-magnetic clutch means for intermittently connecting said operating means to said actuating means, whereby said transmitter is intermittently and successively operated, a plurality of normally closed switches, switch means selectively operative with respect to said switches for closing a circuit through said clutch means by way of predetermined switches, and means for opening said predetermined switches to deenergize said clutch means.

9. In a telephone apparatus, an impulse transmitter adapted for successive operation in the transmittal of impulses corresponding to successive characters of a telephone number, actuating means for said transmitter, operating means for said actuating means, electro-magnetic clutch means for intermittently connecting said operating means to said actuating means, whereby said transmitter is intermittently and successively operated, a plurality of normally closed switches, switch means selectively operative with respect to said switches for closing a circuit through said clutch means by way of predetermined switches, means for opening said predetermined switches to deenergize said clutch means, electro-magnetic brake means for limiting the operation of said actuating means pursuant, respectively, to the opening of said predetermined switches, and means cooperating with said predetermined switches pursuant, respectively, to deenergization of said clutch means to close a circuit through said brake means.

10. In a telephone apparatus, an impulse transmitter adapted for successive operation in the transmittal of impulses corresponding to successive characters of a telephone number, actuating means for said transmitter, operating means for said actuating means, electro-magnetic clutch means for intermittently connecting said operating means to said actuating means, whereby said transmitter is intermittently and successively operated, a plurality of normally closed switches corresponding to given characters of a telephone number, a plurality of contact elements respectively connected to said switches, switch means selectively operative with respect to said contact elements for closing a circuit through said clutch means by way of predetermined contact elements and corresponding switches, and means for opening said predetermined switches to deenergize said clutch means.

11. In a telephone apparatus, an impulse transmitter adapted for successive operation in the transmittal of impulses corresponding to successive characters of a telephone number, actuating means for said transmitter, operating means for said actuating means, electro-magnetic clutch means for intermittently connecting said operating means to said actuating means, whereby said transmitter is intermittently and successively operated, a plurality of normally closed switches corresponding to given characters of a telephone number, a plurality of contact elements respectively connected to said switches, switch means selectively operative with respect to said contact elements for closing a circuit through said clutch means by way of predetermined contact elements and corresponding switches, means for opening said predetermined switches to deenergize said clutch means, electro-magnetic brake means for limiting the operation of said actuating means pursuant, respectively, to the opening of said predetermined switches, and means cooperating with said predetermined switches pursuant, respectively, to deenergization of said clutch means to close a circuit through said brake means.

12. In a telephone apparatus, an impulse transmitter adapted for successive operation in the transmittal of impulses corresponding to successive characters of a telephone number, actuating means for said transmitter, operating means for said actuating means, character-selecting switch means, an index movable relatively to said switch means and depending upon such movement to render said switch means selectively operable, and automatically actuated means responsive to the selective operation of said switch means for successively controlling the operation of said actuating means according to the successive characters of a telephone number.

13. In a telephone apparatus, an impulse transmitter adapted for successive operation in the transmittal of impulses corresponding to successive characters of a telephone number, actuating means for said transmitter, operating means for said actuating means, character-selecting switch means, an index movable relatively to said switch means and depending upon such movement to render said switch means selectively operable, and automatically actuated means responsive to the selective operation of said switch means for successively

connecting said operating means to said actuating means and for successively controlling the operation of said actuating means according to the successive characters of a telephone number.

14. In a telephone apparatus, an impulse transmitter adapted for successive operation in the transmittal of impulses corresponding to successive characters of a telephone number, actuating means for said transmitter, operating means for said actuating means, character-selecting switch means, an index movable relatively to said switch means and depending upon such movement to render said switch means selectively operable, and electro-magnetic clutch means responsive to the selective operation of said switch means for successively controlling the operation of said actuating means according to the successive characters of a telephone number.

15. In a telephone apparatus, an impulse transmitter adapted for successive operation in the transmittal of impulses corresponding to successive characters of a telephone number, actuating means for said transmitter, operating means for said actuating means, character-selecting switch means, an index movable relatively to said switch means and depending upon such movement to render said switch means selectively operable, and electro-magnetic clutch means responsive to the selective operation of said switch means for successively connecting said operating means to said actuating means and for limiting the successive operations of said actuating means according to the successive characters of a telephone number.

16. In a telephone apparatus, an impulse transmitter adapted for successive operation in the transmittal of impulses corresponding to successive characters of a telephone number, actuating means for said transmitter, operating means for said actuating means, a plurality of contact elements, character-selecting switch means, a perforated index movable intermediate said switch means and said contact elements and depending upon such movement to render said switch means selectively operable, and automatically actuated means associated with said contact elements and responsive to the selective operation of said switch means for successively controlling the operation of said actuating means according to the successive characters of a telephone number.

17. In a telephone apparatus, an impulse transmitter adapted for successive operation in the transmittal of impulses corresponding to successive characters of a telephone number, actuating means for said transmitter, operating means for said actuating means, a plurality of contact elements, character-selecting switch means, a perforated index movable intermediate said switch means and said contact elements and depending upon such movement to render said switch means selectively operable, and automatically actuated means associated with said contact elements and responsive to the selective operation of said switch means for successively connecting said operating means to said actuating means and for successively controlling the operation of said actuating means according to the successive characters of a telephone number.

18. In a telephone apparatus, an impulse transmitter adapted for successive operation in the transmittal of impulses corresponding to successive characters of a telephone number, actuating means for said transmitter, operating means for said actuating means, a pluralty of contact elements, character-selecting switch means, a perforated index movable intermediate said switch means and said contact elements and depending upon such movement to render said switch means selectively operable, and electro-magnetic clutch means associated with said contact elements and responsive to the selective operation of said switch means for successively connecting said operating means to said actuating means according to the successive characters of a telephone number.

19. In a telephone apparatus, an impulse transmitter adapted for successive operation in the transmittal of impulses corresponding to successive characters of a telephone number, actuating means for said transmitter, operating means for said actuating means, a plurality of contact elements, character-selecting switch means, a perforated index movable intermediate said switch means and said contact elements and depending upon such movement to render said switch means selectively operable, and electro-magnetic clutch means associated with said contact elements and responsive to the selective operation of said switch means for successively connecting said operating means to said actuating means and for limiting the successive operation of said actuating means according to the successive characters of a telephone number.

20. In a telephone apparatus, an impulse transmitter adapted for successive operation in the transmittal of impulses corresponding to successive characters of a telephone number, actuating means for said transmitter, operating means for said actuating means, a plurality of contact elements, character-selecting switch means, a perforated index movable intermediate said switch means and said contact elements and adapted to render said switch means selectively operable, automatically actuated means associated with said contact elements and responsive to the selective operation of said switch means for successively controlling the operation of said actuating means according to the successive characters of a telephone number, and means

automatically operative to progressively move said index during the transmittal of impulses corresponding to successive characters of a telephone number and for returning said index to its normal position pursuant to the transmittal of the last impulse of the last character of a telephone number.

21. A device for operating the manually rotatable disk of the dial of a telephone comprising a keyboard having keys corresponding to the dial markings, means for securing the keyboard in operative relation to the telephone dial, and means operated by the keys and operatively connected to the dial operating disk of the telephone for imparting rotary movement to said disk.

In testimony whereof, we have affixed our signatures to this specification.

AARON WM. LEVY,
PEARL L. WISE,
*Executor and Executrix, respectively, of the Estate of Nathan Wise, Deceased.*