July 4, 1967 H. C. EHLERT 3,329,214

FULL-OPENING WELL TOOL

Filed Feb. 25, 1965 2 Sheets-Sheet 1

Fig. 2A

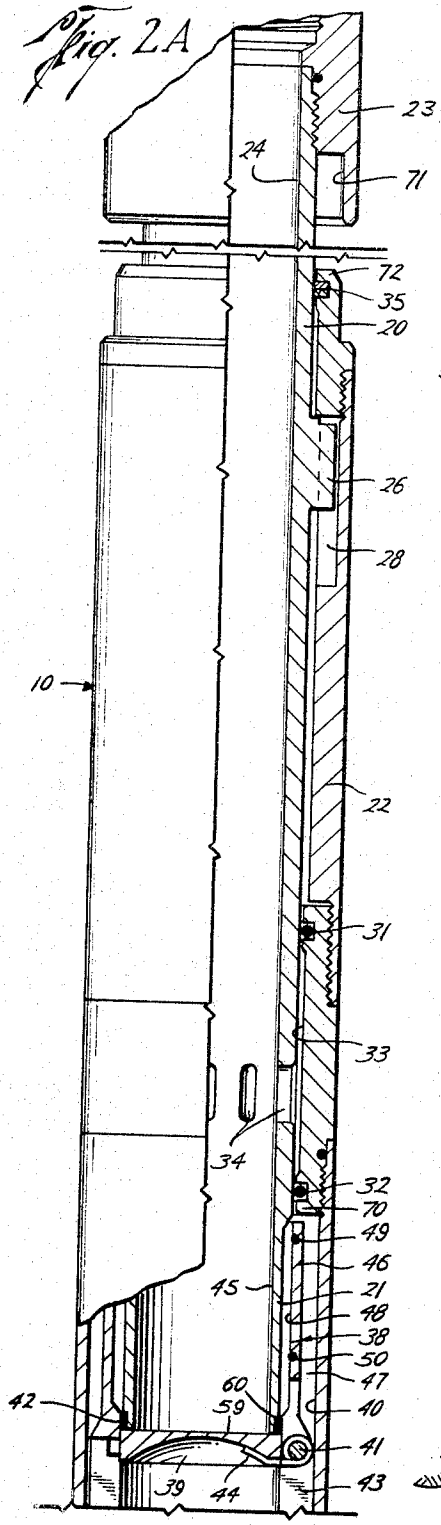

Fig. 2B

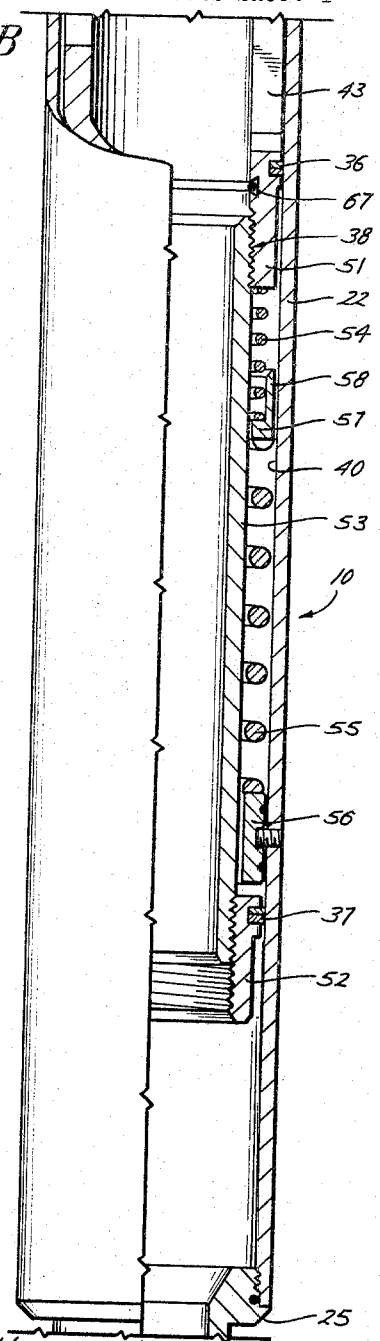

Fig. 1

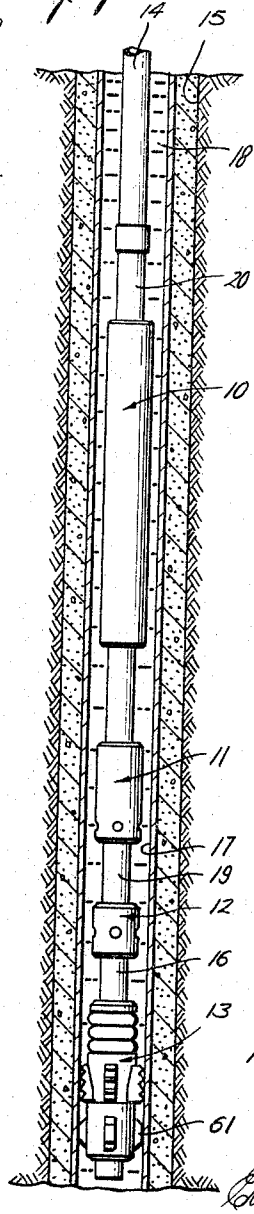

Harry C. Ehlert
INVENTOR.

BY Robert K. Richambeau Jr.
ATTORNEY

July 4, 1967 H. C. EHLERT 3,329,214

FULL-OPENING WELL TOOL

Filed Feb. 25, 1965 2 Sheets-Sheet 2

Fig. 3A

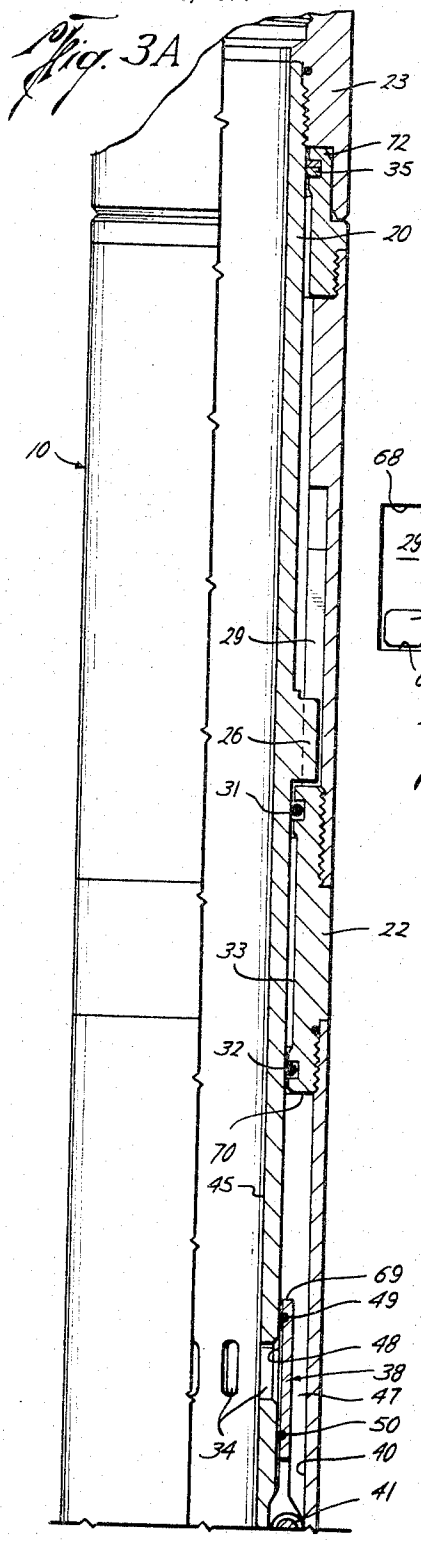

Fig. 4

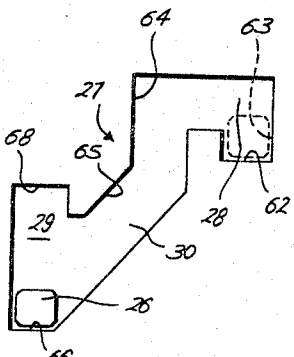

Fig. 3B

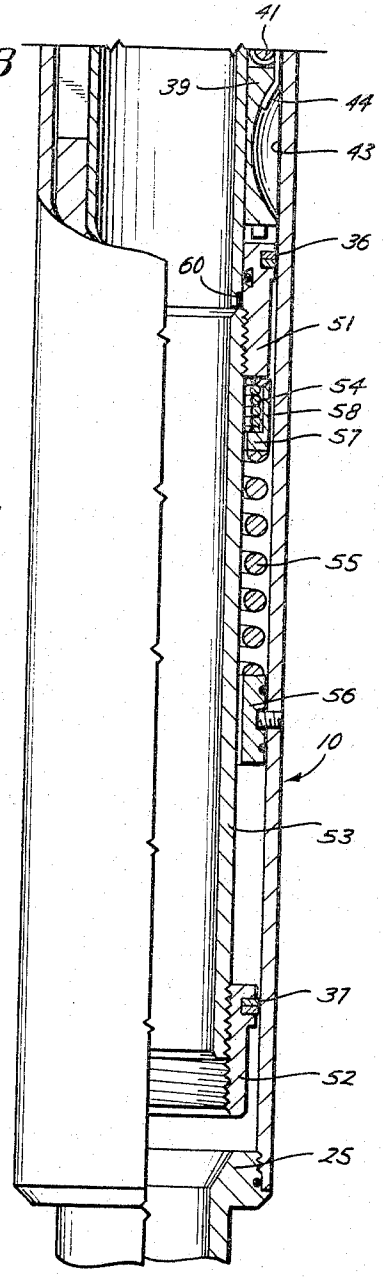

Harry C. Ehlert
INVENTOR.

BY Ernest R. Archambeau Jr.
ATTORNEY

United States Patent Office

3,329,214

Patented July 4, 1967

3,329,214

FULL-OPENING WELL TOOL

Harry C. Ehlert, Houston, Tex., assignor to Schlumberger Technology Corporation, Houston, Tex., a corporation of Texas

Filed Feb. 25, 1965, Ser. No. 435,205
15 Claims. (Cl. 166—226)

ABSTRACT OF THE DISCLOSURE

This disclosure is directed to a so-called "full bore" well tool having inner and outer telescoped members and a central axial passage therethrough that is normally closed by a flapper valve pivotally mounted on a tubular carrier slidably disposed in the outer member just below the lower end of the inner member. By supporting this carrier on two stacked springs of unequal spring rates, the combined spring force will hold the flapper valve sealed against the lower end of the inner member and allow the flapper valve and carried to move with the inner member until it has been moved to a position that any pressure differential across the valve can be equalized. Once this position has been reached, the weaker spring is overcome and continued downward movement of the inner member will shift the carrier upwardly so the lower end of the inner member can enter the carrier and pivot the flapper valve to its open position.

Accordingly, as will subsequently become apparent, this invention relates to well tools; and, more particularly, pertains to well tools capable of performing repetitive testing or treating operations as well as being selectively operable to provide an unrestricted central passage therethrough.

It is customary to dependently couple a number of different full-bore tools from a tubing string for performing such operations as testing a formation under flowing or static conditions, squeeze cementing, acidizing or fluid-fracturing. Such a string of full-bore tools usually includes a full-bore packer for packing-off the well bore to remove the hydrostatic pressure of the well control fluid from the formations below where the packer is set. In a number of these operations, it is preferred that the lower end of the tubing string be closed above the packer to prevent fluids in the well bore from entering the tubing string as the tools are being positioned. Thus, by keeping the tubing string "dry," it will be unnecessary to remove fluids from the tubing by swabbing or gas displacement before testing or completion operations can be started. Moreover, by selectively closing the lower end of the tubing string, treating fluids can be placed in the tubing string and selectively discharged below the packer without becoming contaminated by fluids in the well as the tools are being shifted from one position to another.

In addition to selectively controlling fluid communication, it is particularly desirable to have a tool so versatile that it can also be opened to leave an unrestricted longitudinal passage large enough to pass various completion tools as well as high flows of fracturing fluids. Although various tools having a full-opening passage have been used heretofore, such tools normally employ either a removable center section or else a flapper valve that must be opened against the full differential pressure across the tool. In addition to being more complex, tools with removable center sections require special retrieving equipment and the center sections must be replaced to reclose the central passage. On the other hand, although those tools using pivoted flapper valves are less complex and can be reclosed when desired, it is not uncommon that

these valves are damaged when opened against extreme differential pressures.

Accordingly, it is an object of the present invention to provide new and improved full-opening tools that are selectively operable to control fluid communication through a tubing string as well as capable of being easily opened against high pressure differentials to leave an unrestricted passage therethrough.

This and other objects of the present invention are obtained by telescopically arranging an inner tubular member having a lateral port within an outer tubular housing, with the inner member having an annular valve seat on its lower end and being movable between an extended and a telescoped position for respectively closing and opening fluid communication between the inner and outer members through the port. A tubular member supported on yieldable biasing means and carrying a pivoted valve element is slidably mounted within the housing, with the lower end of the inner member extending into the tubular member and normally seated with the valve element. Whenever the inner member is moved toward its telescoped position, the valve carrier will shift against the biasing means and the valve element remains closed until fluid communication is opened through the lateral port to reduce the fluid pressure differential across the valve element. Once the pressure differential across the valve element has been substantially reduced, the carrier will be halted by the yieldable biasing means and the inner member will then pass through the carrier to open the valve element.

The novel features of the present invention are set forth with particularity in the appended claims. The present invention, both as to its organization and manner of operation together with further objects and advantages thereof, may best be understood by way of illustration and example of a certain embodiment when taken in conjunction with the accompanying drawings, in which:

FIG. 1 shows a string of well tools, including a tool of the present invention, as they may appear within a well bore;

FIGS. 2A and 2B are successive elevational views showing an embodiment of a tool incorporating the principles of the present invention;

FIGS. 3A and 3B are successive elevational views showing the tool of FIG. 2 in another operating position; and

FIG. 4 is a schematic representation of a control slot showing the position of a mandrel lug therein.

Turning now to FIG. 1, a number of full-bore well tools **10–13** are shown tandemly connected to one another and dependently coupled from the lower end of a tubing string **14** in a cased well bore **15**. At the lower end of these tools, a conventional full-bore packer **13** is arranged for selectively packing-off the well bore **15**. A conventional hydraulic holddown **12** is coupled to the mandrel **16** of the packer **13** and arranged to engage the casing **17** to secure the mandrel against upward movement whenever the packer is set and the pressure within the tubing string **14** exceeds the hydrostatic pressure of the control fluid **18** in the well bore **15**. A typical bypass valve **11** coupled by a tubing sub **19** above the holddown **12** is suitably arranged to be opened to facilitate shifting the tools **10–13** within the fluid-filled well bore **15** by diverting a substantial portion of the fluids **18** through the central bore of the retracted packer **13**. Connected at the upper end of this string of tools **10–13** is a tool **10** incorporating the principles of the present invention.

Turning now to FIGS. 2 and 3, successive elevational views, partially in cross-section, are shown of an embodiment of a tool **10** that employs the principles of the present invention. The full-bore tool **10** includes the movable tubular mandrel **20** that has a short, reduced-diam-

eter lower portion **21** and is telescopically disposed and arranged for selective telescopic movement within a tubular housing **22**. A coupling **23** at the upper end of the mandrel **20** is provided for coupling to a tubing string (not shown), with the central bore **24** of the mandrel being substantially the same diameter as that of the tubing string. Similarly, the lower end **25** of the housing **22** is arranged for coupling to another well tool such as the full-bore packer **13** shown in FIG. 1.

For controlling the longitudinal positions of the mandrel **20** relative to the housing **22**, an outwardly projecting lug **26** on the mandrel is slidably received within a somewhat S-shaped slot system **27** formed in the internal wall of the housing. As seen in FIG. 4, the slot system **27** is comprised of two staggered longitudinal slots **28** and **29** that are angularly spaced from one another and connected by an inclined slot portion **30**. Thus, by manipulating the lug **27** from one slot **28**, **29** into the other, the mandrel **20** may be shifted relative to the housing **22** into the operating positions shown in FIGS. 2 and 3.

Spaced O-rings **31** and **32** are disposed around an inwardly directed surface **33** in the housing **22** to fluidly seal the mandrel **20** to the housing. Lateral ports **34** in the mandrel **20** are arranged to be between the O-rings **31** and **32** whenever the mandrel is in its elevated position (FIG. 2) and below the O-rings whenever the mandrel is in its telescoped position (FIG. 3). Wiper rings **35–37**, which do not necessarily fluidly seal, are provided where necessary to prevent foreign matter from collecting in close-fitting spaces.

A tubular member **38** carrying a pivotally mounted flapper valve **39** is slidably disposed in the lower portion of the central bore **40** of the housing **22** and arranged to travel therein between the positions illustrated in FIGS. 2 and 3. The flapper valve **39** is pivotally mounted by a transverse pin **41** to one side of the carrier **38** and is arranged to be swung downwardly therein from a horizontal annular valve seat **42** on the lower end of the mandrel **20** into a vertical sidewall recess **43** in the carrier immediately below the pivot pin. A spring **44** is suitably arranged to normally bias the valve **39** upwardly into a horizontal position where it sealingly engages the valve seat **42** and blocks the lateral passage **45** through the mandrel **20**.

The upper portion **46** of the carrier **38** above the flapper valve **39** is reduced in diameter to provide an annular space **47** between the carrier and housing **22**. The central bore **48** of the upper carrier portion **46** is sized to be the same as that of the inwardly directed, housing surface **33** thereabove. Spaced O-rings **49** and **50** are mounted around the central bore **48** for fluidly sealing the mandrel ports **34** whenever the mandrel **20** is shifted into its telescoped position shown in FIG. 3.

The lower portion of the valve carrier **38** is comprised of spaced, enlarged-diameter portions **51** and **52** which align the carrier within the housing **22** and are connected by a reduced-diameter tubular member **53** which extends through a stack of coil springs **54** and **55**. The lowermost spring **55** is farily strong and rests on an internal housing shoulder **56** above the enlarged portion **52** with its upper end supporting an annular member **57** having an upright skirt portion **58**. The uppermost spring **54** is weaker than the spring **55** and is received within the skirt portion **58** of the annular member **57** and is engaged with the underside of the upper enlarged-diameter portion **51**.

In its extended position as shown in FIG. 2, the mandrel **20** is disposed relative to the housing **22** in such a manner that the lateral ports **34** are between the spaced sealing rings **31** and **32** in the surface **33** in the central portion of the housing. It will be appreciated that the stacked springs **54** and **55** support the carrier **38** and urge it upwardly to maintain the upper surface **59** of the closed flapper valve **39** against the valve seat **42** conveniently carried in an external groove **60** around the lower end of the reduced-diameter mandrel portion **21** whenever

the mandrel **20** is in its elevated position (FIG. 2). By choosing an upper coil spring **54**, however, that is weaker than the spring **44** holding the flapper valve **39** closed, it will be appreciated that although the coil springs **54** and **55** support the carrier **38**, the carrier will not be urged upwardly with such force that it will force the lower mandrel end through the carrier and open the flapper valve against spring **44**.

Turning now to the operation of the tool **10**, the tool is initially disposed in its extended position as shown in FIG. 2. As the tool **10** is being lowered into a well bore **15**, the frictional restraint of the drag blocks **61** on the packer **13** (FIG. 1) will hold the tool housing **22** upwardly so that the mandrel lug **26** will engage the lower shoulder **62** (as shown by the dashed lines at **63** in FIG. 4) in the longitudinal slot **28** and transmit the downward force to the housing. Although the mandrel **20** is urged downwardly against the flapper valve **39**, the upper coil spring **54** will be compressed so that the carrier **38** will "float" relative to the housing **22** and the flapper valve will remain closed.

By arranging the slot system **27** to be similar to that (not shown) on the packer **13**, the packer will be set first to secure the tool housing **22** relative to the casing **17** by picking up and torquing the tubing string **14** to the right, and then slacking-off the weight of the tubing string. This will shift the mandrel lug **26** to the vertical shoulder **64** in the slot system **27** so that once the packer **13** is set, the continued downward force will shift the mandrel lug downwardly along the inclined shoulder **65** in slot portion **30** to the bottom shoulder **66** of slot **29**.

As the mandrel **20** travels downwardly toward the telescoped position illustrated in FIG. 3, the carrier **38** will initially remain stationary until the weaker upper string **54** is compressed to engage the carrier shoulder **51** with the skirt **58** of the annular member **57** which then transmits the full downward force to the lower spring **55**. Then, as the mandrel **20** is forced further downwardly, the carrier **38** will be shifted downwardly to begin compressing the stouter lower spring **55**. The downward travel of the mandrel **20** will soon shift the lateral ports **34** below the lower sealing ring **32** and admit fluid from below the closed flapper valve **39** into the central bore **24** of the mandrel. Whenever the pressure differential across the flapper valve **39** has been greatly reduced, the downward force of the mandrel **20** will be sufficient to open the flapper valve **39** against the spring **44** as the stouter coil spring **55** shifts the carrier **38** upwardly relative to the mandrel.

It will be appreciated that as the mandrel **20** first begins traveling downwardly and has compressed the upper spring **54**, there will be an upwardly directed force acting on the flapper valve **39** tending to hold it seated against the valve seat **42** on the lower mandrel end. This upwardly directed force will be the combination of the force applied by the pressure differential across the valve **39** and the force applied by the valve spring **44**. Since the lower spring **55** tends to move the carrier **38** upwardly with respect to the mandrel **20**, its net effect is to oppose the upwardly directed force on the valve **39** which thereby reduces the force required to open the valve. Thus, by selecting a particular spring rate for the lower spring **55**, the valve **39** can be arranged to remain closed until the pressure across it has dropped below a predetermined magnitude.

Once the carrier **38** has shifted upwardly relative to the mandrel **20**, the lower portion **21** of the mandrel will open the flapper valve **39** and move downwardly into the position illustrated in FIG. 3. In this telescoped position, the flapper valve **39** has been pivoted into the sidewall recess **43** and the lower mandrel portion **21** is sealingly received within an O-ring **67** in the carrier shoulder **51** below the sidewall recess **43**. Also the lateral ports **34** in the mandrel **20** will be sealingly disposed between the spaced O-rings **31** and **32** in the upper portion **46** of the

carrier **38**. Thus, in this telescoped position, an unrestricted opening has been provided through the tool **10** to admit various completion tools (not shown) as well as large volumes of treating materials.

Should it be desired to momentarily close the tool **10**, the flapper valve **39** is returned to its closed position by picking up the mandrel **20** to shift the mandrel lug **26** against the shoulder **68** at the top of the slot **29**. As the mandrel **20** moves upwardly, the carrier **38** will be halted when its upper end **69** engages a housing shoulder **70**. As the mandrel **20** continues upwardly, the lower mandrel portion **21** will clear the sidewall recess **43** and permit the flapper valve **39** to again close over the valvet seat **42** on the lower end of the mandrel.

The flapper valve **39** can, of course, be opened by again applying weight on the mandrel **20** that is sufficient to overcome whatever pressure differential there may be acting across the flapper valve **39** in the manner already described. Accordingly, it will be appreciated that the tool **10** depicted in FIGS. 2 and 3 is capable of being repeatedly opened and closed as many times as it is desired without applying excessive force on the pivot pin **41**.

It should also be noted that by arranging a downwardly facing recess **71** in the bottom of the coupling **23** to receive the upper end **72** of the housing **22**, fluids in the well bore will be trapped as the mandrel **20** is moving downwardly. Thus, somewhat of a "shock absorber" action will be provided.

Accordingly, it will be appreciated that the tool **10** is capable of being selectively opened and closed to provide fluid communication from the tubing string into the well bore below the tool. Moreover, a full-opening passage can be opened through the tool **10** whenever it is desired to admit a completion tool or a large volume of treating materials. Although a flapper valve is employed to provide a full-opening central passage, the combination of the seletcively opened equalizing passages with the floating carrier will permit the valve to be opened with a minimum of effort.

While a particular embodiment of the present invention has been shown and described, it is apparent that changes and modifications may be made without departing from this invention in its broader aspects; and, therefore, the aim in the appended claims is to cover all such changes and modifications as fall within the true spirit and scope of this invention.

What is claimed is:

1. In a well tool adapted for connection in a string of pipe in a well bore: means for isolating a portion of a well bore including a tubular member having a passage therethrough and packing means adapted for expansion into sealing engagement between said tubular member and a well bore; means for selectively controlling communication through said passage including valve means connected to said tubular member and movable between a normal passage-closing position and an open position; and means responsive to movement of a string of pipe and a predetermined pressure differential across said closed valve means for moving said valve means to said open position.

2. In a well tool adapted for connection in a string of pipe in a well bore: means for isolating a portion of a well bore including a tubular member having a passage therethrough and packing means adapted for expansion into sealing engagement between said tubular member and a well bore; means for selectively controlling communication through said passage including valve means connected to said tubular member and movable between a normal passage-closing position and an open position; normally-closed bypass means around said valve means and responsive to movement of a string of pipe for reducing the pressure differential across said closed valve means; and means responsive to movement of a string of pipe and a predetermined pressure differential across said closed valve means for moving said valve means to said open position.

3. In a well tool adapted for connection in a string of pipe in a well bore: means for isolating a portion of a well bore including a tubular member having a passage therethrough and packing means adapted for expansion into sealing engagement between said tubular member and a well bore; valve means for selectively controlling communication through said passage including a valve carrier movably connected to said tubular member and movable in relation thereto from a first position to a second position, an annular valve seat movably disposed in said tubular member, a valve member pivotally mounted on one side of said valve carrier, and means normally urging said valve member into seating engagement on said valve seat for closing said passage; means responsive to movement of a string of pipe for moving said valve carrier to said second position; and means actuated by movement of said valve carrier to said second position for moving said valve member to an open position in response to a predetermined pressure differential across said closed valve member.

4. In a well tool adapted for connection in a string of pipe in a well bore: means for isolating a portion of a well bore including a tubular member having a passage therethrough and packing means adapted for expansion into sealing engagement between said tubular member and a well bore; valve means for selectively controlling communication through said passage including a valve carrier movably connected to said tubular member and movable in relation thereto from a first position to a second position, an annular valve seat movably disposed in said tubular member, a valve member pivotally mounted on one side of said valve carrier, and means urging said valve member into seating engagement on said valve seat for closing said passage; first means responsive to movement of a string of pipe for moving said valve carrier to said second position; second means actuated by movement of said valve carrier to said second position and adapted to move said valve member to an open position in response to a predetermined reduced pressure differential across said closed valve member; and normally-closed bypass means around said valve means and responsive to said movement of a string of pipe for reducing the pressure differential across said valve means when closed so said second means can move said valve member to said open position.

5. In a well tool adapted for connection in a string of pipe in a well bore: means for isolating a portion of a well bore including a tubular member and packing means therearound, said packing means being expandable into sealing engagement between said tubular member and a well bore; and means for selectively controlling communication between an isolated well bore portion and a pipe string including a tubular housing member, a tubular body member telescopically received in said housing member and having means on one end thereof defining an annular valve seat, said telescoped members being movable in relation to one another between expanded and contracted positions, one of said telescoped members being connected to said tubular member of said isolating means, and the other of said telescoped members being adapted for connection in a string of pipe, a valve carrier slidably mounted in said housing member adjacent to said one end of said body member and adapted to pass said one end of said body member, a valve member pivotally mounted on one side of said valve carrier and normally seated on said valve seat, said valve carrier and valve member being movable by said body member in one direction as said telescoped members are moved toward said contracted position, normally-closed bypass means for controlling fluid communication across said valve seat, said bypass means opening as said telescoped members are moved toward said contracted position, and means operative in response to a predetermined pressure differential between an iso-

lated well bore portion and a pipe string after said telescoped members have reached said contracted position for moving said valve carrier in an opposite direction past said one end of said body member to unseat said valve member.

6. In a well tool adapted for connection in a string of pipe in a well bore: means for isolating a portion of a well bore including a tubular member and packing means therearound, said packing means being expandable into sealing engagement between said tubular member and a well bore; and means for selectively controlling fluid communication between an isolated well bore portion and a pipe string disposed in a well bore including a tubular housing member, a tubular body member telescopically received in said housing member and having means on one end thereof defining an annular valve seat, said telescoped members being movable in relation to one another between expanded and contracted positions, one of said telescoped members being connected to said tubular member of said isolating means, and the other of said telescoped members being adapted for connection in a string of pipe, a valve carrier slidably mounted in said housing member adjacent to said one end of said body member and adapted to accommodate said one end of said body member, a valve member pivotally mounted on one side of said valve carrier and normally seated on said valve seat, said valve carrier and valve member being movable by said body member in one direction as said telescoped members are moved toward said contracted position, normally-closed bypass means for controlling fluid communication across said valve seat, said bypass means opening as said telescoped members are moved toward said contracted position, and resilient means between said housing member and said valve carrier, said resilient means being operative after said telescoped members have reached said contracted position for moving said valve carrier in an opposite direction to pass said valve carrier beyond said one end of said body member and unseat said valve member when a predetermined pressure differential exists between an isolated well bore portion and a pipe string.

7. In a well tool adapted for use in a well bore: a tubular housing member; a tubular body member telescopically received in said housing member, said members being adapted for connection in a string of pipe and movable in relation to one another between expanded and contracted positions, a valve carrier slidably mounted in said housing member adjacent to one end of said body member and adapted to pass said one end of said body member; a valve member pivotally mounted on one side of said valve carrier and normally seated on said one end of said body member, said valve carrier and valve member being movable by said body member in one direction as said telescoped members are moved toward said contracted position, normally-closed bypass means for controlling fluid communication across said seated valve member, said bypass means opening as said telescoped members are moved toward said contracted position; and means operative in response to a predetermined pressure differential across said seated valve member after said telescoped members have reached said contracted position for moving said valve carrier in an opposite direction to pass said valve carrier beyond said one end of said body member and unseat said valve member.

8. In a well tool adapted for use in a well bore; a tubular housing member; a tubular body member telescopically received in said housing member and including means defining a valve seat around its inner end, said members being adapted for connection in a string of pipe and movable in relation to one another between expanded and contracted positions, a valve carrier slidably mounted in said housing member adjacent to said body member; a valve member pivotally mounted on one side of said valve carrier and normally seated on said valve seat, said valve carrier and valve member being movable by said body member in one direction as said telescoped members are moved toward said contracted position; normally-closed bypass means for controlling fluid communication across said valve seat, said bypass means opening as said telescoped members are moved toward said contracted position; and resilient means between said housing member and said valve carrier operative after said telescoped members have reached said contracted position for moving said valve carrier in an opposite direction in response to a predetermined pressure differential across said seated valve member and unseating said valve member as said valve carrier moves in said opposite direction.

9. In a well tool adapted for use in a well bore: a tubular housing member; a tubular body member having one end telescopically received in said housing member, an annular valve seat on said one end of said body member, said members being adapted for connection in a string of pipe and movable in relation to one another between expanded and contracted positions, a valve carrier slidably mounted in said housing member adjacent to said one end of said body member adapted to pass said one end of said body member; a valve member pivotally mounted on one side of said valve carrier and normally seated on said valve seat, said valve carrier and valve member being movable by said body member in one direction as said telescoped members are moved toward said contracted position; bypass means including a port in said body member and means fluidly sealing said port when said telescoped members are in said expanded position for preventing fluid communication through said port until said telescoped members are moved to a location intermediate of said positions to provide fluid communication through said port and across said valve seat; resilient means between said housing member and said valve carrier operative after said telescoped members have reached said contracted positions for moving said valve carrier in an opposite direction when a predetermined pressure differential exists across said seated valve member to pass said valve carrier beyond said end of said one body member and unseat said valve member.

10. In a well tool adapted for use in a well bore: a tubular housing member; a tubular body member having one end defining an annular valve seat and telescopically received in said housing member, said members being adapted for connection in a string of pipe and movable in relation to one another between expanded and contracted positions, a valve carrier slidably mounted in said housing member adjacent to said one end of said body member and adapted to receive said one end of said body member; a valve member pivotally mounted on one side of said valve carrier and normally seated on said valve seat, said valve carrier and valve member being movable by said body member in one direction as said telescoped members are moved toward said contracted position; bypass means including a port in said body member and means fluidly sealing said port when said telescoped members are in said expanded position for preventing fluid communication through said port until said telescoped members are moved to a location intermediate of said positions to provide fluid communication through said port and across said valve seat; resilient means between said housing member and said valve carrier operative after said telescoped members have reached said contracted positions for moving said valve carrier in an opposite direction when a predetermined pressure differential exists across said seated valve member to pass said valve carrier over said end of said body member and unseat said valve member; and means for closing said port when said telescoped members are in said contracted position.

11. In a well tool adapted for use in a well bore: a tubular housing member; a tubular body member having one end defining an annular valve seat and telescopically received in said housing member, said members being adapted for connection in a string of pipe and movable in relation to one another between expanded and con-

tracted positions, a valve carrier slidably mounted in said housing member adjacent to said one end of said body member and adapted to receive said one end of said body member; a valve member pivotally mounted on one side of said valve carrier and normally seated on said valve seat, said valve carrier and valve member being movable by said body member in one direction as said telescoped members are moved toward said contracted position; first resilient means having a predetermined force normally urging said valve member in an opposite direction onto said valve seat; bypass means including a port in said body member and means fluidly sealing said port when said telescoped members are in said expanded position for preventing fluid communication through said port until said telescoped members are moved to a location intermediate of said positions to provide fluid communication through said port and across said valve seat; second resilient means having a predetermined force greater than that of said first resilient means between said housing member and said valve carrier, said second resilient means becoming operative after said telescoped members have reached said contracted position to overpower said first resilient means and move said valve carrier in said opposite direction whenever a predetermined pressure differential exists across said seated valve member to pass said valve carrier over said end of said body member and unseat said valve member.

12. In a well tool adapted for use in a well bore: a tubular housing member; a tubular body member having one end defining a first annular valve seat and telescopically received in said housing member, said members being adapted for connection in a string of pipe and movable in relation to one another between expanded and contracted positions; a valve carrier slidably mounted in said housing member adjacent to one end of said body member, said valve carrier being adapted to receive said body member and having a second annular valve seat adapted to receive said one end of said body member; a valve member pivotally mounted on one side of said valve carrier adapted to seat on said first valve seat, said valve carirer and valve member being movable by said body member in said one direction as said telescoped members are moved toward said contracted position; first resilient means having a predetermined force normally urging said valve member in an opposite direction onto said first valve seat; bypass means including a port in said body member and means fluidly sealing said port when said telescoped members are in said expanded position for preventing fluid communication through said port until said telescoped members are moved to a location intermediate of said positions to provide fluid communication through said port and across said first valve seat; second resilient means having a predetermined force greater than that of said first resilient means between said housing member and said valve carrier, said second resilient means becoming operative after said telescoped members have reached said contracted position whenever a predetermined pressure differential exists across said seated valve member to overpower said first resilient means and move said valve carrier in said opposite direction to pass said valve carrier over said one end of said body member and unseat said valve member and bring said second valve seat into engagement with said one end of said body member.

13. In a well tool adapted for use in a well bore: a tubular housing member; a tubular body member having one end defining an annular valve seat and telescopically received in said housing member, said members being adapted for connection in a string of pipe and movable in relation to one another between expanded and contracted positions; a valve carrier slidably mounted in said housing member adjacent to said one end of said body member and adapted to receive said one end of said body member; a valve member pivotally mounted on one side of said valve carrier and adapted to seat on said valve seat, said valve carrier and valve member being movable by said body member in said one direction as said telescoped members are moved toward said contracted position; first resilient means having a predetermined force normally urging said valve member in an opposite direction onto said valve seat; bypass means including a port in said body member and means fluidly sealing said port when said telescoped members are in said expanded position for preventing fluid communication through said port until said telescoped members are moved to a location intermediate of said positions to provide fluid communication through said port and across said valve seat; second resilient means having a predetermined force greater than that of said first resilient means between said housing member and said valve carrier, said second resilient means becoming operative after said telescoped members have reached said contracted position whenever a predetermined pressure differential exists across said seated valve member to overpower said first resilient means and move said valve carrier in said opposite direction to pass said valve carrier over said one end of said body member to unseat said valve member; means fluidly sealing said one end of said body member when said valve carrier has passed over said one end of said body member; and means on said valve carrier for fluidly sealing said port when said telescoped members are in said contracted position.

14. In a well tool adapted for use in a well bore: a tubular housing member; a tubular body member having means on one end defining an annular valve seat, said one end of said body member being telescopically received in said housing member, said members being adapted for connection in a string of pipe and movable in relation to one another between expanded and contracted positions; a valve carrier slidably mounted in said housing member adjacent to said one end of said body member, said valve carrier being adapted to receive said one end of said body member; a valve member pivotally mounted on one side of said valve carrier and adapted to seat on said valve seat, said valve carrier and valve member being movable by said body member in said one direction as said telescoped members are moved toward said contracted position; first spring means having a predetermined spring rate normally biasing said valve member in an opposite direction onto said valve seat; bypass means including a port in said body member and means fluidly sealing said port when said telescoped members are in said expanded position for preventing fluid communication through said port until said telescoped members are moved to a location intermediate of said positions to provide fluid communication through said port and across said valve seat; and second spring means having a predetermined spring rate greater than that of said first spring means on said housing member and adapted to be engaged by said valve carrier as said valve carrier moves in said one direction to store energy in said second spring means, said second spring means releasing said stored energy after said telescoped members have reached said contracted position whenever a predetermined pressure differential exists across said seated valve member to overbias said first spring means and move said valve carrier in said opposite direction to pass said valve carrier over said one end of said body member to unseat said valve member.

15. In a well tool adapted for use in a well bore: a tubular housing member; a tubular body member having an annular valve seat on one end thereof and telescopically received in said housing member, said members being adapted for connection in a string of pipe and movable in relation to one another between expanded and contracted positions; a valve carrier slidably mounted in said housing member adjacent to said one end of said body member and adapted to receive said body member; a valve member pivotally mounted on one side of said valve carrier and adapted to seat on said valve seat, said valve body and valve member being movable by said body mem-

ber in said one direction as said telescoped members are moved toward said contracted position; first spring means having a predetermined spring rate normally biasing said valve member in an opposite direction onto said valve seat; bypass means including a port in said body member and means fluidly sealing said port when said telescoped members are in said expanded position for preventing fluid communication through said port until said telescoped members are moved to a location intermediate of said positions to provide fluid communication through said port and across said valve seat; a movable support member spaced apart from said valve carrier, said support member having a projection therefrom adapted to be engaged by said valve carrier; second spring means having a predetermined spring rate less than that of said first spring means between said movable support and said valve carrier; and third spring means having a predetermined spring rate greater than that of said first spring means between said housing member and said movable support, said second spring means becoming disabled as said valve carrier moves into engagement with said projection and stores energy in said third spring means, said third spring means releasing said stored energy after said telescoped members have reached said contracted position whenever a predetermined pressure differential exists across said seated valve member to overbias said first spring means and move said valve carrier in said opposite direction to pass said valve carrier over said one end of said body member to unseat said valve member.

References Cited

UNITED STATES PATENTS

2,921,601	1/1960	Fisher	166—224 X
2,931,439	4/1960	Alexander	166—225
3,078,923	2/1963	Tausch	166—224
3,151,839	10/1964	Mott	166—226 X
3,249,124	5/1966	Berryman	166—226 X

CHARLES E. O'CONNELL, *Primary Examiner.*

D. H. BROWN, *Assistant Examiner.*