April 13, 1937. F. J. CHAMPLIN 2,077,212

CONTACT MAKING VOLTMETER

Filed April 10, 1934

Fig. 1.

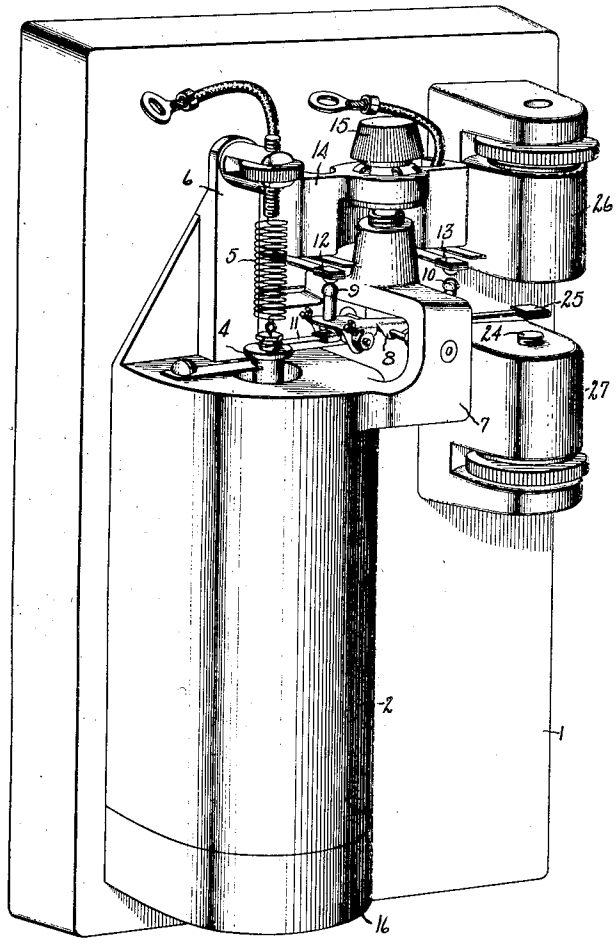

Fig. 2.

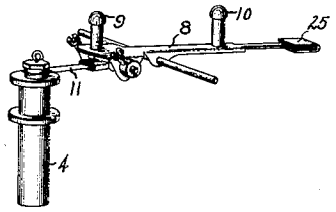

Fig. 3.

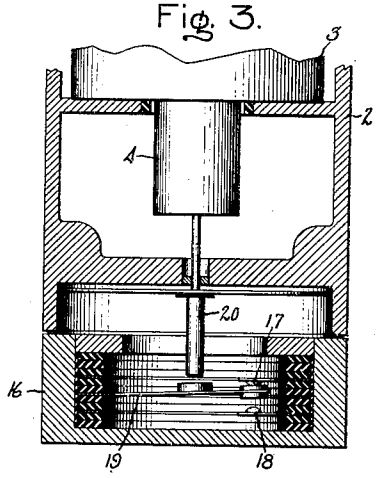

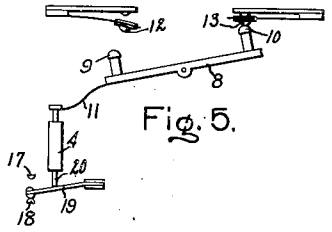

Fig. 5.

Fig. 4.

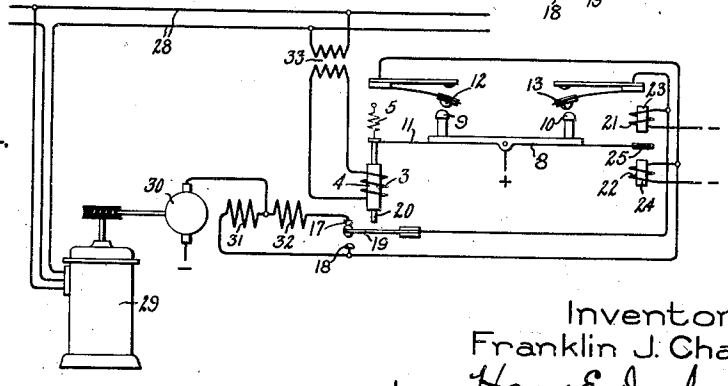

Inventor:
Franklin J. Champlin,
by Harry E. Dunham
His Attorney.

Patented Apr. 13, 1937 2,077,212

UNITED STATES PATENT OFFICE

2,077,212

CONTACT MAKING VOLTMETER

Franklin J. Champlin, Dalton, Mass., assignor to General Electric Company, a corporation of New York

Application April 10, 1934, Serial No. 719,899

7 Claims. (Cl. 200—104)

My invention relates to contact making voltmeters, and more particularly to improvements in combined contact making voltmeters and mechanically operated low voltage cutouts which are actuated by the meter.

Contact making voltmeters are usually used as the control element of automatic voltage regulating systems. When so used, the operation is such that when the voltage of the regulated circuit is below the normal value, a set of contacts on the meter close, thereby completing a circuit for causing the regulating system to increase the circuit voltage. Similarly, if the voltage of the regulating circuit is above a predetermined value, a second set of contacts on the meter close thereby completing a different circuit and causing the regulating system to reduce the voltage. It not infrequently happens that there is a substantial, or even complete, failure of voltage on the regulated circuit, due for example, to the opening of a circuit breaker therein, and under these conditions the natural tendency for the regulating system is to cause it to attempt to raise the voltage the maximum amount that the regulator is capable of. This, however, is often objectionable for the reason that when substantially normal voltage is again applied to the circuit this voltage will be added to the maximum boosting voltage of the regulator with the result that a sufficiently high momentary overvoltage is applied to the circuit to cause injury to various translating devices connected thereto, such for example, as incandescent lamps, which are very sensitive to overvoltage.

It has been proposed in the past to add to the contact making voltmeter a device, known as a low voltage cutout, and to operate this device mechanically from the meter. The low voltage cutout is merely a switch for reversing the connections between the contacts on the meter, which normally produce an increase in voltage by the regulator, and the regulator motor, so that during the operation of the cutout a closing of these contacts causes the regulator to decrease the voltage rather than to increase it. Such a combination is intended to produce a stable system which will entirely eliminate the danger of overvoltage because upon failure of voltage the regulator goes to its maximum voltage bucking condition so that when voltage is again restored the regulator will again come into play and will act in its normal manner to return and maintain the voltage at normal.

In the previously proposed arrangements described above, the low voltage cutout is intended to be operated by the weight of the core of the operating magnet of the contact making voltmeter during low voltage conditions. However, I have found that due to the extremely limited range of motion of this core, which is permitted by the contacts of the meter, that this operation is extremely unreliable and unsatisfactory. It has been proposed to mount the stationary contacts of the meter resiliently so that they will have some give and thus permit further movement of the core on low voltage after the low voltage closing contacts of the meter close, as a result of the flexing of the mounting of the stationary one of the two contacts. However, even this motion is insufficient to produce proper operation and I have found that even during normal voltage changes on the circuit, the low voltage cutout will sometimes operate. This is, of course, a serious disadvantage because as soon as the low voltage cutout operates, the regulator reduces the voltage still further so that the regulator goes out of service and cannot be restored except by a manual adjustment.

In addition to the above mentioned drawback of the previously proposed arrangements, there is a further disadvantage. This is brought about by the fact that in contact making voltmeters, as heretofore constructed, the stationary contacts are individually adjustable. Consequently, when making adjustments on the meter by moving these contacts so as to provide the proper voltage limit and voltage regulating band, one contact is sometimes raised or lowered more than the other so that the normal or mid-position of the contact beam of the meter is displaced from the proper position. This obviously alters the relation of the core of the operating magnet with respect to the low voltage cutout so that the danger of false or undesirable operation of the low voltage cutout is greatly accentuated.

In accordance with my invention, I provide an improved combined contact making voltmeter and low voltage cutout which overcomes the above noted disadvantages. This I accomplish by providing the contact making voltmeter with a resilient operating connection between the core of its operating magnet and the contact beam, and also providing the meter with unitary means for simultaneously and equally adjusting the stationary contacts. In this manner, the normal position of the contact beam is always the same, regardless of the adjusted position of the stationary contacts, and in addition, the resilient operating connection between the contact beam and the core permits a relatively greater movement

of the core than of the contact beam on low voltage conditions, as the resilient connection flexes, thereby permitting substantially the full weight of the core to be applied to the low voltage cutout.

An object of my invention is to provide a new and improved combined contact making voltmeter and low voltage cutout.

My invention will be better understood from the following description taken in connection with the accompanying drawing and its scope will be pointed out in the appended claims.

In the drawing, in which like reference characters designate similar parts throughout the several views, Fig. 1 is a perspective view of my combined contact making voltmeter and low voltage cutout, Fig. 2 is a detailed view of the resilient operating connection between the pivotally mounted contact beam and the upper part of the operating magnet core, Fig. 3 is a cross sectional view of the lower part of the operating magnet showing the relation between the core of the magnet and the low voltage cutout, Fig. 4 is an elementary wiring diagram of my invention and Fig. 5 is a detailed view showing the parts of the contact making voltmeter and low voltage cutout of Fig. 1 in the positions they assume upon voltage failure.

Referring now to the drawing, I have shown my invention as comprising a base member 1 on which is mounted a main supporting casting 2 which serves to enclose and support a main operating magnet winding 3, through which is passed a solenoid core 4. The weight of the solenoid core is partially supported by a compensating spring 5, which in turn is supported by a bracket 6 on the casting 2. The casting 2 is also provided with another bracket 7 for carrying the bearing for a suitably supported contact beam 8 carrying a pair of contacts 9 and 10 on opposite sides of a suitable support, respectively.

A resilient operating connection comprising a blade spring 11 serves to connect the core and the contact beam.

For cooperation with the movable contacts 9 and 10 there is provided a pair of stationary contacts 12 and 13 which are shown more clearly in Fig. 1, both mounted on a supporting member 14, which is adjustably mounted on the bracket 7 by means of a manually adjustable screw 15. By turning this screw the block 14 may be raised or lowered thereby simultaneously and equally adjusting the position of the stationary contacts 12 and 13 with respect to their associated movable contacts 9 and 10.

The above described constructional features, insofar as they apply to the meter per se, are disclosed more in detail and claimed in my copending application S. N. 719,898, filed April 10, 1934 and assigned to the assignee of the present application which became Patent No. 2,039,632 on May 5, 1936.

As shown more in detail in Fig. 3 there is attached to the bottom of casting 2 a mechanically operated low voltage cutout 16 which consists essentially of a pair of stationary contacts 17 and 18, between which is mounted a movable contact 19, which is biased by any suitable means, such as by a spring support, into engagement with the upper contact 17. As shown, the core 4 is provided with an extension or stem 20 which throughout the normal range of movement of the core 4 is out of engagement with the movable contact 19, but which during abnormally low voltage conditions, when the core 4 moves downwardly, engages the contact 19 and causes it to disengage contact 17 and make contact with the contact 18.

The contact making voltmeter is also provided with the usual holding coils 21 and 22, having cores 23 and 24, respectively, which are arranged to act upon a movable armature 25 attached to the contact beam 8. As shown more clearly in Fig. 1, these magnets are enclosed by suitable casings 26 and 27, respectively.

The electrical connections of an application of my invention to an automatic voltage regulating system are shown in Fig. 4. In this figure an alternating current circuit 28 is connected to have its voltage regulated by means of an induction voltage regulator 29 which is mechanically connected to be operated by a suitable reversible operating motor 30. This motor is controlled by the contact making voltmeter through the following connections. The contact beam is connected to one side of a suitable source of control potential indicated by the plus and minus signs and the stationary contacts 12 and 13 are connected respectively to the terminals of a pair of reversing field windings 31 and 32 on the motor 30. The other terminal of the motor is connected to the other side of the source of control potential. Connected in parallel with the windings 31 and 32 are the holding coils 22 and 21, respectively. The stationary contact 13 is connected to the winding 32 through the low voltage cutout comprising the contacts 19 and 17. In addition the contact 18 of the low voltage cutout is connected to the connection between the winding 31 and the stationary contact 12. Also the operating winding 3 of the meter is connected so as to respond to the voltage of circuit 28 by any suitable means, such as by means of a potential transformer 33.

The operation of the illustrated embodiment of my invention is as follows: With the parts in the position shown in Fig. 4, the voltage on the circuit 28 is substantially normal and contacts 9 and 10 are out of engagement with their respective stationary contacts 12 and 13, so that the motor 30 is deenergized and the regulator 29 is stationary. If now the voltage should exceed the normal value, the core 3 would rise causing the contact 9 to engage the contact 12 whereby a circuit is completed to the motor through the winding 31 thereof. This causes the motor to turn the regulator 29 in such a direction as to lower the voltage of circuit 28. This action continues until the voltage returns to substantially normal, whereby the contact 9 will leave the contact 12. In a like manner if the voltage of circuit 28 is below normal the core 3 will descend, thereby causing contact 10 to engage contact 13 whereby a circuit for the motor is completed through the contacts 17 and 19 of the low voltage cutout to the winding 32 thereof, thereby reversing the direction of the motor 30 and causing the regulator to increase the voltage of the circuit 28. This action will continue until normal voltage is again established.

It will be seen that the holding coils 21 or 22 are energized whenever the contacts 10 or 9 engage their respective stationary contacts. These windings serve to hold the contacts firmly in engagement and prevent chattering and sparking thereof. This, however is an old and well known feaure of contact making voltmeters.

If now the voltage of circuit 28 should fall to a very low value the parts will assume the position shown in Fig. 5. Thus the core 4 will descend thereby flexing the resilient support of the stationary contact 13 until it engages the stop

above it whereby the movement of the pivotal contact beam 8 is arrested, but due to the resilient operating connection 11, the core is permitted to move still further downwardly so that eventually it causes the contact 19 to disengage the contact 17 and engage the contact 18. When this occurs, a circuit is completed through the contacts 10 and 13 and through the contacts 19 and 18 to the motor through the winding 31, which causes this motor to operate in a direction to cause the regulator to lower still further the voltage of circuit 28. If now, voltage on the circuit 28 is again restored, the core 4 moves upwardly due to the increased energization of the winding 3, whereupon the low voltage cutout will be restored to the position shown in Fig. 4, whereby the direction of rotation of the motor 30 is reversed and the regulator tends to increase the voltage and this action continues until the voltage returns to normal.

Although the resilient mounting of the stationary contact 13 allows some movement of the contact beam 8 after the contact 10 engages the contact 13, I have found that it is impractical to produce a resilient mounting which will permit sufficient movement of the contact beam 8 after these contacts engage to allow the core 4 to descend far enough to secure positive and reliable action of the low voltage cutout. Consequently, the resilient operating connection 11 I have found to be indispensable to the proper operation of the combined contact making voltmeter and low voltage cutout.

The calibration of the meter is controlled by adjusting the tension of the compensating spring 5, that is to say, the normal voltage which is held by the regulating system is determined by the tension of this spring, which may be adjusted in any well known manner such as by the screw and nut supporting means shown. The voltage limits or voltage regulating band held by the system is controlled by adjusting the screw 15 which raises and lowers the stationary contacts 12 and 13 together as a unit. With this arrangement, the normal position corresponding to normal voltage, regardless of what the value of this voltage is, is always the same for the beam 8, and for example, this beam may be in a horizontal position for normal voltage at all times, regardless of the adjustment of the meter. Consequently, there is always the same relative displacement between the stem 20 and the movable contact 19 of the low voltage cutout regardless of what voltage is being held by the meter. Hence, the low voltage cutout will operate in the same manner regardless of the calibration of the meter, or the adjustment of the stationary contacts 12 and 13.

While I have shown and described a particular embodiment of my invention, it will be obvious to those skilled in the art that changes and modifications may be made without departing from my invention, and I, therefore, aim in the appended claims to cover all such changes and modifications as fall within the true spirit and scope of my invention.

What I claim as new and desire to secure by Letters Patent of the United States, is:

1. A contact making voltmeter comprising, in combination, an operating magnet, a solenoid core therefor, a contact beam having separate contact making positions which it assumes when the energization of said magnet is respectively a predetermined amount above or below a predetermined normal value, a low voltage cutout mounted so as to be operated by said core, a resilient mechanical operating connection between said core and said contact beam which flexes sufficiently under the weight of said core to allow positive operation of said cutout, said cut-out when operated being connected to reverse the contact-making effect of said contact-making voltmeter.

2. A contact making voltmeter comprising, in combination, an operating magnet, a solenoid core therefor, a pivotally mounted contact beam having separate contact making positions which it assumes when the energization of said magnet is respectively a predetermined amount above or below a predetermined normal value, a low voltage cutout mounted so as to be operable by said core, a blade spring connecting said core and contact beam which flexes sufficiently under the weight of said core to allow positive operation of said cutout, said cut-out when operating being connected to reverse the contact-making effect of said contact-making voltmeter.

3. A contact making voltmeter comprising, in combination, an operating magnet, a solenoid core therein, a contact beam connected to be actuated by said core, said contact beam having a normal position, a low voltage cutout mounted so as to be actuated by said core, a set of stationary contacts for cooperation with said contact beam, and means for simultaneously and equally adjusting the position of said stationary contacts whereby the normal position of said beam is independent of the adjustment of said stationary contacts.

4. A contact making voltmeter comprising, in combination, an operating magnet, a solenoid core therein, a pivotally mounted contact beam, a resilient operating connection between said core and said beam, said beam having separate contacts on each side of its pivotal mounting, said beam having a normal position, a low voltage cutout connected so as to be actuated by said core, and a set of individually resiliently mounted stationary contacts for cooperation respectively with the contacts on said beam.

5. A contact making voltmeter comprising, in combination, an operating magnet, a solenoid core therein, a pivotally mounted contact beam, stationary contacts for cooperation with said beam, a low voltage cutout arranged to be actuated by said core, a resilient operating connection between said core and said beam, and means for simultaneously and equally adjusting the position of said stationary contacts.

6. A contact making voltmeter comprising, in combination, an operating magnet, a solenoid core therein, a pivotally mounted contact beam connected to be actuated by said core, said beam having separate contacts on each side of its pivotal mounting, said beam having a normal position, a low voltage cutout connected so as to be actuated by said core, a set of individually resiliently mounted stationary contacts for cooperation respectively with the contacts on said beam, and means for adjusting the position of said stationary contacts as a unit.

7. In a contact making voltmeter of the type having a core operated low voltage cutout and a pivotal contact beam for cooperation with stationary contacts, the combination of a resilient operating connection between the core and beam together with means for simultaneously and equally adjusting the stationary contacts.

FRANKLIN J. CHAMPLIN.