June 15, 1926. 1,588,708

E. J. CUTSINGER ET AL

AUTOMATIC WINDOW CLOSER

Filed Oct. 26, 1925

Fig. 1.

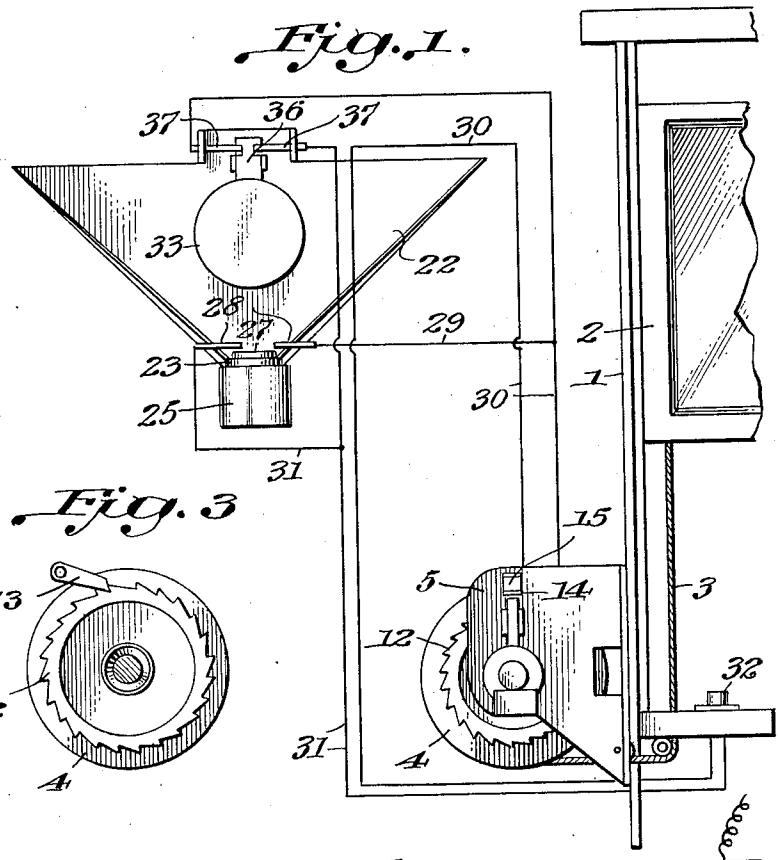

Fig. 3

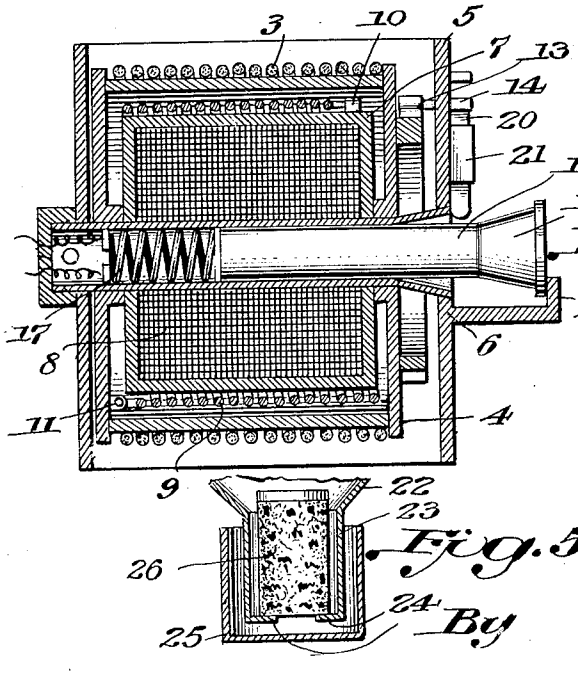

Fig. 5.

Fig. 4.

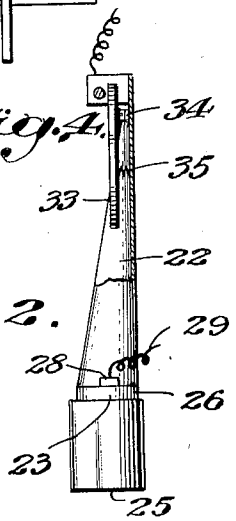

Fig. 2.

Inventors

Earl James Cutsinger

Thurl Monroe Hagenbook

By

Atty.

Patented June 15, 1926. 1,588,708

UNITED STATES PATENT OFFICE.

EARL JAMES CUTSINGER AND THURBE MONROE HAGENBOOK, OF EVANSVILLE, INDIANA.

AUTOMATIC WINDOW CLOSER.

Application filed October 26, 1925. Serial No. 64,977.

This invention relates to an electrically controlled device for automatically closing windows when a strong wind prevails or rain begins to fall, and its purpose is to provide means which will prevent damage by wind or rain to the contents of a room or to the sill or wall-paper, when a storm arises and the window has been left open.

The principle of the invention involves the use of a spring operated drum which is put under tension when the window is raised, but is held against unwinding by pawl and ratchet mechanism electromagnetically released through circuits which are controlled by wind operated and water operated contact means.

We are aware that modifications may be resorted to in carrying out the principle of the invention and we do not, therefore, limit ourselves to the specific embodiments hereinafter described and which are shown in the accompanying drawings, said embodiments being illustrative, instead of restrictive of the scope of the invention.

In the accompanying drawings:

Figure 1 is a view, partly in elevation and partly diagrammatic, showing the invention in use;

Figure 2 is a detail view of the window operating mechanism;

Figure 3 is a detail view of the pawl and ratchet mechanism for the drum;

Figure 4 is a similar view, partly broken away, of the electric contact means; and

Figure 5 is a detail section showing the float.

Our invention is illustrated in connection with an ordinary window frame and a sliding weight-raised window 2, but it will be understood that the improvements may be used in connection with any kind of a window.

A cable or rope 3, connected to the window 2, serves the purpose of winding up, or placing under tension, the drum 4 which is used for pulling down the window to close it when said drum is released through the operation of instrumentalities which will be described.

The operating means for closing the window 2 is carried by a casing or bracket 5, which is preferably concealed within the window casing or frame. This bracket or housing 5 is provided with a hollow axle or mounting 6, on which the drum 4 is arranged to turn.

Carried by the axle 6 is the shell 7 of an electromagnet whose windings appear at 8. The spring which operates the drum 4 is shown at 9, said spring being connected to the shell 7 at one end as shown at 10, and to the drum at its other end, as indicated at 11, the coils or convolutions of the spring surrounding the shell 7.

The cable 3 is wound around the drum 4. When the window 2 is raised, the window pulling on the cable 3, turns the drum 4 and places the spring 9 under additional tension so that when the drum is released, the spring 9 will cause it to turn in the opposite direction, wind up the cable 3 and pull down the window.

If desired, any suitable cushioning device may be used so that the window will not be lowered too forcibly.

The drum is provided with a ratchet wheel 12 which is engaged by a pawl 13, having an extension 14, which extends through a slot 15 in one side of the bracket or housing 5. Normally the pawl locks the drum 4 against being turned by the spring 9.

An armature 16, which is slidable in the hollow axle 6, is normally pressed outwardly by a coil spring 17 until it is arrested by a stop 18. The armature has a coned end or head 19. The pawl operator 20, which is slidable in a guide 21, has its lower end positioned to be engaged by the head 19 when the armature is drawn inwardly by the energization of the electromagnet. When this occurs, the pawl operator 20 is pushed into engagement with the extension 14 of the pawl 13, thereby releasing the pawl from the ratchet wheel 12, whereupon the spring 9 immediately turns the drum 4 which then winds up the cable 3 and closes the window.

When the window is raised, the drum is rotated in the reverse direction by this act, the pawl 13 then riding idly on the ratchet wheel, and, finally, engaging a tooth of the ratchet wheel to prevent the drum from unwinding.

The operation of the electromagnet or solenoid 8 is under the control of wind and

rainfall operated switches so that if the wind rises to any extent the circuit to the solenoid 8 will be closed, or, should it rain, there will be a like result. Preferably we combine the two controls in one device, but this need not be so.

There is a vertically arranged shell 22 which is open to catch rainfall and is preferably of considerable width to cause a quick accumulation of the water. This shell terminates at its lower end in the cylindrical bottom 23, which has inturned lips 24 at its lower end and which is enclosed by a removable cup, or thimble, 25. The purpose of the cup or thimble 25 is to catch the rain passing downwardly from the shell 22 and it is made removable so that it can be taken off and emptied. Located within the cylindrical part 23 is a float 26 which may be a cork, said cork having a metal plate 27 on its upper end. Contacts 28 are located so that they will be engaged by the metal plate 27 when the float 26 rises due to accumulation of water in the thimble 25. The contacts 28 are in the circuit 29 leading to circuit 30 that includes the coil 8 and they are also included in the circuit 31 from which they receive current from any suitable source and which is controlled by a switch 32 so that said circuit may be established or broken according to whether it is desired to have the device ready for use or otherwise.

A vane 33 is located in the upper part of the shell 22 and pivoted at 34 to said shell. A spring 35 restricts movement of the vane by gentle winds but does not interfere with said vane moving backwardly when the wind rises. When the vane is moved backwardly by the wind rising, its metal part 36 engages contacts 37 which are included in the circuits 30 and 31.

Assuming that the window 2 has been raised, as shown in the drawings, the pawl 13 by its engagement with the ratchet wheel 12, keeps the drum 4 from being turned by the spring 9.

If the prevailing wind is mild, the pressure is not sufficient to swing the vane 33 to cause the contact 36 to engage the contacts 37, but if, the wind rises sufficiently the vane 33 is pressed backwardly and the contact 36 then bridges the contacts 37 which closes the circuit 30, 31, assuming that the switch 32 has been previously closed, and the coil 8 becomes energized. This results in the core being pulled inwardly and its head 19 engages the pawl operator 20, thus releasing the pawl 13 from the ratchet wheel 12, whereupon the spring 9 immediately turns the drum 4, winds up the cable 3 and pulls down the window 2.

The same results occur when rain in sufficient quantity, having struck the shell 22, passes down into the thimble 25, and by its accumulation, causes the float 26 to rise and to bring its metal disk or contact 27 against the contacts 28, thereby closing the circuit 29, 21.

What we claim is:

1. In an automatic window closer, the combination with electromagnetically controlled power means for positively closing a window, of a normally open wind-operated switch, circuit connections therefrom to the aforesaid means, a normally open rainfall-operated switch, and circuit connections from said rainfall-operated switch to the aforesaid electromagnetically controlled window-closing power means, whereby said power means is set in operation to positively close the window when either of said switches is operated.

2. In an automatic window closer, the combination with a spring-operated drum, and an operative flexible connection from said drum to a window, of means for locking the drum against unwinding when the window is raised, a normally open wind-operated switch, electromagnetic means for releasing said drum so that its spring may act, and circuit connections from said wind-operated switch to said electromagnetic means.

3. In an automatic window closer, the combination with a spring-operated drum, and an operative flexible connection from said drum to a window, of means for locking the drum against unwinding when the window is raised, a normally open rainfall-operated switch, electromagnetic means for releasing said drum so that its spring may act, and circuit connections from said switch to said electromagnetic operated means.

4. In an automatic window closer, the combination with electromagnetically controlling means for closing a window, of a combined wind and rainfall operated switch for controlling said electromagnetically operating means, comprising a shell, a movably mounted wind operated vane, contacts which are adapted to be opened or closed by said vane, a rain collector carried by the shell, a float adapted to be raised by the accumulation of water, and contacts which are opened or closed by the operation of said float.

5. Means for closing a window, comprising a rotarily mounted, spring operated, drum, a cable winding on said drum which is connected to said window, said drum being arranged so that the spring is tensioned when the window is moved from its closed position and releasable latching means for holding the drum to prevent it from being turned by its spring means for locking the drum, an electromagnet for releasing said locking means, and an electric switch controlling the operation of said electromagnet, said switch being operable by the "elements" of nature.

6. Means for closing a window, comprising a rotarily mounted drum, a spring for turning said drum, a cable connecting the drum to a window, said spring being tensioned when the window is moved from its closed position, pawl and ratchet means for holding the drum when the window is opened, a solenoid contained within the drum, an armature adapted to be drawn into the solenoid, a pawl operator which is actuated by said armature when the solenoid is energized, and a switch controlled circuit of the solenoid.

In testimony whereof we affix our signatures.

EARL JAMES CUTSINGER.
THURBE MONROE HAGENBOOK.