PCT WORLD INTELLECTUAL PROPERTY ORGANIZATION
International Bureau

INTERNATIONAL APPLICATION PUBLISHED UNDER THE PATENT COOPERATION TREATY (PCT)

(51) International Patent Classification 5 :
H02K 23/00, H02P 1/18, 3/08, 5/06, 7/06 | **A1**

(11) International Publication Number: **WO 94/29943**

(43) International Publication Date: 22 December 1994 (22.12.94)

(21) International Application Number: PCT/US94/06252

(22) International Filing Date: 6 June 1994 (06.06.94)

(30) Priority Data:

08/076,556	11 June 1993 (11.06.93)	US
08/094,570	20 July 1993 (20.07.93)	US

(81) Designated States: AU, CA, JP, European patent (AT, BE, CH, DE, DK, ES, FR, GB, GR, IE, IT, LU, MC, NL, PT, SE).

Published
With international search report.

(71) Applicant: HARMONIC DESIGN, INC. [US/US]; 9601 Owensmouth #1, Chatsworth, CA 91311 (US).

(72) Inventors: DOMEL, Douglas, R.; 21201 Vintage Street, Chatsworth, CA 91311 (US). WALKER, Winston, G.; 7 Acacia Tree Lane, Irvine, CA 92715 (US).

(74) Agent: ROGITZ, John, L.; Rogitz & Associates, Suite 1600, 501 W. Broadway, San Diego, CA 92101 (US).

(54) Title: HEAD RAIL-MOUNTED MINI-BLIND ACTUATOR

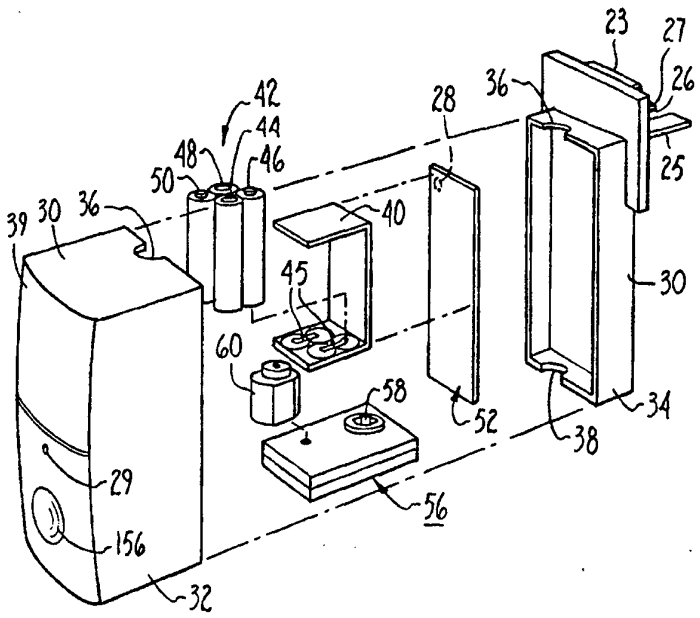

(57) Abstract

A mini blind actuator has a motor and a housing (30) that holds the motor (60) and a dc battery (40). The rotor of the motor is coupled to the baton (22) of the mini-blind for rotating the baton and thereby opening or closing the slats of the mini-blind. Alternatively, the rotor is coupled to the tilt rod of the blind to rotate the tilt rod and thereby open or close the slats of the mini-blind. A control signal generator (52) generates a control signal for completing the electrical circuit between the battery and the motor. The control signal can be generated in response to a predetermined amount of daylight or in response to a user generated remote command signal.

FOR THE PURPOSES OF INFORMATION ONLY

Codes used to identify States party to the PCT on the front pages of pamphlets publishing international applications under the PCT.

AT	Austria	**GB**	United Kingdom	**MR**	Mauritania
AU	Australia	**GE**	Georgia	**MW**	Malawi
BB	Barbados	**GN**	Guinea	**NE**	Niger
BE	Belgium	**GR**	Greece	**NL**	Netherlands
BF	Burkina Faso	**HU**	Hungary	**NO**	Norway
BG	Bulgaria	**IE**	Ireland	**NZ**	New Zealand
BJ	Benin	**IT**	Italy	**PL**	Poland
BR	Brazil	**JP**	Japan	**PT**	Portugal
BY	Belarus	**KE**	Kenya	**RO**	Romania
CA	Canada	**KG**	Kyrgystan	**RU**	Russian Federation
CF	Central African Republic	**KP**	Democratic People's Republic of Korea	**SD**	Sudan
CG	Congo			**SE**	Sweden
CH	Switzerland	**KR**	Republic of Korea	**SI**	Slovenia
CI	Côte d'Ivoire	**KZ**	Kazakhstan	**SK**	Slovakia
CM	Cameroon	**LI**	Liechtenstein	**SN**	Senegal
CN	China	**LK**	Sri Lanka	**TD**	Chad
CS	Czechoslovakia	**LU**	Luxembourg	**TG**	Togo
CZ	Czech Republic	**LV**	Latvia	**TJ**	Tajikistan
DE	Germany	**MC**	Monaco	**TT**	Trinidad and Tobago
DK	Denmark	**MD**	Republic of Moldova	**UA**	Ukraine
ES	Spain	**MG**	Madagascar	**US**	United States of America
FI	Finland	**ML**	Mali	**UZ**	Uzbekistan
FR	France	**MN**	Mongolia	**VN**	Viet Nam
GA	Gabon				

HEAD RAIL-MOUNTED MINI-BLIND ACTUATOR

FIELD OF THE INVENTION

The present invention relates generally to window covering peripherals and more particularly to remotely-controlled mini-blind actuators.

BACKGROUND

Louvered blinds, such as Levellor[R] mini-blinds, are used as window coverings in a vast number of business buildings and dwellings. The typical blind has a number of horizontal elongated parallelepiped-shaped louvers, i.e., rotationally-movable slats, which are collectively oriented with their major surfaces parallel to the ground ("open") to permit light to pass between adjacent slats, or with their major surfaces perpendicular to the ground ("closed"), to block light from passing between adjacent slats, or any intermediate position between open and closed. Stated differently, the slats can be rotated about their respective longitudinal axes, i.e., about respective lines which are parallel to the ground, to open or close the blind. Alternatively, the slats may be oriented vertically for rotation about their respective longitudinal axes (i.e., for rotation about respective lines that are perpendicular to the ground), for opening and closing the blind.

Ordinarily, to provide for movement of the slats of a blind between the open and closed positions, an elongated actuating baton is coupled to structure on the blind such that when the baton is manually rotated about its longitudinal axis, the slats move in unison between the open and closed positions. It will accordingly be appreciated that by proper manual operation of the baton, blinds can be used to effectively regulate the amount of light which passes into the room in which the blind is located. Thus, blinds can be opened during the day to permit sunlight to enter the room, or closed during particularly warm days to prevent overheating of the room. Likewise, blinds can be closed at night for security purposes, and to prevent heat within the room from dissipating through the window into the cool evening air.

While most existing manually-operated blinds accordingly provide an effective means for regulating the amount of light propagating into or out of a room, it is often advantageous to provide for remote or automatic positioning of the blinds. For example, it would be advantageous to provide for the automatic nighttime closing of blinds in a business premises, for both security reasons and energy conservation, rather than to rely on personnel to remember to manually close all blinds before vacating the premises for the evening. Also, remote operation of blinds would enable many invalid persons to regulate the amount of light entering their rooms, without requiring the persons to manually operate the actuating baton.

Not surprisingly, several systems have been introduced for either lowering and raising the slats of a blind, or for moving the slats between the open and closed positions. For example, U.S. Patent No. 4,644,990 to Webb, Sr. et al. teaches a system for automatically moving a set of venetian-type window blinds in response to sensing a predetermined level of sunlight. Likewise, U.S. Patent No. 3,860,055 to Wild teaches a system for automatically raising or lowering a shutter upon sensing a predetermined level of sunlight. Also, U.S. Patent No. 4,096,903 to Ringle, III discloses a system for opening a blind, wherein the Ringle, III system is mounted in the head rail of the blind and operates the blind in response to an electromagnetic control signal.

Unfortunately, the systems mentioned above, like many, if not most, automatic blind control systems, are somewhat complicated in operation and cumbersome and bulky in installation, and consequently are relatively expensive. For example, the Webb, Sr. et al. system requires that a housing be mated with the blind structure for holding the various components of the patented system, which includes, inter alia, ratchets, pawls, gears, clutches, levers, and springs. In a similar vein, the Wild invention requires the use of, among other components, a rather bulky gas-driven piston-and-cylinder to raise and lower the shutter. Precisely how the piston-and-cylinder is mounted on an existing shutter assembly is not discussed by Wild. The Ringle, III device consumes a relatively large amount of power to sense its control signal, and thus exhausts its battery quickly, in part because of its relatively complicated limit switch mechanism and because Ringle, III does not provide any electronic signal processing which would enable the Ringle, III device to sense a control signal efficiently, with little power consumption.

Accordingly, it is an object of the present invention to provide a comparatively simple device for opening and closing mini-blinds. It is another object of the present invention to provide a remote control device for opening and closing blinds which is compact and easy to install. Yet another object of the present invention is to provide a device for remotely and automatically opening and closing blinds. Still another object of the present invention is to provide a device for remotely and automatically opening and closing mini-blinds which consumes relatively little power. Further, it is an object of the present invention to provide a device for remotely and automatically opening and closing mini-blinds which is easy to use and cost-effective to manufacture.

SUMMARY OF THE INVENTION

An actuator is disclosed for rotating the actuating baton of a mini-blind to open or close the slats of the mini-blind. Typically, the mini-blind is mounted adjacent a surface, e.g., a window sill.

The actuator of the present invention includes an electric motor which is operably engaged with a coupling, and the coupling is engageable with the baton substantially anywhere along the length of the baton. A housing is provided for holding the motor, and a fastening element is attached to the housing and is connectable to a nearby surface, e.g., the window frame or the head rail of the blind, to prevent relative motion between the surface and the housing. At least one direct current (dc) battery is mounted in the housing and is electrically connected to the motor for selectively energizing the motor to rotate the baton.

Preferably, the rotor is connected to a gear assembly, and the gear assembly in turn is connected to the coupling. The coupling has a channel configured for closely receiving the baton. In the presently preferred embodiment, the gear assembly includes a plurality of reduction gears for causing the baton to rotate at a fraction of the angular velocity of the rotor, and a rack gear for operating a limit switch to deactivate the motor when the blind is in a predetermined configuration.

In one presently preferred embodiment, a power switch is mounted in the housing and is electrically connected between the battery and the motor. Preferably, the power switch is an electronic circuit for sensing a control signal with comparatively little expenditure of the battery energy. As intended by the present invention, the power switch has an open configuration, wherein the electrical circuit from the battery to the motor is incomplete, and a closed configuration, wherein the electrical circuit from the battery to the motor is complete.

To provide for remote operation of the actuator, the power switch is moved between the open and closed configurations by a control signal. In one embodiment, this control signal is generated by a daylight sensor which is electrically connected to the switch. The daylight sensor generates the control signal in response to a predetermined amount of light impinging on the daylight sensor.

Additionally, the control signal may be generated by a signal sensor which is electrically connected to the power switch. The signal sensor generates the control signal in response to a user command signal. To this end, a hand-held user command signal generator is provided which emits an optical user command signal.

In another aspect of the present invention, a device is disclosed for moving the operator of a window covering having slats to open or close the slats. The device includes an actuator that has an electric motor and a coupling operably engaged with the motor. The coupling contacts the operator to prevent rotational relative motion between the coupling and the operator. A portable source of electrical power is included, and a control signal generator is provided for generating a control signal to cause the source of electrical power to be electrically connected with the actuator for energizing the motor to move the operator.

In yet another aspect of the present invention, a method is disclosed for moving the slats of a mini-blind by rotating the actuating baton of the mini-blind. The method of the present invention includes the steps of providing a motor, a dc battery, and a housing for holding the battery and the motor, and then coupling the rotor of a motor with the baton. Next, the housing is fastened to a nearby surface, e.g., a window sill or the head rail of the

blind. Then, a predetermined electromagnetic signal is sensed to cause the battery to energize the motor and thereby rotate the baton.

In still another aspect of the present invention, a device is disclosed for rotating the operating baton of a blind to open and close the blind. As contemplated by the present invention, the device includes an electric motor having a rotor and a direct current battery. A coupling is operably engaged with the motor and is also coupled to the baton for transferring rotational motion of the rotor to the baton. A light sensor generates a signal to complete an electrical circuit between the battery and the motor when light having a predetermined intensity impinges on the sensor. In accordance with the present invention, the light sensor has a dark current equal to or less than about 10^{-5} amperes.

In an alternate embodiment, an actuator is provided for rotating the tilt rod of a blind having a head rail. The actuator includes a coupling which is engageable with the tilt rod such that movement of the coupling causes rotation of the tilt rod. A reversible electric direct current (dc) motor is operably engaged with the coupling to move the coupling, and a dc battery is electrically connected to the motor to energize the motor. In this alternate embodiment, a sensor detects a light signal and generates a control signal in response to the light signal. The control signal is sent to an electronic circuit which is electrically connected to the sensor and the battery for processing the control signal from the sensor to cause the battery to energize the motor. The sensor and circuit are designed to sense the control signal and process the signal in an energy efficient manner to activate the motor, thereby conserving battery energy and maximizing battery useful life.

Preferably, the sensor is a daylight sensor and the control signal is generated by the daylight sensor in response to a predetermined amount of light impinging on the daylight sensor. Additionally, a signal sensor can generate the control signal in response to a user command signal. To this end, a hand-held user command signal generator can be provided for selectively generating the user command signal.

As intended by the preferred embodiment, the electronic circuit has an edge detector for delaying energization of the motor for a predetermined time period after generation of

the control signal by the daylight sensor. In other words, the edge detector prevents operation of the blind in the event that a spurious light signal, e.g., from an automobile headlight, momentarily impinges upon the daylight sensor at night.

Additionally, a manually manipulable adjuster is engaged with the tilt rod. The tilt rod has a closed position, wherein the blind is fully closed, and an open position, wherein the blind is open, and the open position is selectively established by manipulating the adjuster.

In another aspect of the alternate embodiment, a device is disclosed for opening and closing the slats of a window covering of the type having a head rail and an operator disposed within the head rail. The device of the present invention includes an actuator which has an electric motor and a coupling operably engaged with the motor, and the coupling contacts the operator to prevent rotational relative motion between the coupling and the operator. A source of electrical power and a control signal generator for generating a control signal are also provided, and an electronic circuit is electrically connected to the control signal generator and the source of electrical power for processing the control signal to cause the source of electrical power to energize the motor to move the operator. Preferably, the electronic circuit includes at least one electronic component that is responsive to the control signal for energizing the actuator.

In yet another aspect of the alternate embodiment, a method is disclosed for moving the slats of a blind by rotating the tilt rod of the blind. In accordance with the method of the present invention, a motor, a dc battery, and an electronic circuit are provided for receiving a control signal and processing the control signal to cause the battery to energize the motor. With this purpose in mind, the rotor of the motor is coupled with the tilt rod, and a predetermined electromagnetic signal is sensed to generate the control signal and cause the electrical circuit between the battery and the motor to be completed to rotate the tilt rod.

In still another aspect of the present invention, an actuator is disclosed which is couplable to an operating component of a blind having an open configuration and a closed configuration. The actuator includes a sensor for detecting a light signal and generating a

control signal in response thereto. Also, the actuator includes a coupling that is engageable with the operating component of the blind such that movement of the coupling causes the blind to move toward the open configuration or toward the closed configuration. A reversible electric direct current (dc) motor is operably engaged with the coupling to move the coupling, and a dc battery is provided for energizing the motor.

Furthermore, an electronic circuit is electrically connected to the light sensor and to the battery. As intended by the present invention, the electronic circuit processes the control signal from the light sensor to cause the battery to energize the motor. The electronic circuit advantageously includes an edge detector for delaying energization of the motor for a predetermined time period after generation of the control signal by the sensor.

The details of the present invention, both as to its construction and operation, can best be understood in reference to the accompanying drawings, in which like numerals refer to like parts, and which:

BRIEF DESCRIPTION OF THE DRAWINGS

Figure 1 is a perspective view of the actuator of the present invention, shown in one intended environment;

Figure 2 is another perspective view of the actuator of the present invention, shown in one intended environment;

Figure 3 is an exploded view of the actuator of the present invention;

Figure 4 is a perspective view of the gear assembly of the actuator of the present invention, with portions broken away;

Figure 5A is a perspective view of the main reduction gear of the actuator of the present invention;

Figure 5B is a cross-sectional view of the main reduction gear of the actuator of the present invention, as seen along the line 5B-5B in Figure 5A;

Figure 6 is a perspective view of the reed switch of the actuator of the present invention;

Figure 7 is a schematic diagram of the electronic circuitry of the actuator of the present invention;

Figure 8 is a perspective view of an alternate embodiment of the blind actuator present invention, with portions of the head rail of the blind cut away for clarity; and

Figure 9 is a schematic diagram of the electronic circuitry of the actuator shown in Figure 8.

DETAILED DESCRIPTION OF THE PREFERRED EMBODIMENT

Referring initially to Figure 1, an actuator is shown, generally designated 10. As shown, the actuator 10 is in operable engagement with a rotatable operating baton 12 of a mini-blind 14 having a plurality of louvered slats 16.

In the embodiment shown, the mini-blind 14 is a Levellor^{R}-type mini-blind which is mounted on a window frame 18 to cover a window 20, and the baton 12 is rotatable about its longitudinal axis. When the baton 12 is rotated about its longitudinal axis, each of the slats 16 is caused to rotate about its respective longitudinal axis to move the mini-blind 14 between an open configuration, wherein a light passageway is established between each pair of adjacent slats, and a closed configuration, wherein no light passageways are established between adjacent slats.

While the embodiment described above discusses a mini-blind, it is to be understood that the principles of the present invention apply to a wide range of window coverings that have louvered slats.

As can be appreciated in reference to Figure 1, the baton 12 has a hexagonally-shaped transverse cross-section, and the baton 12 is slidably engageable with a channel 22 of the actuator 10. Accordingly, the actuator 10 can be slidably engaged with the baton 12 substantially anywhere along the length of the baton 12.

Figure 2 shows that the actuator 10 includes a fastening element, preferably a clip 23, for fastening the actuator 10 to a head rail 24 of the mini-blind 14. In the embodiment shown, the clip 23 engages the head rail 24 in a close interference fit to hold the actuator 10 onto the head rail 24. A support 25 is connected to or molded integrally with the actuator 10, and the support 25 extends below the head rail 24 and above the top slat 16a of the blind 14 to laterally support the actuator 10.

Alternatively, the actuator 10 can be fastened to the window frame 18. In such an embodiment, a strip of tape (not shown) having adhesive material on both of its opposed major surfaces is adhered to a portion of the actuator 10, and when the actuator 10 is gently pressed against the window frame 18, the tape adheres to the window frame 18 to fasten the actuator 10 to the window frame 18. It is to be understood that the actuator 10 alternatively may be attached to the frame 18 by bolts, screws, glue, nails, or other well-known fasteners.

In cross-reference to Figures 2 and 3, the actuator 10 has a rigid solid plastic light pipe 26 which, when the actuator 10 is mounted on the window frame 18 as shown, extends between the window 20 and the mini-blind 14. Accordingly, a light passageway is established by the light pipe 26 from the window 20 to the actuator 10. To facilitate the transmission of light through the light pipe 26, the light pipe 26 has an end 27 which has a relatively rough, e.g., thirty micron (30μ) finish, while the remainder of the surface of the light pipe 26 has a three micron (3μ) finish. It will be appreciated in reference to Figures 1 and 2 that the light pipe 26 also provides lateral support to the actuator 10, in the same manner as provided by the support 25.

A control signal generator, preferably a daylight sensor 28 (shown in phantom in Figure 3) is mounted on the actuator 10 by means well-known in the art, e.g., solvent bonding. In accordance with the present invention, the daylight sensor 28 is in light

communication with the light guide 26. Also, the sensor 28 is electrically connected to electronic components within the actuator 10 to send a control signal to the components, as more fully disclosed below. Consequently, with the arrangement shown, the daylight sensor 28 can detect light that propagates through the window 20, independent of whether the mini-blind 14 is in the open configuration or the closed configuration.

Further, the actuator 10 includes another control signal generator, preferably a signal sensor 29, for receiving an optical, preferably visible red modulated user command signal. Preferably, the user command signal is generated by a hand-held user command signal generator 31, which advantageously is a television remote-control unit. In one presently preferred embodiment, the generator 31 generates a pulsed optical signal having a pulse rate of between about fifteen hundred microseconds and five thousand microseconds (1500μs-5000μs).

Like the daylight sensor 28, the signal sensor 29 is electrically connected to electronic components within the actuator 10. As discussed in greater detail below, either one of the daylight sensor 28 and signal sensor 29 can generate an electrical control signal to activate the actuator 10 and thereby cause the mini-blind 14 to move toward the open or closed configuration, as appropriate.

Preferably, both the daylight sensor 28 and signal sensor 29 are light detectors which have low dark currents, to conserve power when the actuator 10 is deactivated. More particularly, the sensors 28, 29 have dark currents equal to or less than about 10^{-8} amperes and preferably equal to or less than about $2x10^{-9}$ amperes. In the presently preferred embodiment, the daylight sensor 28 and signal sensor 29 are selected double-end type phototransistors made by Sharp Electronics, part no. PT 460.

Referring now to Figure 3, the actuator 10 includes a hollow, generally parallelepiped-shaped lightweight metal or molded plastic clamshell housing 30. As shown, the housing 30 has a first half 32 which is snappingly engageable with a second half 34. Alternatively, the first half 32 of the housing 30 can be glued or bolted to the second half 34. Two openings 36, 38 are formed in the housing 30 to establish the channel 22 shown

in Figure 1. As also shown in Figures 1 and 3, the housing 30 has a slightly convex front surface 39.

As shown best in Figure 3, a molded plastic battery carriage 40 is positioned within the housing 30. Preferably, the battery carriage 40 generally conforms to the inside contour of the housing 30, i.e., the housing 30 "captures" the battery carriage 40 and holds the carriage 40 stationary within the housing 30.

A power supply 42 is mounted in the battery carriage 40. In the preferred embodiment, the power supply 42 includes four type AA direct current (dc) alkaline batteries 44, 46, 48, 50. The batteries 44, 46, 48, 50 are mounted in the battery carriage 40 in electrical series with each other by means well-known in the art. For example, in the embodiment shown, each of the batteries 44, 46, 48, 50 is positioned between respective positive and negative metal clips 45 to hold the batteries 44, 46, 48, 50 within the carriage 40 and to establish an electrical path between the batteries 44, 46, 48, 50 and their respective clips.

Figure 3 further shows that an electronic circuit board 52 is positioned in the housing 30 adjacent the battery carriage 40. It is to be understood that an electrical path is established between the battery clips and the electronic circuit board. Consequently, the batteries 44, 46, 48, 50 are electrically connected to the electronic circuit board 52. The electronic components of the circuit board 52 are discussed in more detail in reference to Figure 7 below.

Still referring to Figure 3, a lightweight metal or molded plastic gear box 56 is attached to or formed integrally with the battery carriage 40. The gear box 56 is formed with a gear box opening 58 for receiving the baton 12 therein.

Figure 3 also shows that a small, lightweight electric motor 60 is attached to the gear box 56, preferably by bolting the motor 60 to the gear box 56. In the presently preferred embodiment, the motor 60 is a direct current (dc) motor, type FC-130-10300, made by Mabuchi Motor America Corp. of New York. As more fully disclosed in reference to Figure

4 below, the gear box 56 holds a gear assembly which causes the baton 12 to rotate at a fraction of the angular velocity of the motor 60. As further discussed below more fully in reference to Figure 7, the motor 60 can be energized by the power supply 42 through the circuit board 52.

Now referring to Figures 4, 5A, 5B, and 6, the details of the gear box 56 can be seen. As shown best in Figure 4, the gear box 56 includes a plurality of lightweight metal or molded plastic gears, i.e., a gear assembly, and each gear is rotatably mounted within the gear box 56. In the presently preferred embodiment, the gear box 56 is a clamshell structure which includes a first half 62 and a second half 64, and the halves 62, 64 of the gear box 56 are snappingly engageable together by means well-known in the art. For example, in the embodiment shown, a post 66 in the second half 64 of the gear box 56 engages a hole 68 in the first half 62 of the gear box 56 in an interference fit to hold the halves 62, 64 together.

Each half 62, 64 includes a respective opening 70, 72, and the openings 70, 72 of the gear box 56 establish the gear box opening 58 (Figure 3) and are coaxial with the channel 22 of the housing 30 for slidably receiving the baton 12 therethrough.

As shown in Figure 4, a motor gear 74 is connected to the rotor 76 of the motor 60. In turn, the motor gear 74 is engaged with a first reduction gear 78, and the first reduction gear 78 is engaged with a second reduction gear 80.

As shown in Figure 4, the second reduction gear 80 is engaged with a main reduction gear 82. To closely receive a hexagonally-shaped baton, the main reduction gear 82 has a hexagonally-shaped channel 84. As intended by the present invention, the channel 84 of the main reduction gear 82 is coaxial with the openings 70, 72 (and, thus, with the gear box opening 58 of the gear box 56 shown in Figure 3). Consequently, the channel 84 of the main reduction gear 82 is also coaxial with the channel 22 of the housing 30, for receiving the baton 12 therethrough.

It can be appreciated in reference to Figure 4 that when the main reduction gear 82 is rotated, and the baton 12 is engaged with the channel 84 of the main reduction gear 82,

the sides of the channel 84 contact the baton 12 to prevent rotational relative motion between the baton 12 and the main reduction gear 82. Further, the reduction gears 78, 80, 82 cause the baton 12 to rotate at a fraction of the angular velocity of the motor 60. Preferably, the reduction gears 78, 80, 82 reduce the angular velocity of the motor 60 such that the baton 12 rotates at about one revolution per second.

It is to be understood that the channel 84 of the main reduction gear 82 can have other shapes suitable for conforming to the shape of the particular baton being used. For example, for a baton (not shown) having a circular transverse cross-sectional shapes, the channel 84 will have a circular cross-section. In such an embodiment, a set screw (not shown) is threadably engaged with the main reduction gear 82 for extending into the channel 84 to abut the baton and hold the baton stationary within the channel 84. In other words, the gears 74, 78, 80, 82 described above establish a coupling which operably engages the motor 60 with the baton 12.

In cross-reference to Figures 4, 5A, and 5B, the main reduction gear 82 is formed on a hollow shaft 86, and the shaft 86 is closely received within the opening 70 of the first half 62 of the gear box 56 for rotatable motion therein. Also, a first travel limit reduction gear 88 is formed on the shaft 86 of the main reduction gear 82. The first travel limit reduction gear 88 is engaged with a second travel limit reduction gear 90, and the second travel limit reduction gear 90 is in turn engaged with a third travel limit reduction gear 92.

Figure 4 best shows that the third travel limit reduction gear 92 is engaged with a linear rack gear 94. Thus, the main reduction gear 82 is coupled to the rack gear 94 through the travel limit reduction gears 88, 90, 92, and the rotational speed (i.e., angular velocity) of the main reduction gear 82 is reduced through the first, second, and third travel limit reduction gears 88, 90, 92. Also, the rotational motion of the main reduction gear 82 is translated into linear motion by the operation of the third travel limit reduction gear 92 and rack gear 94.

Figure 4 shows that the second reduction gear 80 and second and third travel limit reduction gears 90, 92 are rotatably engaged with respective metal post axles 80a, 90a, 92a

which are anchored in the first half 62 of the gear box 56. In contrast, the first reduction gear 78 is rotatably engaged with a metal post axle 78a which is anchored in the second half 64 of the gear box 56.

Still referring to Figure 4, the rack gear 94 is slidably engaged with a groove 96 that is formed in the first half 62 of the gear box 56. First and second travel limiters 98, 100 are connected to the rack gear 94. In the embodiment shown, the travel limiters 98, 100 are threaded, and are threadably engaged with the rack gear 94. Alternatively, travel limiters (not shown) having smooth surfaces may be slidably engaged with the rack gear 94 in an interference fit therewith, and may be manually moved relative to the rack gear 94.

As yet another alternative, travel limiters (not shown) may be provided which are formed with respective detents (not shown). In such an embodiment, the rack gear is formed with a channel having a series of openings for receiving the detents, and the travel limiters can be manipulated to engage their detents with a preselected pair of the openings in the rack gear channel. In any case, it will be appreciated that the position of the travel limiters of the present invention relative to the rack gear 94 may be manually adjusted.

Figure 4 shows that each travel limiter 98, 100 has a respective abutment surface 102, 104. In cross-reference to Figures 4 and 6, the abutment surfaces 102, 104 can contact a reed switch 106 which is mounted on a base 107. The base 107 is in turn anchored on the second half 64 of the gear box 56. As intended by the present invention, the reed switch 106 includes electrically conductive, preferably beryllium-copper first and second spring arms 108, 112 and an electrically conductive, preferably beryllium-copper center arm 110. As shown, one end of each spring arm 108, 112 is attached to the base 107, and the opposite ends of the spring arms 108, 112 can move relative to the base 107. As also shown, one end of the center arm 110 is attached to the base 107.

When the main reduction gear 82 has rotated sufficiently counterclockwise, the abutment surface 102 of the first travel limiter 98 contacts the first spring arm 108 of the reed switch 106 to urge the first spring arm 108 against the stationary center arm 110 of the reed switch 106. On the other hand, when the main reduction gear 82 has rotated clockwise

a sufficient amount, the abutment surface 104 of the second travel limiter 100 contacts the second spring arm 112 of the reed switch 106 to urge the second spring arm 112 against the stationary center arm 110 of the reed switch 106.

Figure 6 best shows that an electrically conductive, preferably gold-plated contact 114 is deposited on the first spring arm 108, and electrically conductive, preferably gold-plated contacts 116a, 116b are deposited on opposed surfaces of the center arm 110. Also, an electrically conductive, preferably gold-plated contact 118 is deposited on the second spring arm 112.

Thus, when the first spring arm 108 is urged against the center arm 110, the contact 114 of the first spring arm 108 contacts the contact 116a of the center arm 110 to complete an electrical circuit. On the other hand, when the second spring arm 112 is urged against the center arm 110, the contact 118 of the second spring arm 112 contacts the contact 116b of the center arm 110 to complete an electrical circuit. It can be appreciated in reference to Figure 4 that the reed switch 106 is electrically connected to the circuit board 52 (Figure 3) via an electrical lead 119.

As more fully disclosed below in reference to Figure 7, the completion of either one of the electrical circuits discussed above causes the motor 60 to deenergize and consequently stops the rotation of the main reduction gear 82 and, hence, the rotation the baton 12. Stated differently, the travel limiters 98, 100 may be manually adjusted relative to the rack gear 94 as appropriate for limiting the rotation of the baton 12 by the actuator 10.

Referring briefly back to Figure 4, spacers 120, 122 may be molded onto the halves 62, 64 for structural stability when the halves 62, 64 of the gear box 56 are snapped together.

Now referring to Figure 7, the details of the electrical circuitry contained on the circuit board 52 may be seen. In overview, the electrical circuit board 52 includes a pulse modulation detector 130 and a beam and manual direction controller 132 for processing the user command signal generated by the user command signal generator 31 and sensed by the

signal sensor 29 (Figure 1) for opening and closing the blind 14. Also, to operate the blind 14 in response to a predetermined level of sunlight as sensed by the daylight sensor 28 (Figure 3), the circuit board 52 includes a daylight detector 134, a daylight direction controller 136, and an edge detector 138. The edge detector 138 prevents operation of the blind 14 in response to spurious light signals, e.g., automobile headlights. Additionally, the circuit board 52 has an output amplifier 140 for powering the motor 60 shown in Figure 3.

For clarity of disclosure, the discussion below focusses on the salient components of the electrical circuit board 52. Table 1 below, however, sets forth the values of all of the resistors and capacitors of the circuit board 52 of the preferred embodiment.

Figure 7 shows that the pulse modulation detector 130 includes a first type 4093 Schmidt trigger 142 that is electrically connected to the signal sensor 29 for receiving the pulse modulated detection signal therefrom. From the first trigger 142, the signal is sent to first and second stages 144, 146 of a type 4538 activity sensor, and from thence to a first type 4093 NAND gate inverter 148. The NAND gate inverter 148 functions as an inverter, generating a FALSE signal output signal from two TRUE input signals and a TRUE signal output otherwise. From the NAND gate inverter 148, the signal is sent through a first type 1N4148 diode 150 to a capacitor C2. Also, from the second stage 146, the signal is sent through a second type 1N4148 diode 152 to a capacitor C8.

When the first trigger 142 senses a pulsed optical signal from the signal sensor 29, the first trigger 142 generates an output signal having the same pulse rate as the optical signal from the signal sensor 29. When the output signal of the trigger 142 has a pulse rate greater than 5000μs, the output signal of the first stage 144 is FALSE. Consequently, the output of the NAND gate inverter 148 is TRUE. A TRUE output signal from the NAND gate inverter 148 maintains a positive voltage on the capacitor C2. As more fully discussed below, when a positive voltage is maintained on the capacitor C2, energization of the motor 60 is prevented.

Additionally, when the output signal of the first trigger 142 has a pulse rate less than fifteen thousand microseconds (1500μs), the output signal of the second stage 146 will be

FALSE. Consequently, the capacitor C8 discharges, which causes the input signal of the NAND gate inverter 148 from the second stage 146 to become FALSE. In response, the output of the NAND gate inverter 148 is TRUE, which, as discussed above, maintains a positive voltage on the capacitor C2 to prevent energization of the motor 60.

In contrast, when the output signal of the first trigger 142 has a pulse rate between fifteen hundred microseconds and five thousand microseconds (1500μs-5000μs) (indicating reception by the signal sensor 29 of a proper optical control signal having a pulse rate of between 1500μs-5000μs), the output signals of both the first and second stages 144, 146 are TRUE. In turn, the output signal of the first NAND gate inverter 148 is FALSE, permitting the capacitor C2 to discharge and thereby permit energization of the motor 60.

The skilled artisan will appreciate that the values of R2 and C2 are selected to require that the output signal of the first NAND gate inverter 148 remains FALSE for at least three hundred thirty milliseconds (330ms) before the capacitor C2 fully discharges to enable energization of the motor 60. The skilled artisan will further appreciate that when a two-position switch 154 having an "ON" position and an "OFF" position (Figures 1 and 7) is manually moved to the "OFF" position, voltage from the power supply 42 is conducted to the capacitor C2 to prevent the automatic energization of the motor 60 described above. The motor 60 may nevertheless be energized when the two-position switch 154 is in the "OFF" position, however, by manually depressing a thumbswitch 156 (Figures 1 and 7), as more fully disclosed below.

Figure 7 shows that the beam and manual direction controller 132 includes a second type 4093 NAND gate inverter 158, the input signal of which is the output signal of the first NAND gate inverter 148. Upon receipt of a "FALSE" input signal from the first NAND gate inverter 148 (indicating reception by the signal sensor 29 of a proper optical control signal having a pulse rate of between 1500μs-5000μs for at least 330ms), the second NAND gate inverter 158 generates an output clocking signal. Also, Figure 7 shows that when the thumbswitch 156 is depressed, a "FALSE" input signal is sent to the second NAND gate inverter 158, and an output clocking signal is consequently generated by the inverter 158.

The output clocking signal of the second NAND gate inverter 158 is sent in turn to a type 4013 "D" motor run flip-flop 160. As shown in Figure 7, the flip-flop 160 is in the so-called "toggle" configuration (i.e., pin 2 of the flip-flop 160 is electrically connected to its pin 5). Accordingly, the flip-flop 160 changes state each time it receives a clocking signal.

Figure 7 shows that the motor run flip-flop 160 is electrically connected to a type 4013 "D" motor direction flip-flop 162. Like the motor run flip-flop 160, the motor direction flip-flop 162 is in the "toggle" configuration.

In accordance with the present invention, the motor run flip-flop 160 generates either a "motor run" or "motor stop" output signal, while the motor direction flip-flop 162 generates either a "clockwise" or "counterclockwise" output signal. As discussed above, each time the motor run flip-flop 160 receives a clocking signal, it changes state. Also, each time the motor run flip-flop 160 is reset to a "stop motor" state, it toggles the motor direction flip-flop 162 via a line 163 to change state.

Thus, with the motor direction flip-flop 162 initially in the clockwise state, to cause the motor run flip-flop 160 to generate a "motor run" output signal, the user signal generator 31 (Figure 1) is manipulated to generate a first user command signal (or the thumbswitch 156 is depressed). Then, to cause the motor run flip-flop 160 to generate a "motor stop" output signal, the user signal generator 31 is manipulated to generate a second user command signal (or the thumbswitch 156 is again depressed).

Upon receiving the second clocking signal, the motor run flip-flop 160 toggles the motor direction flip-flop 162 to change state (i.e., to counterclockwise). Then, manipulation of the user signal generator 31 to generate yet a third user command signal (or again depressing the thumbswitch 156) causes the motor run flip-flop to generate a "motor run" signal. Yet a fourth signal causes the motor 60 to again stop, and so on.

Additionally, the state of the motor run flip-flop 160 is caused to change when the motor 60 reaches its predetermined clockwise or counterclockwise limits of travel, as

established by the positions of the travel limiters 98, 100 relative to the rack gear 94 (Figure 4). This prevents continued energization of the motor 60 after the motor 60 has reached a travel limit, as sensed by the reed switch 106.

In describing this means of changing the state of the motor run flip-flop 160 in response to travel motion limitations, the motor direction flip-flop 162 generates either a clockwise ("CW") output signal or a counterclockwise ("CCW") output signal, as mentioned above and indicated in Figure 7 by lines CW and CCW. In the presently preferred embodiment, clockwise rotation of the motor 60 corresponds to opening the blind 14, while counterclockwise rotation of the motor 60 corresponds to closing, i.e., shutting, the blind 14.

In further disclosing the cooperation of the motor direction flip-flop 162 with the motor run flip-flop 160, the "CW" output signal of the motor direction flip-flop 162 is sent to a first type 4093 limit switch NAND gate 164, whereas the "CCW" output signal of the motor direction flip-flop 162 is sent to a second type 4093 limit switch NAND gate 166. The output signals of the first and second limit switch NAND gates 164, 166 are sent in turn to a third type 4093 limit switch NAND gate 168, and the output signal of the third limit switch NAND gate 168 is sent to the motor run flip-flop 160.

Figure 7 also shows that the first and second limit switch NAND gates 164, 166 receive respective upper limit reached ("USW") and lower limit reached ("LSW") input signals. As shown in Figure 7, the "USW" signal is generated by a type 4093 USW NAND gate 170, and the "LSW" signal is generated by a type 4093 LSW NAND gate 172.

Both NAND gates 170, 172 receive input signals from a type 4093 direction NAND gate 174. In turn, the direction NAND gate 174 receives an input signal indicating the direction of actual rotation of the motor 60 (i.e., the "motor run CW" signal or the "motor run CCW" signal. In Figure 7, the "motor run CW" signal has been designated "DRCW", and the "motor run CCW" signal has been designated "DRCCW", and the generation of both the "DRCW" and "DRCCW" signals is discussed more fully below.

The output signal of the direction NAND gate 174 is always "TRUE", unless it senses that the motor 60 has been simultaneously given both a "motor run CW" ("DRCW") signal and a "motor run CCW" ("DRCCW") signal, in which case the output signal of the direction NAND gate is "FALSE". Thus, the "DRCCW" and "DRCW" signals are gated as described above to prevent damaging the output amplifier 140 if the motor 60 is erroneously commanded to simultaneously rotate in both the clockwise and counterclockwise directions.

Additionally, the USW NAND gate 170 receives an input signal from the reed switch 106 when the abutment surface 102 of the travel limiter 98 (Figure 4) urges the first arm 108 against the center arm 110 of the switch 106, indicating that the rack gear 94 (and, hence, the motor 60) has reached the predetermined upper, i.e., clockwise, limit of travel. Also, the LSW NAND gate 172 receives an input signal from the reed switch 106 when the abutment surface 104 of the travel limiter 100 (Figure 4) urges the second arm 112 against the center arm 110 of the switch 106, indicating that the rack gear 94 (and, hence, the motor 60) has reached the predetermined lower, i.e., counterclockwise, limit of travel.

Accordingly, upon receipt of the appropriate signal from the reed switch 106, the USW NAND gate 170 generates the USW signal. Likewise, upon receipt of the appropriate signal from the reed switch 106, the LSW NAND gate 172 generates the LSW signal.

Further, independent of the position of the reed switch 106, in the event that the output signal of the direction NAND gate 174 is "FALSE", the USW NAND gate 170 generates a USW signal, and the LSW NAND gate 172 generates a LSW signal. Consequently, the motor 60 will be caused to stop if the direction NAND gate 174 senses the simultaneous existence of both a "motor run CW" (i.e., a "DRCW") signal and a "motor run CCW" (i.e., a "DRCCW") signal.

As discussed above, the LSW and USW signals are sent to the first and second limit switch NAND gates 164, 166, which generate input signals to the third limit switch NAND gate 168. In turn, the third limit switch NAND gate 168 sends a clocking signal to the motor run flip-flop 160 to cause the motor run flip-flop 160 to change state, i.e., to the "motor off" state.

Accordingly, when the motor 60 is rotating clockwise and the upper (i.e., clockwise) limit of rotation is reached, the reed switch 106 generates a signal which is sent via the following path to change the state of the motor run flip-flop 160 to cause the motor 60 to stop: USW NAND gate 170, first limit switch NAND gate 164, third limit switch NAND gate 168.

Likewise, when the motor 60 is rotating counterclockwise and the lower (i.e., counterclockwise) limit of rotation is reached, the reed switch 106 generates a signal which is sent via the following path to change the state of the motor run flip-flop 160 to cause the motor 60 to stop: LSW NAND gate 172, second limit switch NAND gate 166, third limit switch NAND gate 168.

Figure 7 additionally shows that the "USW" and "LSW" signals are also sent to the motor direction flip-flop 162 via respective resistors R22, R23 to reset the flip-flop 162 to the appropriate state. Stated differently, the "USW" signal is sent to the motor direction flip-flop 162 via resistor R22 to reset the flip-flop 162 to the counterclockwise state, and the "LSW" signal is sent to the motor direction flip-flop 162 via resistor R23 to reset the flip-flop 162 to the clockwise state, when the appropriate travel limits have been reached.

The output signals of the flip-flops 160, 162 are each gated to type 4093 flip-flop CW and CCW NAND gates 176, 178. More specifically, both output signals of the motor run flip-flop 160 are gated to the NAND gates 176, 178, whereas only the "CW" output signal of the motor direction flip-flop 162 is gated to the CW NAND gate 176, and the "CCW" signal from the motor direction flip-flop 162 is gated to the CCW NAND gate 178.

As intended by the present invention, the flip-flop CW NAND gate 176 generates a "motor run CW" (i.e., the "DRCW") output signal only when the motor run flip-flop 160 inputs a "motor run" signal to the CW NAND gate 176 and the motor direction flip-flop 162 inputs a "CW" signal to the NAND gate 176. Likewise, the flip-flop CCW NAND gate 178 generates a "motor run CCW" (i.e., "DRCCW") output signal only when the motor run flip-flop 160 inputs a "motor run" signal to the CCW NAND gate 178 and the motor direction flip-flop 162 inputs a "CCW" signal to the NAND gate 178.

Now referring to the daylight detector 134 shown in Figure 7, the purpose of which is to energize the motor 60 to open or close the blind 14 upon detection of a predetermined level of light that is present at the daylight sensor 28, the daylight sensor 28 is electrically connected to a first type 2N3904 transistor Q2. Accordingly, when light impinges upon the daylight sensor 28, the sensor 28 sends a signal to the transistor Q2.

If desired, energization of the motor 60 in response to signals generated by the daylight sensor 28 can be disabled by appropriately manipulating a two-position daylight disable switch 180. The switch 180 has an "AUTO" position, wherein automatic operation of the actuator 10 in response to signals from the daylight sensor 28 is enabled, and an "OFF" position, wherein automatic operation of the actuator 10 in response to signals from the daylight sensor 28 is disabled.

After receiving the signal from the daylight sensor 28, the first transistor Q2 turns on, and consequently causes a first type 2N3906 transistor Q1 to turn on. The output signal of the second transistor Q1 is sent via a resistor R4 to the base of the first transistor Q2, to establish a hysterisis-based electronic signal latch. Also, the output signal of the second transistor Q1 is sent to a type 4093 light NAND gate 182. Whenever the light NAND gate 182 receives a signal from the second transistor Q1, the NAND gate 182 changes state.

Figure 7 shows that the output signal generated by the light NAND gate inverter 182 is sent to the so-called "D" input ports of type 4013 first and second stages 184, 186 of the daylight direction controller 136. The output signals of the stages 184, 186 are "motor run CW ("DRCW") and "motor run CCW" (DRCCW") signals, and are in turn respectively sent to type 4093 CW and CCW NAND gate motor controllers 188, 190 of the output amplifier circuitry 140.

To generate their motor run output signals, the stages 184, 186 of the daylight direction controller 136 must also receive input signals from the edge detector 138. As intended by the present invention, the edge detector 138 functions to prevent automatic operation of the blind 14 in the presence of detection signals generated by the daylight detector 136 in response to spurious light signals, e.g., automobile headlights at night.

Figure 7 shows that the edge detector 138 includes a type 4077 exclusive exclusive NOR gate 194. As shown, the exclusive NOR gate 194 receives a first input signal directly from the light NAND gate 182 and a second input signal which originates at the NAND gate 182 and which is passed through the network established by a resistor R13 and a capacitor C4. With this arrangement, the exclusive NOR gate 194 generates a positive pulse output signal each time the light NAND gate 182 changes state.

As further shown in Figure 7, the output signal of the exclusive NOR gate 194 is sent to a type 4020 fourteen (14) stage binary counter 196. The counter 196 is associated with an oscillator 198 that includes a type 4093 NAND gate 199, and the counter is also associated with first and second type 4077 exclusive NOR gate inverters 200, 202. The exclusive NOR gate inverters 200, 202 cooperate to ensure correct phasing of the oscillator output clocking signal.

As disclosed above, when a detection signal is received from the light NAND gate 182 of the daylight detector 134, this signal is sent to the exclusive NOR gate 194 in the edge detector 138 and to the first and second stages 184, 186 in the daylight direction controller 136. The first and second stages 184, 186, however, do not immediately generate an output signal in response.

Instead, the exclusive NOR gate 194 immediately sends an output signal to the counter 196. In response, the counter 196 enables the oscillator 198 to generate output clocking signals, and the counter 196 commences counting the output clocking signals from the oscillator 198 until the first thirteen (13) stages of the counter have been filled with clocking signals. Then, the counter 196 sends an output signal to each of the first and second stages 184, 186 of the daylight direction controller 136.

In the embodiment shown, the oscillator 198 operates between about five Hertz and ten Hertz (5Hz-10Hz), and the thirteen (13) stages of counter 196 can store a total of eight thousand one hundred ninety two (8192) clocking signals. With this combination of structure, the counter 196 sends an output signal to the first and second stages 184, 186 of

the daylight direction controller 136 about fifteen to twenty (15-20) minutes after receiving its input signal from the exclusive NOR gate 194.

Figure 7 shows that the first and second stages 184, 186 of the daylight direction controller 136 receive both the signal from the counter 196, and the signal from the light NAND gate 182. Depending upon whether the blind 14 is to be opened at the onset of day or vice-versa, based upon the state of the light amplifier 182 as indicated by whether its output signal is "TRUE" or "FALSE", one of the stages 184, 186 will send a motor run signal to its associated NAND gate motor controller 188, 190 of the output amplifier circuitry 140 to cause the blind 14 to be opened or closed.

In the embodiment shown, the first stage 184 sends an output DRCW signal to the CW NAND gate motor controller 188 when the blind 14 is desired to be open. On the other hand, the second stage 186 sends an output DRCCW signal to the CCW NAND gate motor controller 190 when the blind 14 is desired to be shut. In either case, the blind 14 is operated only after a predetermined light level has been sensed continuously for 15-20 minutes by the daylight sensor 28.

Also, Figure 7 shows that the first stage 184 receives the "USW" signal, while the second stage 186 receives the "LSW" signal. Upon receipt of the "USW" signal, indicating that the blind 14 is fully open, the first stage 184 stops sending its "motor run" output signal to the NAND gate motor controller 188. Likewise, upon receipt of the "LSW" signal, indicating that the blind 14 is fully shut, the second stage 186 stops sending its "motor run" output signal to the NAND gate motor controller 190.

The output amplifier 140 includes the two NAND gate motor controllers 188, 190. As shown in Figure 7, the NAND gate motor controllers 188, 190 each receive inputs from the beam and manual detection controller 132, for opening and closing the blind 14 in response to user-generated signals from either the pushbutton 156 or the user signal generator 31, and from the daylight direction controller 136, for opening and closing the blind 14 in response to predetermined levels of daylight.

More particularly, the CW NAND gate motor controller 188 receives a DRCW input signal from the flip-flop CW NAND gate 176 only when the motor run flip-flop 160 inputs a "motor run" signal to the CW NAND gate 176 and when the motor direction flip-flop 162 inputs a "CW" signal to the NAND gate 176. Also, the CW NAND gate motor controller 188 can receive an input DRCW signal from the first stage 184.

On the other hand, the CCW NAND gate motor controller 190 receives a DRCCW input signal from the flip-flop CCW NAND gate 178 only when the motor run flip-flop 160 inputs a "motor run" signal to the CCW NAND gate 178 and when the motor direction flip-flop 162 inputs a "CCW" signal to the NAND gate 178. Also, the CCW NAND gate motor controller 190 can receive an input DRCCW signal from the second stage 186.

Upon receipt of either of its input DRCW signals, the CW NAND gate motor controller 188 sends the DRCW signal to a type 2N3904 CW gating transistor Q7 to turn on the gating transistor Q7, and the gating transistor Q7 then turns on a type 2N4403 CW power transistor Q6 and a type 2N4401 CW power transistor Q5. Once energized, the CW power transistors Q6, Q5 complete the electrical path (starting at a terminal 204) from the power supply 42, to the motor 60, and to ground (represented at a ground terminal 206) such that the motor 60 is caused to rotate clockwise to thereby move the blind 14 toward the open configuration.

In contrast, upon receipt of either of its DRCCW input signals, the CCW NAND gate motor controller 190 sends the DRCCW signal to a type 2N3904 CCW gating transistor Q4 to turn on the gating transistor Q4. In turn, the gating transistor Q4 turns on a type 2N4403 CCW power transistors Q3 and a type 2N4401 CCW power transistor Q8. Once energized, the CCW power transistors Q8, Q3 complete the electrical path (starting at a terminal 204) from the power supply 42, to the motor 60, and to ground (represented at a ground terminal 206) such that the motor 60 is caused to rotate counterclockwise to thereby move the blind 14 toward the closed configuration. Thus, the circuitry described above essentially functions as an electronic power switch having an open configuration and a closed configuration for selectively energizing the motor 60.

To conserve power when it is not desired to move the blind 14, power conservation resistors R15, R17, R20, R21 are provided to maintain the transistors Q3, Q5, Q6, Q8 off in the absence of a signal from the NAND gate motor controllers 188, 190.

The skilled artisan will appreciate that with the combination of structure disclosed above, the life of the power supply 42 is prolonged. More particularly, under normal operating conditions, with the use of light sensors 28, 29 that have low dark currents, and the use of the power conservation resistors R15, R17, R20, R21, as well as the remainder of the electronic circuit, the four batteries 44, 46, 48, 50 can operate the blind 14 for a relatively prolonged period because the optical signal is sensed and processed energy-efficiently. The skilled artisan will further recognize, however, that the use of a larger power supply in turn facilitates the use of light sensors having high dark currents. Also, the use of relatively sophisticated electronics (e.g., transistors) in the sensor circuitry further prolongs the life of the power supply. As will accordingly be recognized by the skilled artisan, the presently preferred embodiment achieves a relatively long life for the inexpensive, simple, and convenient dc power supply 42, with comparatively simple electronic components.

TABLE 1

Resistors	Value (Ohms)	Capacitors	Value (Farads)
			0.1μ
R1	3.3M	C1	0.1μ
R2	3.3M	C2	0.1μ
R3	10M	C3	0.01μ
R4	10M	C4	3300p
R5	1.5M	C5	3300p
R6	3.3M	C6	0.01μ
R7	10M	C7	0.01μ
R8	10M	C8	
R9	1.5M		
R10	10M		
R11	10M		
R12	22M		
R13	100K		
R14	1.0K		
R15	100K		
R16	220		
R17	100K		
R18	1.0K		
R19	220		
R20	100K		
R21	100K		
R22	1.5M		
R23	1.5M		
R24	1.5M		
R25	470K		
R26	3.3M		
R27	100		
R28	3.3M		

Now referring to Figures 8 and 9, an alternate embodiment of the actuator of the present invention is shown, generally designated 300, which is adapted to rotate a tilt rod 302 that is rotatably mounted by means of a block 304 in a head rail 306 of a mini-blind 308 to open and close the blind 308. The mini-blind 308 is in all other essential respects identical in construction and operation to the blind 14 shown in Figure 1.

The actuator 300 shown in Figure 8 is essentially identical to the actuator 10 shown in Figure 1, except that the actuator 300 engages the tilt rod 302 of the blind 308 vice the operating baton (not shown) of the blind. Accordingly, the actuator 300 has a gear box 310 that is in all essential respects identical to the gear box 56 shown in Figure 4, and a channel 312 of the gear box 310 engages the tilt rod 302.

A dc motor 314 is coupled to the gear box 310, and dc batteries 316 are electrically connected to the motor 314 through the electronic circuitry of a circuit board 318. It can be appreciated in reference to Figure 8 that the circuit board 318 can be fastened to the head rail 306, e.g., by screws (not shown) or other well-known method, and the motor 314, gear box 310, and batteries 316 mounted on the circuit board 318.

A daylight sensor 320 and a signal sensor 322 are mounted on the circuit board 318 and electrically connected thereto. The sensors 320, 322 are preferably identical in construction to the sensors 28, 29 shown in Figures 1 and 2.

Also, a manually manipulable operating switch 324 is electrically connected to the circuit board 318. The switch 324 shown in Figure 8 is substantially similar to the switch 156 shown in Figure 1. Further, a three-position mode switch 326 is electrically connected to the circuit board 318. The switch 326 has an "off" position, wherein the daylight sensor 320 is not enabled, a "day open" position, wherein the blind 308 will be opened by the actuator 300 in response to daylight impinging on the sensor 320, and a "day shut" position, wherein the blind 308 will be shut by the actuator 300 in response to daylight impinging on the sensor 320.

Figure 8 further shows that a manually manipulable adjuster 328 is rotatably mounted on the circuit board 318 by means of a bracket 330. The periphery of the adjuster 328 extends beyond the head rail 306, so that a person can turn the adjuster 328.

As intended by the present invention, the adjuster 328 has a metal strip 332 attached thereto, and the strip 332 on the adjuster 328 can contact a metal tongue 334 which is mounted on the tilt rod 302 when the tilt rod 302 has rotated in the open direction.

When the strip 332 contacts the tongue 334, electrical contact is made therebetween to signal the electrical circuit shown in Figure 9 to deenergize the motor 314. Accordingly, the adjuster 328 can be rotationally positioned as appropriate such that the strip 332 contacts the tongue 334 at a predetermined angular position of the tilt rod 302. Stated differently, the tilt rod 302 has a closed position, wherein the blind 308 is fully closed, and an open position, wherein the blind 308 is open, and the open position is selectively established by manipulating the adjuster 328.

Figure 9 shows that the circuit board 318 of the actuator 300 has an electrical circuit 336 that, with the following exceptions, is in all essential respects identical to the circuit shown in Figure 7, i.e., the electrical circuit 336 facilitates the energy-efficient detection and processing of an optical signal.

More particularly, an upper electrical limit switch 338 is closed when the strip 332 contacts the tongue 334 (Figure 8), to indicate that the tilt rod 302 has rotated to the predetermined open position established by the angular position of the adjuster 328, and, hence, that the blind 308 has reached its maximum open position. When this occurs, the electrical path between the batteries 316 and the motor 314 is interrupted. As was the case with the circuit shown in Figure 7, however, the fully closed position of the blind 308 is established by an electrical switch 340 which is in turn closed by a rack gear (not shown) of the gear box 310, or by a stop (not shown) that can be fastened to one of the gears within the gear box 310.

Also, the mode switch 326 has been integrated as shown in two places in the electrical circuit 336, designated switch positions 341, 342. When the switch 326 is in the "day open" or "day shut" position, the position 341 is open, as shown. Otherwise, the position 341 is shut. A ten million ohm resistor R30 and a type 4093 NAND gate 344 are connected as shown to the position 341 of the mode switch 326.

When the switch 326 is in the "day open" position, the position 342 is open, as shown. Otherwise, the position 342 is shut. A ten million ohm resistor R29 is connected as shown to the position 342 of the mode switch 326.

The architecture of the circuit 336 shown in Figure 9 is in all essential respects identical to the architecture of the circuit shown in Figure 7, with the following exceptions. Type 4070 Exclusive OR gates 346, 348, 350, 352 (with appropriate connections to ground and/or the battery 316 voltage) have been inserted in the circuit as shown in Figure 9, in place of the exclusive NOR gates 194, 202, 200, and NAND gate 182, respectively, shown in Figure 7.

While the particular head rail-mounted mini-blind actuator as herein shown and described in detail is fully capable of attaining the above-described objects of the invention, it is to be understood that it is the presently preferred embodiment of the present invention and is thus representative of the subject matter which is broadly contemplated by the present invention, that the scope of the present invention fully encompasses other embodiments which may become obvious to those skilled in the art, and that the scope of the present invention is accordingly to be limited by nothing other than the appended claims.

WHAT IS CLAIMED IS:

1. A window blind actuator, comprising:

a window blind having a head rail and a tilt rod rotatably mounted therein;

a sensor for detecting a light signal and generating a control signal in response thereto;

a coupling engaged with the tilt rod such that movement of the coupling causes rotation of the tilt rod;

a reversible electric direct current (dc) motor operably engaged with the coupling to move the coupling;

a dc battery electrically connected to the motor; and

an electronic circuit electrically connected to the light sensor and the battery for processing the control signal from the light sensor to cause the battery to energize the motor.

2. The actuator of Claim 1, wherein the light sensor is a daylight sensor and the control signal is generated by the daylight sensor in response to a predetermined amount of light impinging on the daylight sensor.

3. The actuator of Claim 1, wherein the light sensor is a signal sensor, and the control signal is generated by the signal sensor in response to a user command signal.

4. The actuator of Claim 3, further comprising a hand-held user command signal generator for selectively generating the user command signal.

5. The actuator of Claim 1, wherein the light sensor is a phototransistor having a dark current less than about $2x10^{-9}$ amperes.

6. The actuator of Claim 2, wherein the electronic circuit comprises an edge detector for delaying energization of the motor for a predetermined time period after generation of the control signal by the daylight sensor.

7. The actuator of Claim 1, further comprising a manually manipulable adjuster, wherein the tilt rod has a closed position, wherein the blind is fully closed, and an open position, wherein the blind is open, and the open position is selectively established by manipulating the adjuster.

8. A device for opening and closing the slats of a window covering of the type having a head rail and an operator disposed therein, comprising:

an actuator including an electric motor and a coupling operably engaged with the motor, wherein the coupling contacts the operator to prevent rotational relative motion between the coupling and the operator;

a source of electrical power;

a control signal generator for generating a control signal; and

an electronic circuit electrically connected to the control signal generator and the source of electrical power for processing the control signal to cause the source of electrical power to energize the motor to move the operator.

9. A method for moving the slats of a blind by rotating the tilt rod of the blind, comprising the steps of:

(a) providing a motor, a dc battery, and an electronic circuit for receiving a control signal and processing the control signal to cause the battery to energize the motor;

(b) coupling the rotor of the motor with the tilt rod; and

(c) sensing a predetermined electromagnetic signal to generate the control signal and cause the electrical circuit between the battery and the motor to be completed to rotate the tilt rod.

10. An actuator couplable to an operating component of a blind having an open configuration and a closed configuration, comprising:

a sensor for detecting a light signal and generating a control signal in response thereto;

a coupling engageable with the operating component of the blind such that movement of the coupling causes the blind to move toward the open configuration or toward the closed configuration;

a reversible electric direct current (dc) motor operably engaged with the coupling to move the coupling;

a dc battery; and

an electronic circuit electrically connected to the sensor and the battery for processing the control signal from the sensor to cause the battery to energize the motor, wherein the electronic circuit includes an edge detector for delaying energization of the motor for a predetermined time period after generation of the control signal by the sensor.

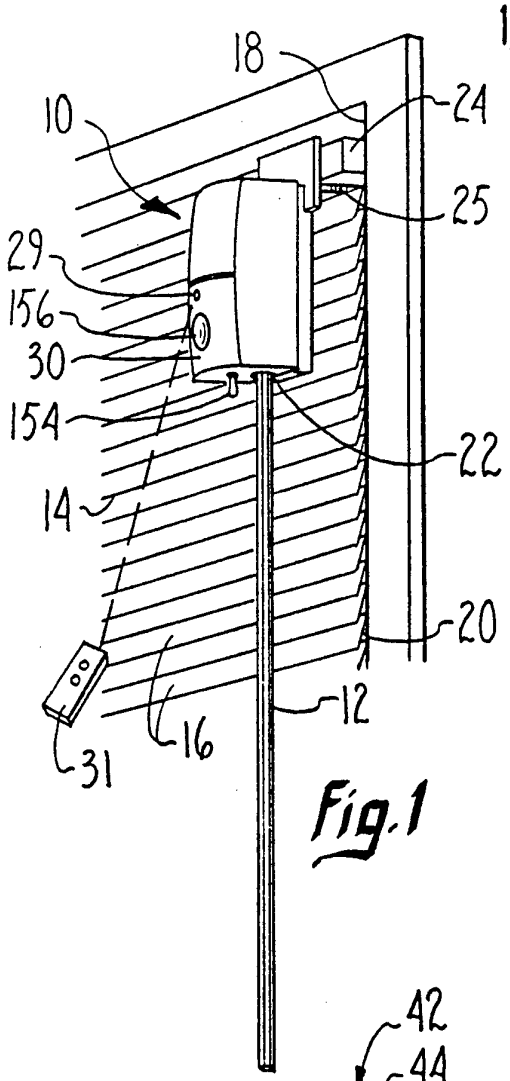

Fig.1

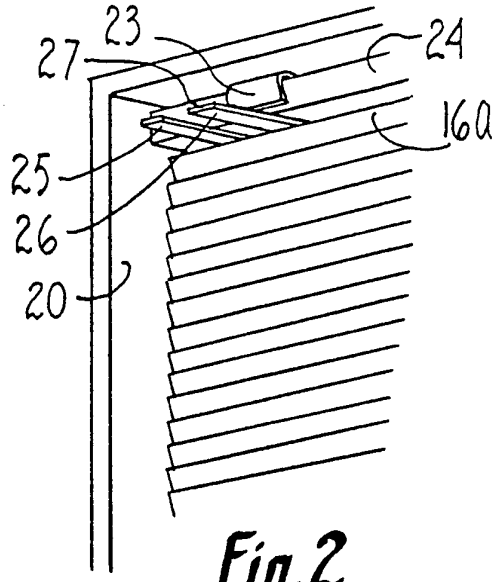

Fig.2

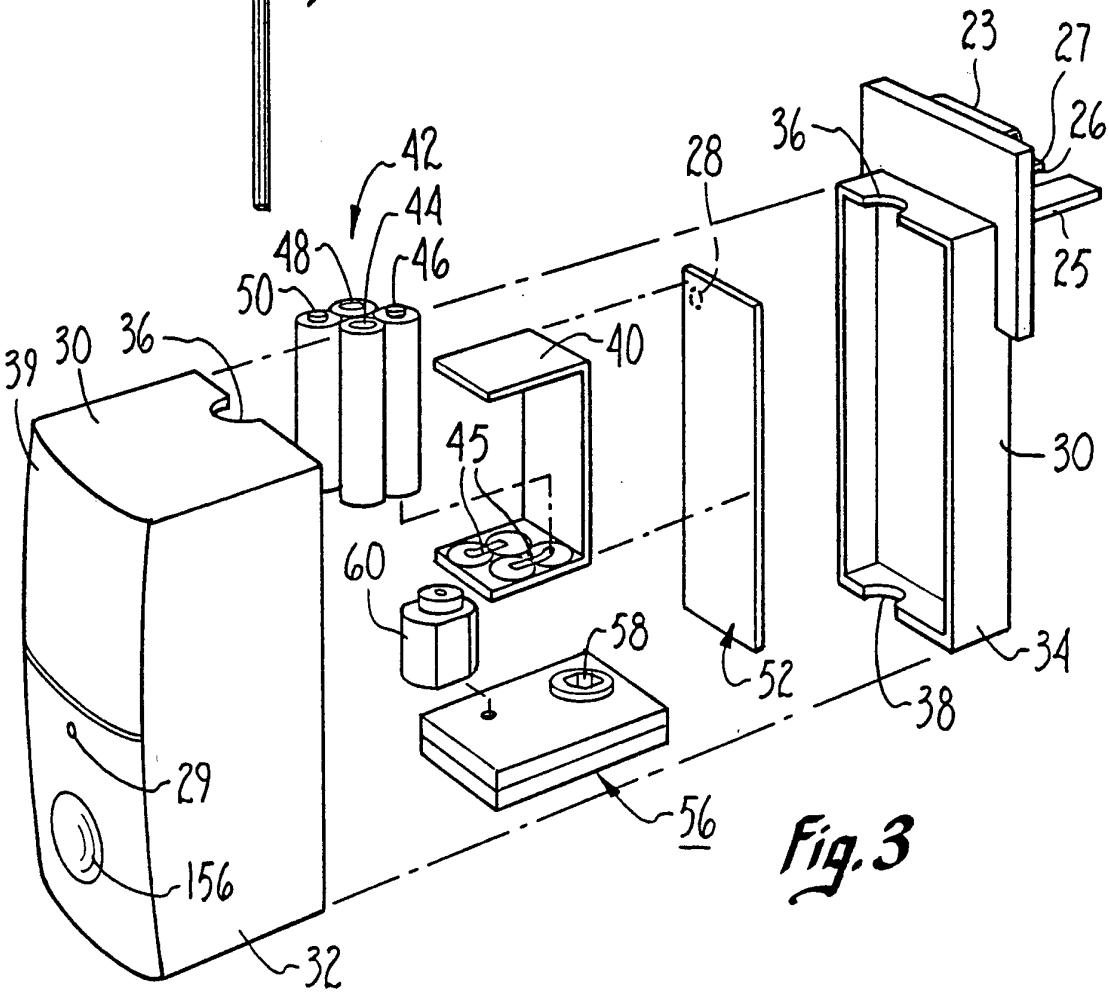

Fig.3

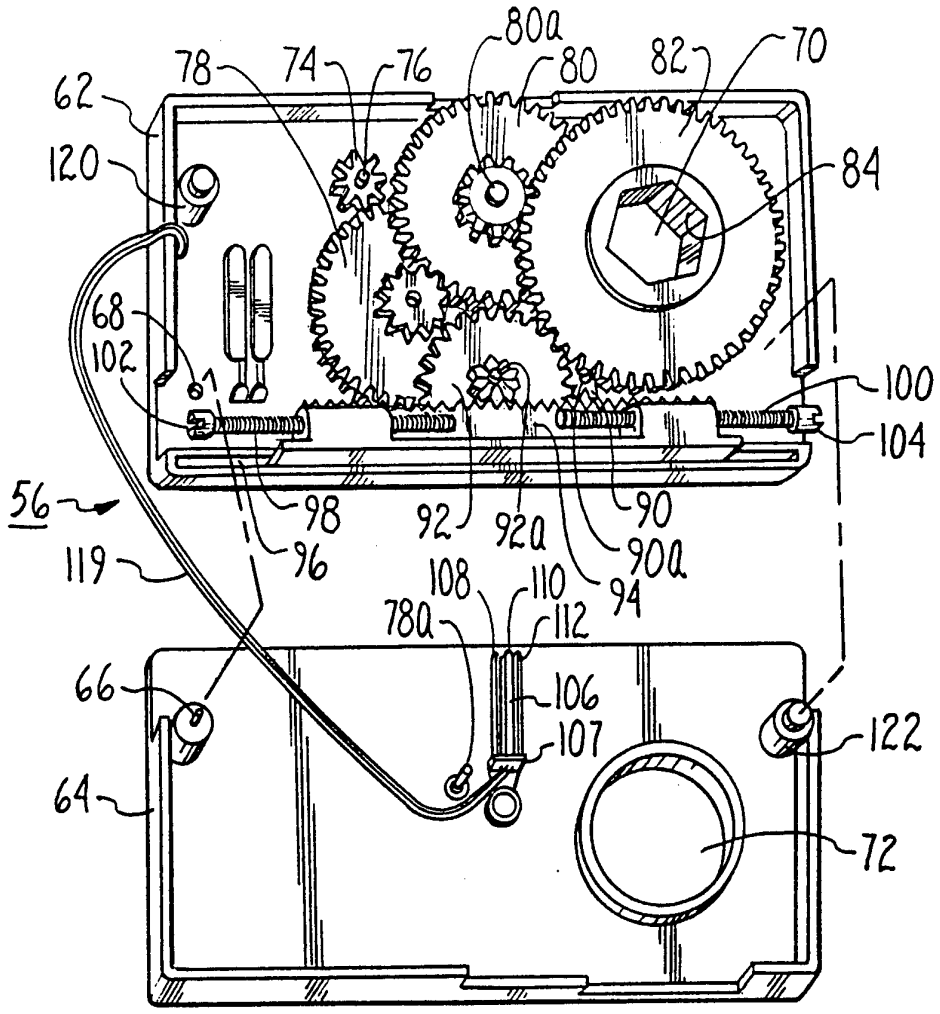

Fig. 4

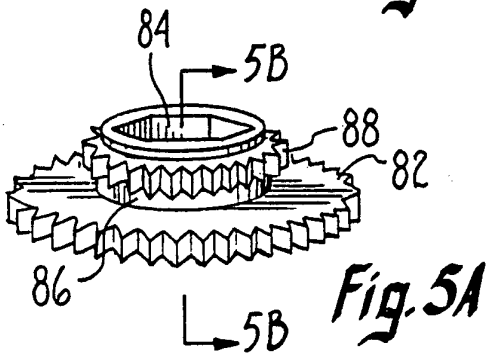

Fig. 5A

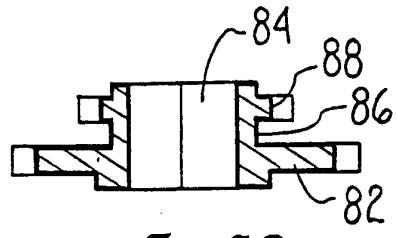

Fig. 5B

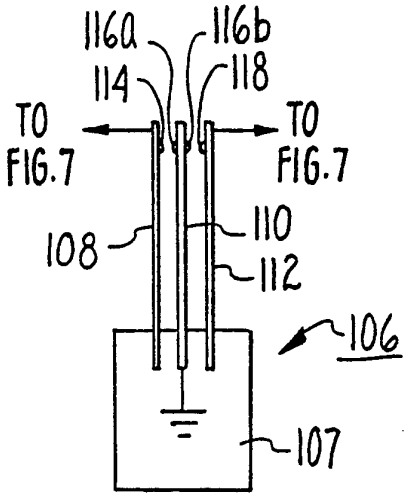

Fig. 6

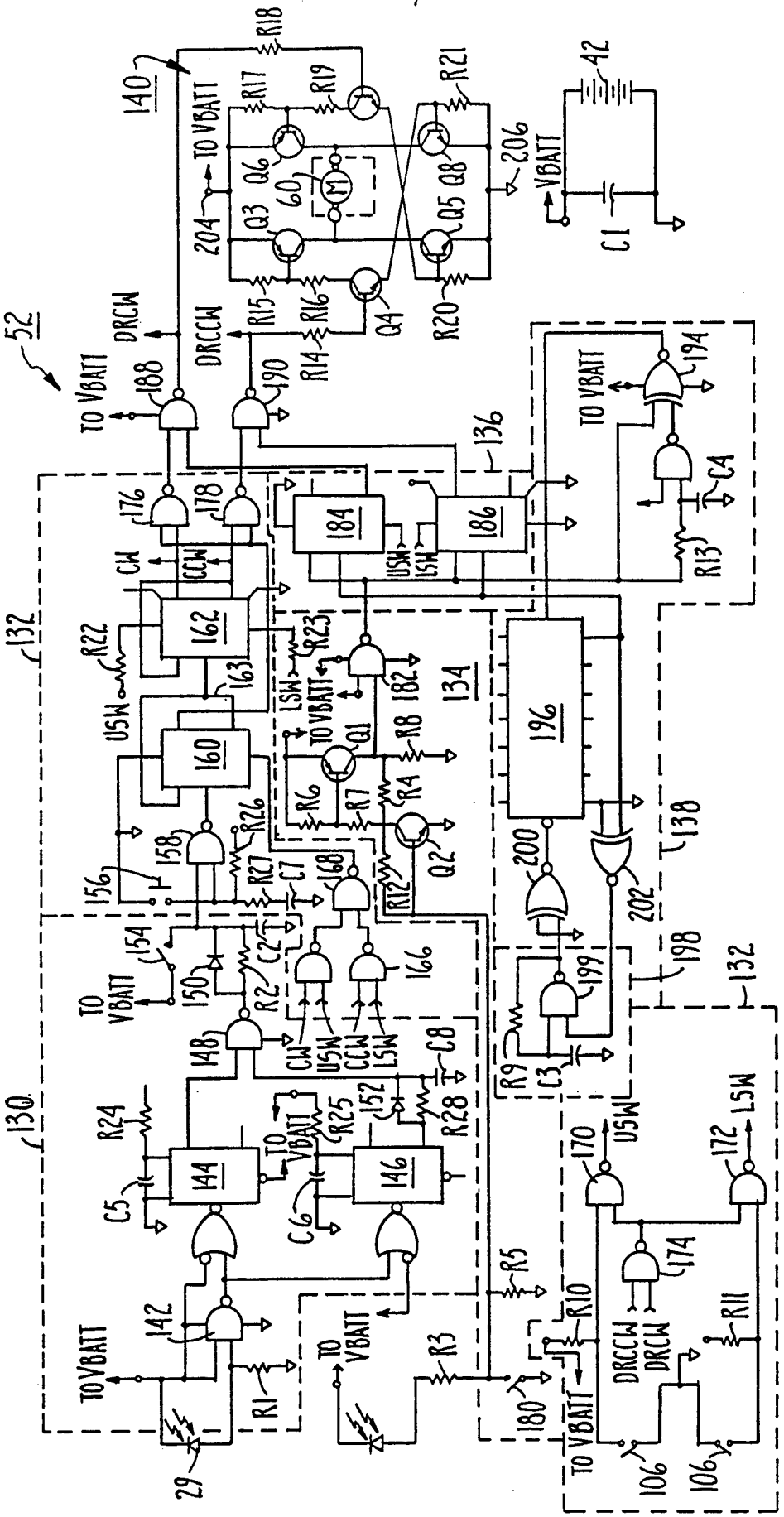
52
130
132
134
136
138
140
142
144
146
148
150
152
154
156
158
160
162
163
166
168
170
172
174
176
178
180
182
184
186
188
190
194
196
198
199
200
202
204
206
42
60
M
Q1
Q2
Q3
Q4
Q5
Q6
Q8
R1
R2
R3
R4
R5
R6
R7
R8
R9
R10
R11
R12
R13
R14
R15
R16
R17
R18
R19
R20
R21
R22
R23
R24
R25
R26
R27
R28
C1
C2
C3
C4
C5
C6
C7
C8
TO VBATT
DRCW
DRCCW
CW
CCW
USW
LSW
VBATT
29
106

Fig. 7

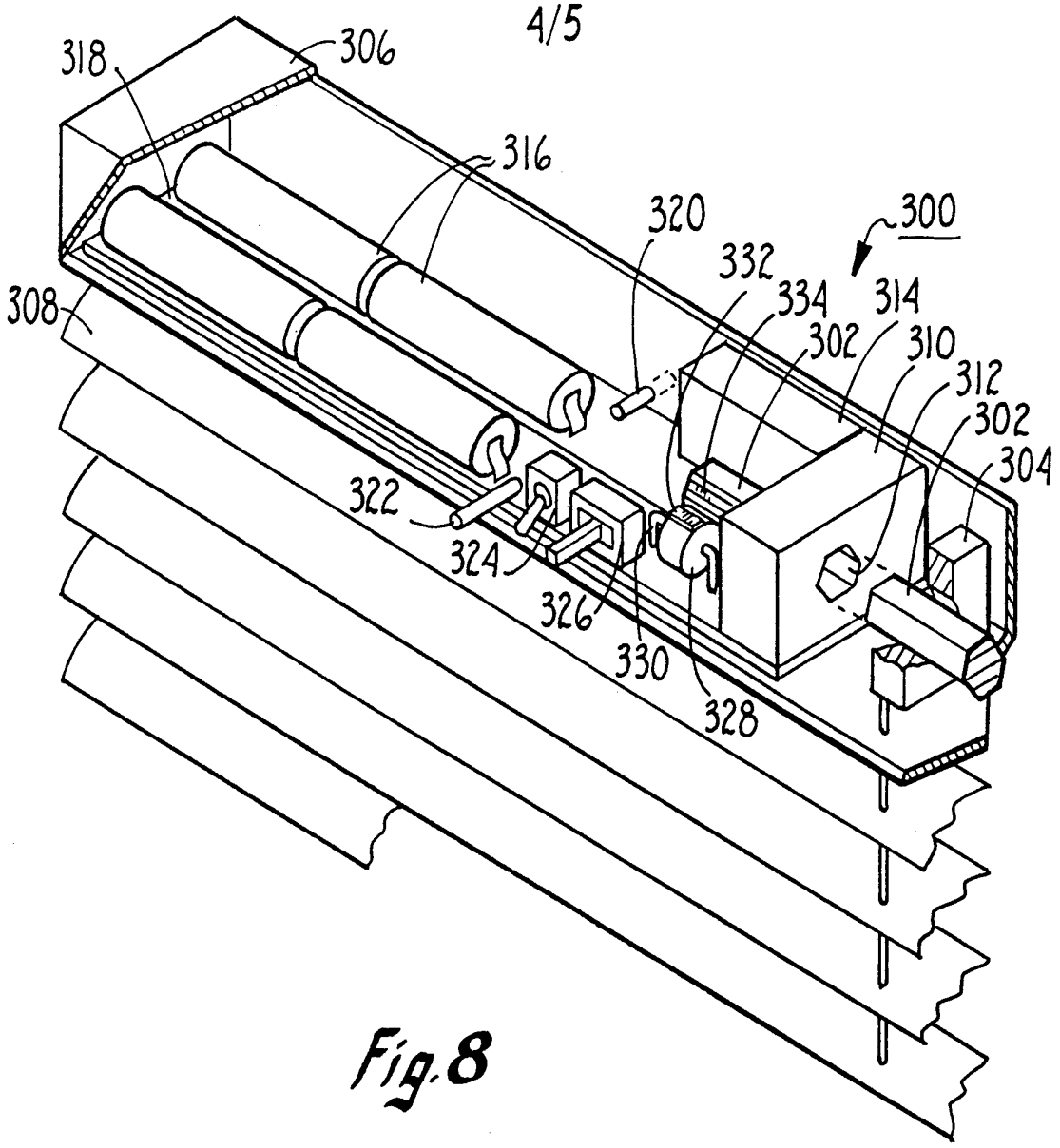
318
306
316
320
300
332
334
314
308
302
310
312
302
304
322
324
326
330
328

Fig. 8

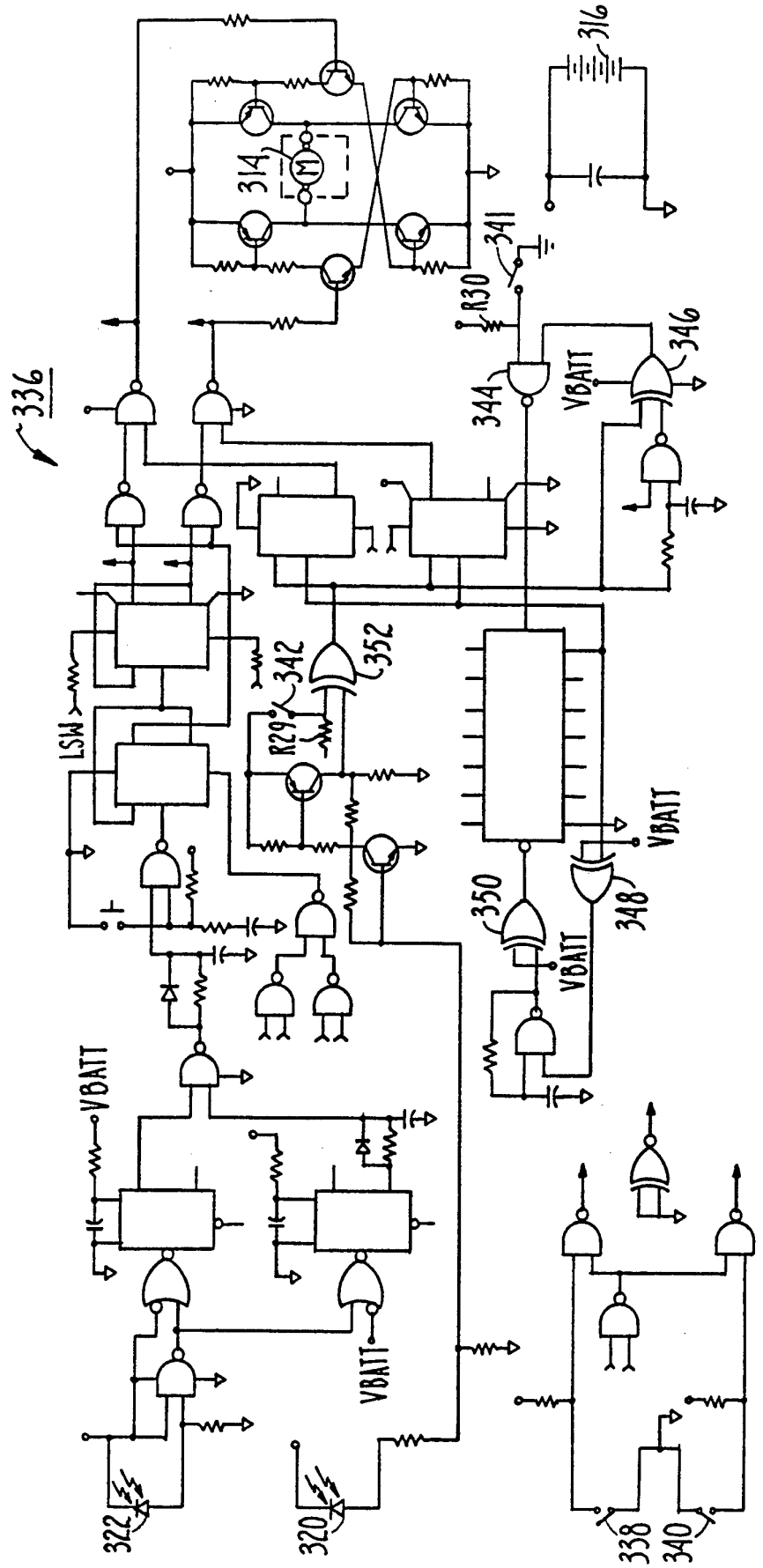
336
314
M1
316
341
R30
344
346
VBATT
342
352
R29
LSW
350
348
VBATT
VBATT
VBATT
322
320
338
340

Fig. 9

INTERNATIONAL SEARCH REPORT

International application No.
PCT/US94/06252

A. CLASSIFICATION OF SUBJECT MATTER

IPC(5) :HO2K 23/00; HO2P 1/18, 3/08,5/06,7/06
US CL :318/254,16,469,17,14
According to International Patent Classification (IPC) or to both national classification and IPC

B. FIELDS SEARCHED

Minimum documentation searched (classification system followed by classification symbols)

U.S. : 318/254,16,469,17,14

Documentation searched other than minimum documentation to the extent that such documents are included in the fields searched

Electronic data base consulted during the international search (name of data base and, where practicable, search terms used)

C. DOCUMENTS CONSIDERED TO BE RELEVANT

Category*	Citation of document, with indication, where appropriate, of the relevant passages	Relevant to claim No.
X	US,A, 4,902,953 (Kraft et al) 20 February 1990, col 3 lines 59-68, col 3 lines 20-25 and col 1 lines 20-30	1-4,7-10
Y	US,A, 4,956,588 (Ming) 11 September 1990, col 1 lines 19-20	1-4,7-10
Y	US,A, 4,492,908 (Stockle et al) 08 January 1985, col 3 lines 35-45	1-4,7-10

☐ Further documents are listed in the continuation of Box C. ☐ See patent family annex.

* Special categories of cited documents:

"A" document defining the general state of the art which is not considered to be of particular relevance

"E" earlier document published on or after the international filing date

"L" document which may throw doubts on priority claim(s) or which is cited to establish the publication date of another citation or other special reason (as specified)

"O" document referring to an oral disclosure, use, exhibition or other means

"P" document published prior to the international filing date but later than the priority date claimed

"T" later document published after the international filing date or priority date and not in conflict with the application but cited to understand the principle or theory underlying the invention

"X" document of particular relevance; the claimed invention cannot be considered novel or cannot be considered to involve an inventive step when the document is taken alone

"Y" document of particular relevance; the claimed invention cannot be considered to involve an inventive step when the document is combined with one or more other such documents, such combination being obvious to a person skilled in the art

"&" document member of the same patent family

Date of the actual completion of the international search	Date of mailing of the international search report
19 AUGUST 1994	SEP 19 1994
Name and mailing address of the ISA/US Commissioner of Patents and Trademarks Box PCT Washington, D.C. 20231 Facsimile No. (703) 305-3230	Authorized officer MASIH, KAREN Telephone No. (703) 308-3108

Form PCT/ISA/210 (second sheet)(July 1992)*