Dec. 23, 1952 R. GILMONT 2,622,765

MICROBURET OR PIPET

Filed Sept. 14, 1948

Fig. 1.

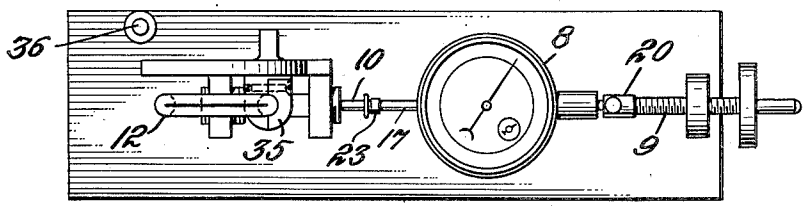

Fig. 3.

Fig. 2.

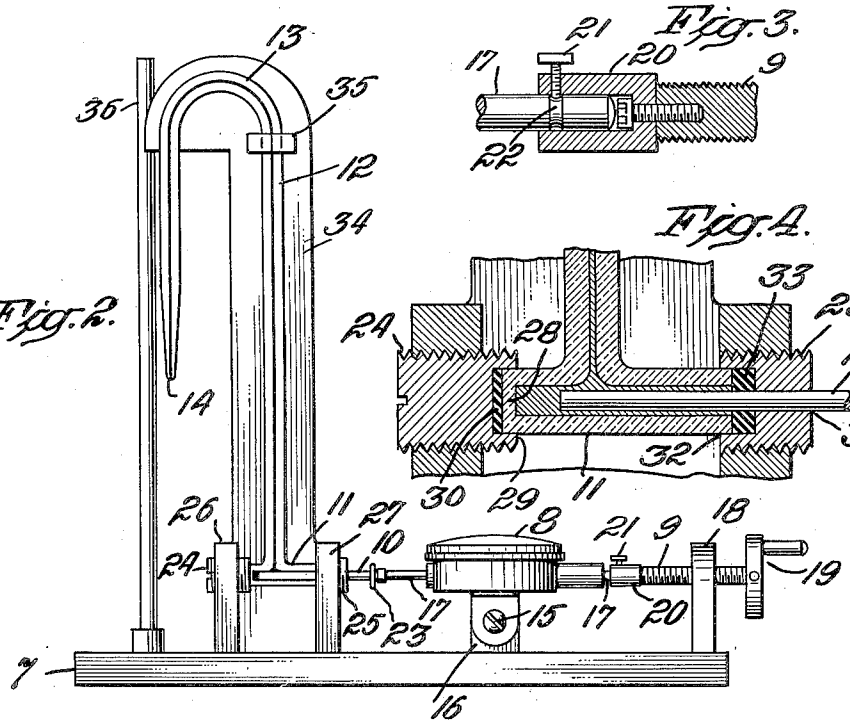

Fig. 4.

Fig. 5.

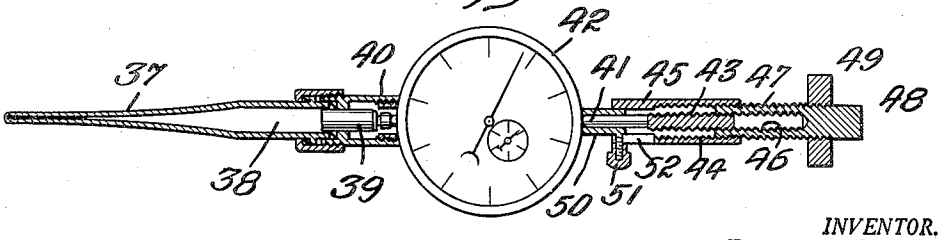

INVENTOR.
ROGER GILMONT

BY

Philip S. McKean

Patented Dec. 23, 1952

2,622,765

UNITED STATES PATENT OFFICE

2,622,765

MICROBURET OR PIPET

Roger Gilmont, Brooklyn, N. Y., assignor to The Emil Greiner Company, New York, N. Y., a corporation of New York

Application September 14, 1948, Serial No. 49,187

2 Claims. (Cl. 222—46)

1

The invention herein disclosed relates to burets and pipets of the capillary type.

It is known that the difficulty in handling these devices increases with the use of capillary tubing since the effect of surface tension becomes increasingly evident as the size of the capillary decreases, leading to drainage errors which vitiate the accuracy of measurement.

Objects of the present invention are to effect the elimination of drainage errors and to provide an extremely accurate and sensitive microburet or pipet of simple, inexpensive structure which can be easily adjusted and quickly and easily read as the adjustments are made.

Important objects of the invention also are to provide a structure of the character indicated which will be adapted and suited to the many and various titration problems involved in analytical chemistry, both liquids and gases.

Other desirable objects attained by the invention and the novel features of construction through which such objects are attained are set forth or will appear in the course of the following specification.

The drawing accompanying and forming part of the specification illustrates present practical commercial embodiments of the invention. Structure, however, may be modified and changed as regards such illustrations, all within the true intent and broad scope of the invention as hereinafter defined and claimed.

Fig. 1 in the drawing is a top plan view of one of the new microburets;

Fig. 2 is a front elevation of the same;

Fig. 3 is an enlarged broken sectional detail of the rotatable and separable connection between the fine adjusting screw and the spindle of the microgauge;

Fig. 4 is an enlarged broken sectional detail of the mercury reservoir structure and piston at the base of the capillary tube;

Fig. 5 is a plan view of a micropipet instrument with portions shown in cross section.

In Figs. 1 and 2 the microburet is shown as made up of a base 7 on which there is mounted a direct reading microdial gauge 8 adjusted by a fine screw 9 and in turn connected to actuate a piston 10 operating in an aligned, transversely disposed mercury reservoir 11 at the base of a capillary tube 12, looped at the top at 13 in gooseneck formation and terminating in a downwardly directed, fine orifice 14.

The gauge is suitably calibrated, as to read directly in .0001 cc. divisions and is shown mounted by screw 15 on an upstanding boss or

2

stud 16 on the base in horizontal position with its spindle 17 exposed at one end to the adjusting screw and at the opposite end to the piston rod or element 10.

The fine screw 9 is shown as operating in a screw post 18 on the base and as having a knob or operating crank 19 at outer end and a coupling 20 at the inner end, the latter carrying a thumb screw 21 engaging in an annular groove 22 in the gauge spindle to provide a rotatable and separable connection between the adjusting screw and spindle.

The gauge spindle is shown as having a direct positive screw connection 23 with the end of the piston element 10.

The transversely disposed mercury reservoir at the lower end of the capillary tube is shown as utilized for mounting this tubing by gripping it between opposed screw plugs or bushings 24, 25, engaged in spaced studs or posts 26, 27, rising from the base.

The closed end 28 of the reservoir or piston chamber is shown in Fig. 4 as setting in a socket 29 in the end of screw plug 24, backed up by a cushioning disc or washer 30.

The opposed companion screw plug 25 is shown in Fig. 4 as having a bore 31 to freely pass the piston element and a socket 32 to accommodate the open end of the reservoir chamber and the packing washer 33.

Adjustment of the screw plugs 24 and 25 clamps the capillary tube in proper relation on the stand 34 with the packing washer 33 properly sealing the piston where it passes into the reservoir chamber.

The upper portion of the capillary tubing is shown as supported and held to the stand structure by a clamp 35.

By the means described the cooperating parts of the instrument are properly aligned but removably supported on the base.

Additionally, the base may carry one or more upstanding rods or posts such as indicated at 36 for carrying test tube clamps or clamps for stirring devices or the like which might be used in titration operations.

Minute adjustments of the fine screw will show clearly on the direct reading micrometer gauge, and these adjustments will be mechanically transmitted to the mercury piston through the medium of the gauge spindle, the mercury operating as a liquid piston to deliver the titration liquid previously charged in the capillary tubing ahead of the mercury.

The rod 10 forming the piston is of the same

cylindrical dimensions throughout its active extent so that equal movements of the same will create equal volume displacements and these are directly and immediately readable on the dial of the gauge.

The instrument, therefore, is both sensitive and accurate with possibilities of error practically eliminated.

The invention may be embodied in micropipet form as illustrated in Fig. 5, which shows a pipet tube **37** having a mercury chamber **38** at the end of the same receiving a cylindrical piston **39** connected at **40** with the spindle **41** of the microgauge **42**.

A micrometer screw adjustment effect is obtained in this instance through the differential action of different pitched screws **43**, **44**, on the spindle and on a surrounding sleeve **45**, respectively, these two different screw elements being engaged by corresponding pitch internal and external screw threads **46**, **47**, on a micrometer sleeve **48** having a finger knob or disc **49** for turning the same.

The screw sleeve **45** is slidingly mounted on the tubular guide **50** for the gauge spindle but is held against rotation thereon by a pin **51** projecting from the bushing through a slot **52** in the sleeve so that with rotation of the screw the spindle will be advanced one way or the other an amount equivalent to the difference in pitch between the two sets of screw threads **43** and **44**.

While particularly designed for micro or ultramicro operations, it will be appreciated that the invention may be used for macro work as well, in all cases providing a high degree of accuracy and quick, easy readability in a simple, low cost, structural form. The invention is equally well suited to gases and liquids and in any volume. If the liquid which is to be handled reacts with mercury then the liquid alone may be used, without mercury.

What is claimed is:

1. A microburet or micropipet comprising tubing having a small discharge orifice at one end and a displacement chamber of larger dimensions at the opposite end, a piston rod of uniform dimensions mounted to operate in the end of said displacement chamber, a direct reading gage having an operating spindle, means securing said gage with one end of said operating spindle in alignment and engagement with the outer end of said piston rod and an adjustment screw in alignment and connected with the opposite end of said spindle and whereby fine adjustments of said screw will actuate the spindle of said microgage and said spindle at the same time will transmit displacement adjustments to said piston rod.

2. A microburet or micropipet comprising a base having horizontally spaced, upright supports, screw plugs mounted in horizontally opposed relation in said supports, said screw plugs having horizontally opposed sockets in the inner ends of the same, a length of tubing having its opposite ends seated in and removably held in the sockets of said screw plugs, a capillary tube in communication with and extending upwardly from the intermediate portion of said tubing, said tubing being of larger diameter than said capillary tube to constitute a reservoir for mercury or titration fluid, said capillary tube having a gooseneck at the upper end of the same terminating in a downwardly directed capillary discharge orifice, one of said screw plugs having an opening through the end of the same in line with said tubing, a piston rod of uniform dimensions extending through said opening into the tubing, packing in the seat in said plug at the end of the tubing engaged in said seat and surrounding said piston rod, a direct reading microgage having a plunger for operating the same, means supporting said microgage on said base with one end of said plunger in alignment and engagement with the outer end of said piston rod and whereby said piston rod will be actuated by said microgage plunger, and an adjustment screw mounted on the base in alignment and engagement with the other end of said microgage plunger and whereby fine adjustments of said screw imparted to the plunger of the microgage will be transmitted by the plunger to said piston rod to effect displacement of contents of said reservoir tubing in respect to the capillary tube connected therewith.

ROGER GILMONT.

REFERENCES CITED

The following references are of record in the file of this patent:

UNITED STATES PATENTS

Number	Name	Date
215,300	Sherman	May 13, 1879
635,154	Smreker	Oct. 17, 1899
2,158,774	Grubelic	May 16, 1939
2,412,295	Shaffer	Dec. 10, 1946
2,464,714	Peterson	Mar. 15, 1949