3 Sheets—Sheet 1.

G. A. STANLEY.

Lard-Cooler.

No. 228,691. Patented June 8, 1880.

Fig. 1.

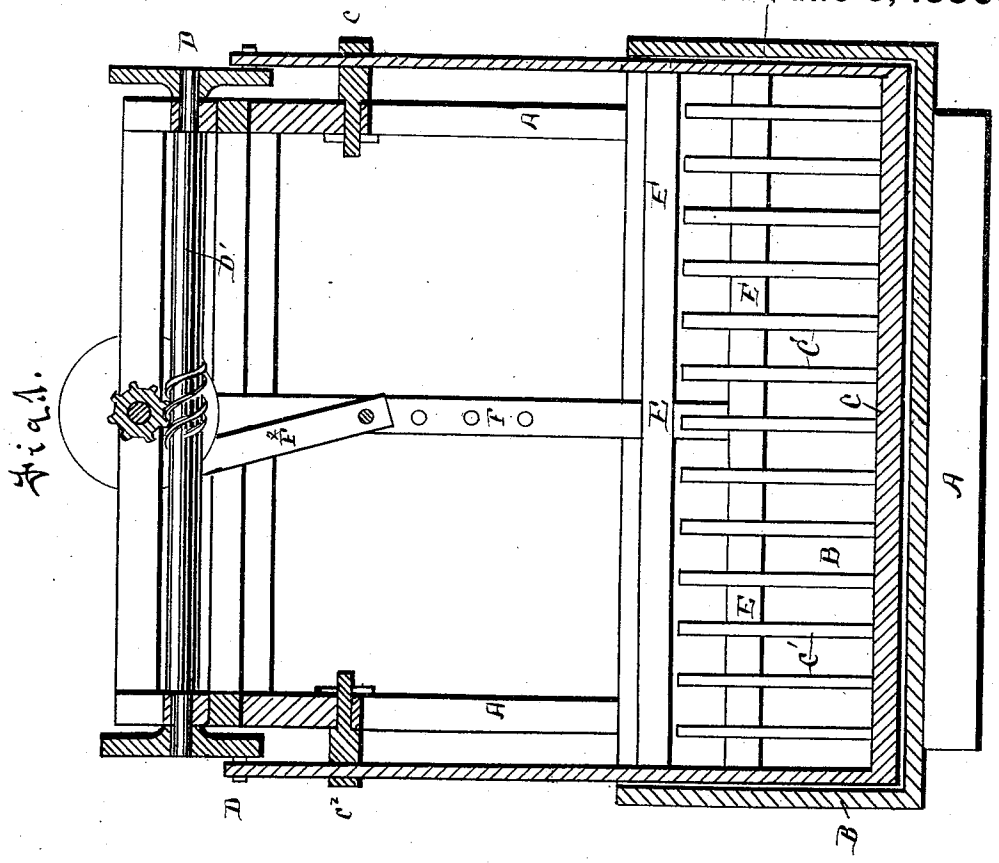

Fig. 2.

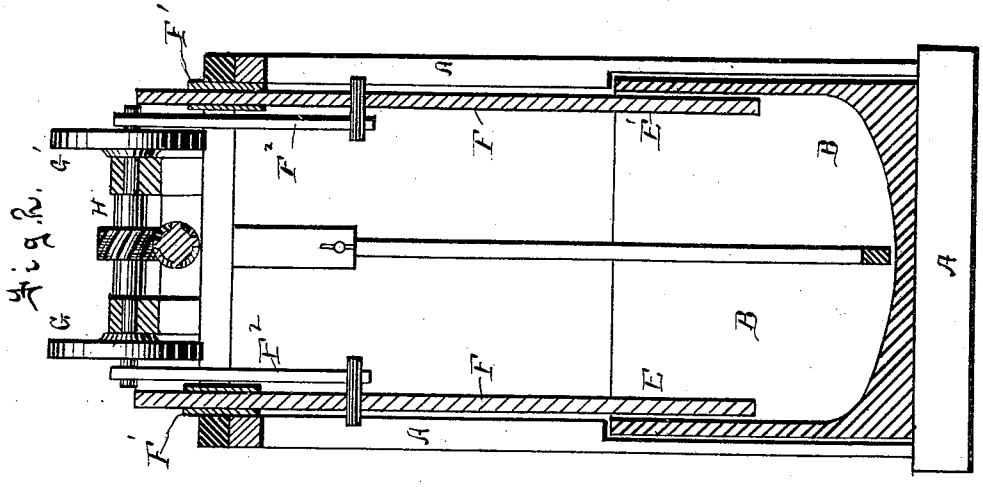

WITNESSES

Frank M. Tabor

Willard Fracker.

INVENTOR

Geo. A. Stanley.

By Sargent & Sargent

ATTORNEY

N. PETERS, PHOTO-LITHOGRAPHER, WASHINGTON, D. C.

3 Sheets—Sheet 2

G. A. STANLEY.

Lard-Cooler.

No. 228,691. Patented June 8, 1880.

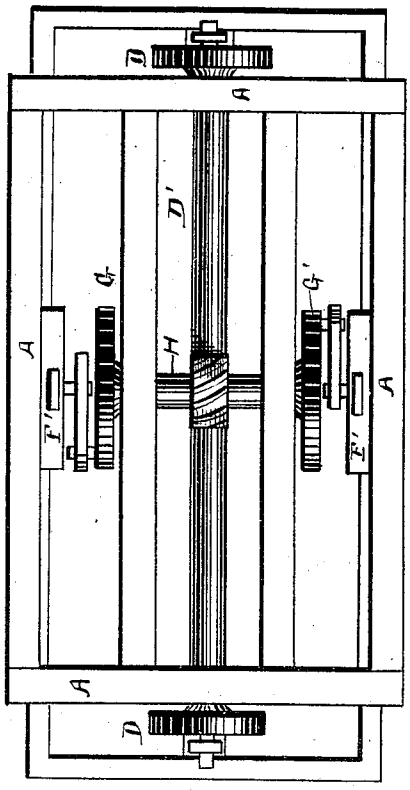

Fig. 3.

WITNESSES

Frank M. Faber.

Willard Fracker.

INVENTOR

Geo A. Stanley

By Seggett & Seggett

ATTORNEY

N. PETERS, PHOTO-LITHOGRAPHER, WASHINGTON, D. C.

3 Sheets—Sheet 3

G. A. STANLEY.

Lard-Cooler.

No. 228,691. Patented June 8, 1880.

Fig. 4

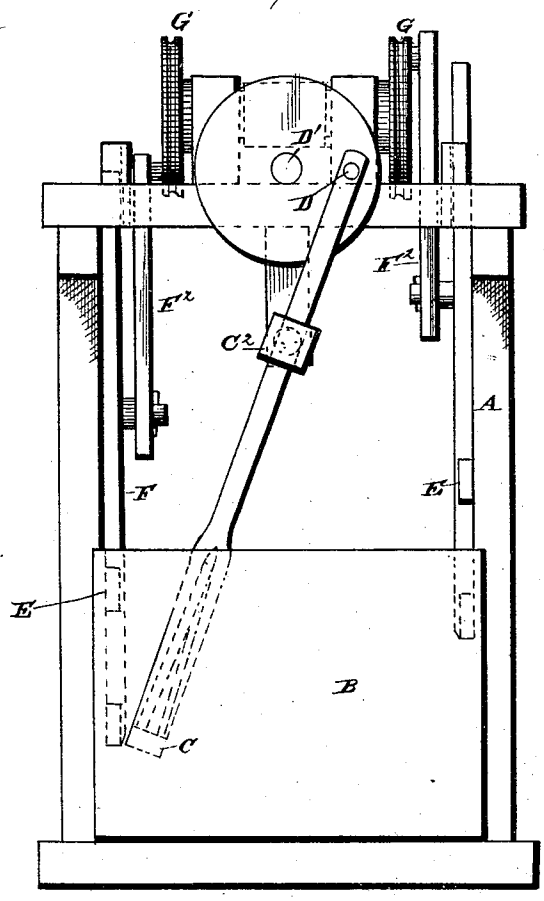

WITNESSES

A. M. Bright.

Ed. L. Nottingham

INVENTOR

Geo. A. Stanley.

By Legget & Legget.

ATTORNEY

N. PETERS, PHOTO-LITHOGRAPHER, WASHINGTON, D. C.

UNITED STATES PATENT OFFICE.

GEORGE A. STANLEY, OF CLEVELAND, OHIO.

LARD-COOLER.

SPECIFICATION forming part of Letters Patent No. 228,691, dated June 8, 1880.

Application filed December 22, 1879.

To all whom it may concern:

Be it known that I, GEORGE A. STANLEY, of Cleveland, in the county of Cuyahoga and State of Ohio, have invented certain new and useful Improvements in Lard-Coolers; and I do hereby declare the following to be a full, clear, and exact description of the invention, such as will enable others skilled in the art to which it pertains to make and use it, reference being had to the accompanying drawings, which form part of this specification.

My invention relates to lard-coolers, and is intended for use in cooling lards and other fats; and it consists in the parts and combination of parts, as hereinafter specified and claimed.

In the drawings, Figure 1 is a view in vertical longitudinal section of my device. Fig. 2 is a view in transverse section of said device. Fig. 3 is a plan view of said device. Fig. 4 is a view in end elevation of the device.

In the said drawings, A is a frame, of any suitable construction, dimension, and material, for holding and accommodating the parts and mechanism of my device. B is a tank or container, of metal, for holding lard while cooling. Within the cooling-tank operates a stirrer, consisting of a combined stirrer and scraping frame, C, and teeth or stirrer C′, extending upward from the horizontal portion of the frame C, as indicated in the drawings.

The upright arms of the stirrer are passed through guides C^2, suitably attached to the frame A, and are connected to cranks, wrist-pins, or their equivalents D D. These cranks are attached to and rotated by a common shaft, D′, suitably journaled to the frame A.

It will be seen that a revolution of the cranks D through the upright arms of the stirrer C will impart to the teeth C′ (and the portion of stirrer-frame to which they are attached) a motion through the lard within the tank B. This motion will not only serve all necessary purposes in stirring and thoroughly mixing the lard, but will also prevent any liability to splashing.

The bottom of the tank B is formed in the fashion of an ellipse corresponding to the motion of the stirrer C. This stirrer C is made of such a size as that its lower portions shall lie in a sufficiently-close juxtaposition to sides and bottom of the tank B that they shall operate not only as stirrers, but as a scraper, to remove from the inside surfaces of the tank B the lard as it is cooled.

As regards the construction of the tank B, I prefer making it double-walled and adapted to contain water between said walls. By this means cool water can be constantly supplied within the space between the tank-walls, and the cooling of the lard be thus greatly facilitated.

I do not narrowly limit myself to this method of keeping the tank cool, as any other convenient form of the many well-known methods may be resorted to, as found most expedient.

E E′ are scrapers, constructed to have a motion in the direction of the sides of the tank B, to which they are applied. In the device shown in the drawings this motion is a vertical one. The function of the scrapers E E′ is to clean the inside surfaces of the tank B that are not scraped by the stirrer C. Vertical motion is imparted to these scrapers through their stems F. These stems are passed through suitable guides F′ in the frame A, and pitmen F^2 connect these stems with wrist-pins, cranks, or their equivalents G G′, which are fixed upon and revolved by a common shaft, H.

The shafts D′ and H, it will be observed, cross each other at the middle upper portion of the machine. These shafts may either be given motions from independent gear-connections with a suitable motor or they may be connected by gearing in such a way as that motive power applied to one shaft will revolve the other.

I do not represent in the drawings or herein describe any means for gearing the two rotary shafts together, inasmuch as the same constitutes no part of my invention; and my improvements may be applied to lard-coolers whose shafts are geared together and adapted to be independently operated.

It will be observed that the cranks G G′ are set opposite to each other, so that when one is at its upward stroke the other will be at its downward stroke. These motions should be made to coincide with the movements of the stirrer C in such a manner that either scraper E or E′ should be lifted out of the way as the stirrer C approaches it. This, however, does not constitute an essential feature of my invention.

By the use of my device all portions of the

lard are thoroughly acted upon, whether in the center or about the margin of the tank; and by the peculiar motion given to the scraper and stirrer C a portion of the contents of the tank is taken from contact with the bottom and distributed through the mass and other portions by the downward motion of the same scraper and stirrer, and carried from at or near the top to the bottom of the tank. This operation being constantly repeated thoroughly mixes the mass and tends to cool it rapidly, while at the same time there is no tendency to splatter, and the surface of the mass is hardly disturbed.

I prefer to construct the stirrer and scraper C sufficiently broad to present a bearing-surface against the mass, and thereby, when in operation, forcing a portion of the same mass to the bottom of the tank and hinging toward the surface another portion at each operation.

What I claim is—

In a lard-cooler, the combination, with a combined scraper and stirrer adapted to have a joint vertical and lateral movement within the cooling-tank, and mechanism which actuates the same, of supplemental scrapers adapted to have vertical reciprocation at the sides of the tank, and mechanism which actuates them, substantially as set forth.

In testimony whereof I have signed my name to this specification in the presence of two subscribing witnesses.

GEORGE A. STANLEY.

Witnesses:

JNO. CROWELL, Jr.,

WILLARD FRACKER.