July 7, 1953 A. A. MARKOWITZ 2,644,212

MAGNETIC HOLDER FOR PENCILS

Filed March 5, 1951 2 Sheets-Sheet 1

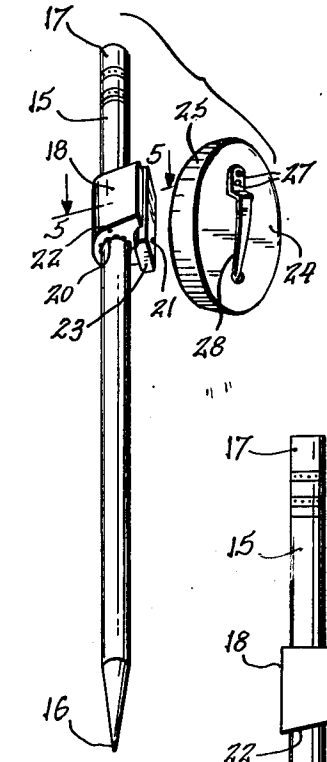


Fig. 1.

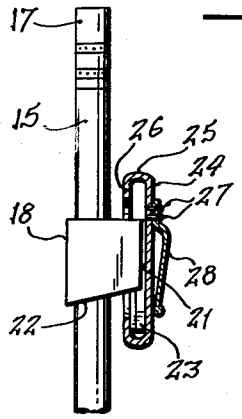


Fig. 2.

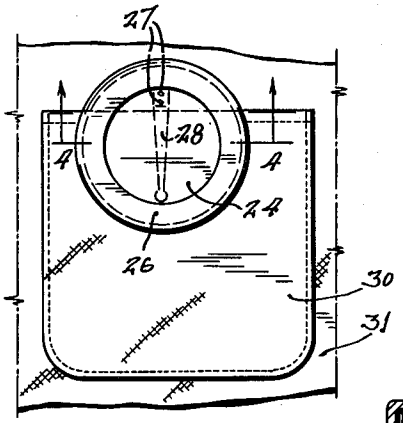


Fig. 3.

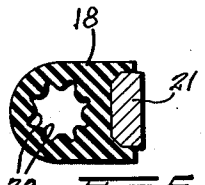


Fig. 5.

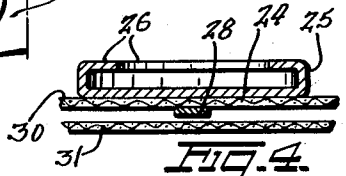


Fig. 4.

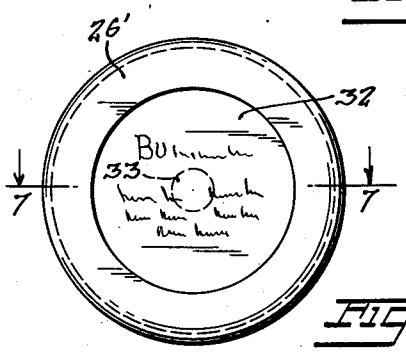


Fig. 6.

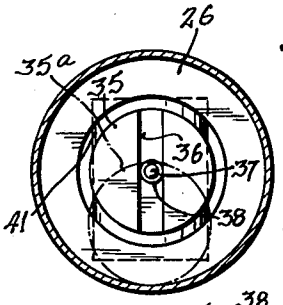


Fig. 10.

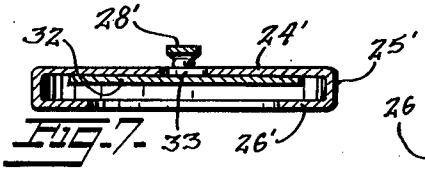


Fig. 7.

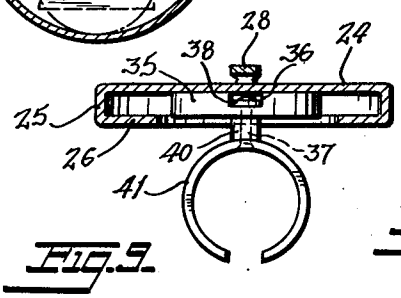


Fig. 9.

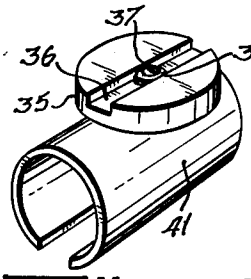


Fig. 11.

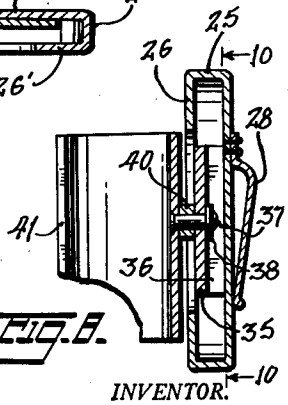


Fig. 8.

INVENTOR.
ALBERT A. MARKOWITZ
BY
ATTORNEY

July 7, 1953 A. A. MARKOWITZ 2,644,212

MAGNETIC HOLDER FOR PENCILS

Filed March 5, 1951 2 Sheets-Sheet 2

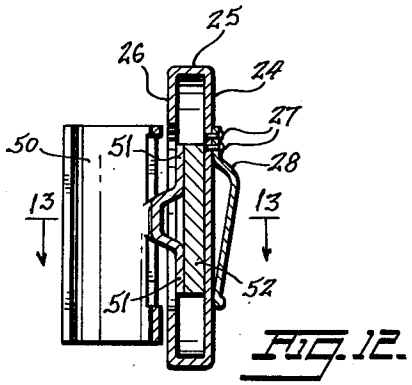


Fig. 12.

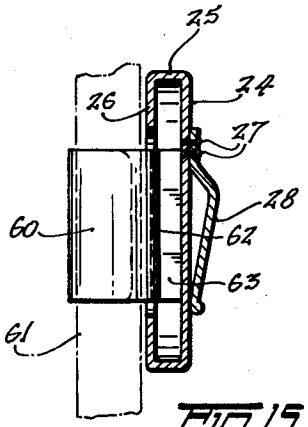


Fig. 15.

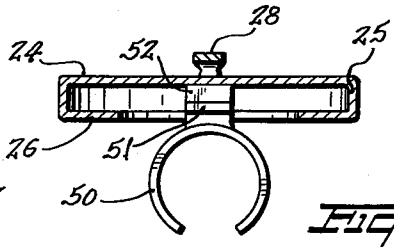


Fig. 13.

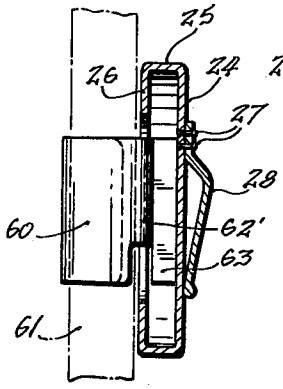


Fig. 17.

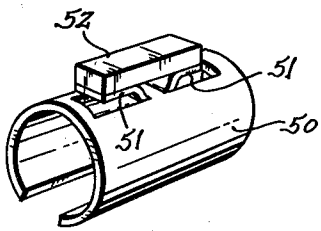


Fig. 14.

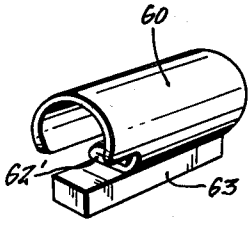


Fig. 18.

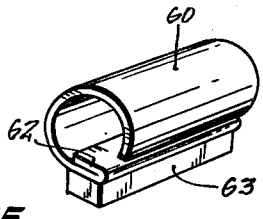


Fig. 16.

INVENTOR.
ALBERT A. MARKOWITZ
BY
ATTORNEY

Patented July 7, 1953 2,644,212

# UNITED STATES PATENT OFFICE

2,644,212

## MAGNETIC HOLDER FOR PENCILS

Albert A. Markowitz, Bronx, N. Y.

Application March 5, 1951, Serial No. 213,904

7 Claims. (Cl. 24—201)

1

This invention relates to new and useful improvements in magnetic holders or attachments for pencils and other articles, and, more particularly, to improvements on and additions to the magnetic pencil holder disclosed in my co-pending application filed on August 22, 1950, Serial Number 180,733.

In said co-pending application there is disclosed a sleeve-like housing for embracing a pencil and girthwisely gripping the same, said housing being elongated in the direction of length of said pencil and carrying a bar magnet.

One object of the invention is the provision of means clippable on an inside coat pocket or the like and to which the pencil can be secured by the attractive force of said magnet, it thus being possible to secure the pencil in place on the person merely by bringing the magnet into contact with said means.

Another object of the invention is to construct said means in such manner, and to modify said holder in such manner, as to provide for a further engagement between the magnet and said means in the event of slippage due to jostling or the like.

Still another object of the invention is to provide an improved pencil holder and magnet arrangement.

For further comprehension of the invention, and of the objects and advantages thereof, reference will be had to the following description and accompanying drawings, and to the appended claims in which the various novel features of the invention are more particularly set forth.

In the accompanying drawings forming a material part of this disclosure:

Fig. 1 is an exploded perspective view of the pencil holder constructed in accordance with the present invention.

Fig. 2 is a side elevational view of the pencil and holder with the pocket clipping means in section to illustrate the coaction of the parts.

Fig. 3 is a face view of the pocket clipping means as attached to a coat pocket or the like.

Fig. 4 is an enlarged sectional view on line 4—4 of Fig. 3.

Fig. 5 is an enlarged sectional view on line 5—5 of Fig. 1, but with the pencil removed.

Fig. 6 is a face view of a modified form of pocket clipping means.

Fig. 7 is a sectional view on line 7—7 of Fig. 6.

Fig. 8 is a vertical sectional view of the pencil holding means constructed in accordance with another modification of the present invention.

Fig. 9 is a horizontal sectional view taken on

2

the line 9—9 of Fig. 8, but with the pencil engaging clip shown in full lines.

Fig. 10 is a vertical sectional view taken on the line 10—10 of Fig. 8.

Fig. 11 is a perspective view of the pencil engaging clip, per se, used in the form of the invention shown in Figs. 8 to 10.

Fig. 12 is a view similar to Fig. 8, but illustrating the pencil holding means constructed in accordance with still another modification of the present invention.

Fig. 13 is a horizontal sectional view taken on the line 13—13 of Fig. 12, but with the pencil engaging clip shown in full lines.

Fig. 14 is a perspective view of the pencil engaging clip, per se, used in the form of the invention shown in Figs. 12 and 13.

Fig. 15 is a side elevational view partly in vertical section of the pencil holding means constructed in accordance with a further modification of the present invention.

Fig. 16 is a perspective view of the pencil engaging clip, per se, used in the form of the invention shown in Fig. 15.

Fig. 17 is a view similar to Fig. 15, but illustrating the pencil holding means constructed in accordance with still another modification of the present invention.

Fig. 18 is a perspective view of the pencil engaging clip, per se, used in the form of the invention shown in Fig. 17.

The pencil holding means, according to the first form of the present invention shown in Figs. 1 to 5, is illustrated applied to a pencil 15 having a writing point 16 and the usual eraser 17. The pencil is embraced by a pencil engaging clip having a housing 18 which consists of a sleeve-like structure of rubber or the like having the bore thereof provided with corrugations 20. As shown, one face of housing 18 is flattened and has imbedded therein a permanent bar magnet 21. According to the invention the magnet 21 extends longitudinally beyond one end 22 of the housing 18 which is cut back angularly, as shown most clearly in Fig. 2. Thus, the projecting end of the magnet forms a sort of finger 23 whose purpose will be described hereinafter.

There also is provided a pocket engaging clip having a disc 24 of magnetizable material having a laterally projecting peripheral flange 25 from which an annular lip 26 projects inwardly. Secured to the uniplanar face of disc 24 by a pair of rivets 27 is a spring pocket clip 28 of familiar design and by which the disc may be secured to the lip of a pocket 30 secured to the outer side of

a garment 31; such as a coat, dress, pair of overalls or the like.

The construction is such that the disc 24 is secured in place on the pocket 30 as shown in Fig. 3 in which position the same is ideally located for engagement of the magnet 21 therewith. By placing the magnet against the flanged face of the disc, the pencil 15 is securely held in place. Further, if, due to jostling or the like, the pencil 15 and the magnet 21 should slip downward, the finger 23 of the latter engages behind the lip 26 and effects an even firmer holding in place of the pencil, see Fig. 2.

Referring now to Figs. 6 and 7, there is disclosed a modified form of the invention. In these figures like parts are given the same reference numerals as hereinbefore but with a prime added. As shown, the disc 24' is made somewhat larger but is provided with the flange 25', the lip 26' and the pocket clip 28' the same as hereinbefore. Mounted within the flange 25' is a disc 32 of paper or cardboard or the like containing suitable advertising matter. In order to facilitate removal of a disc 32 for replacement thereof, a centered opening 33 is provided in the disc 24'. By inserting a pencil or the like into said opening the disc 32 is readily removed.

Referring now to Figs. 8–11, there is disclosed a modified pencil holding means for use with a pocket clip disc 24. A horseshoe magnet 35 is made in the form of a disc having a diametral groove or trough 36 in one face thereof. A centrally disposed hole in groove 36 serves to accommodate a rivet 37 which also passes through a washer 38 in the groove a sleeve 40 which abuts the uniplanar face of the magnet, and the central portion of a breached, ring-like clip member 41 of any suitable springy material. In obvious fashion, clip member 41 may be utilized to secure a pencil or the like to the magnet 35.

The pencil engaging clip just described, is illustrated as used with a pocket clip disc 24 such as that shown in Figs. 3 and 4, but it is appreciated that this modified clip could also be used with the pocket clip shown in Figs. 6 and 7. As illustrated, the diameter of magnet 35 is smaller than that of the opening surrounded by lip 26, so that the former is readily brought against the disc 24 for magnetic attachment thereto. As shown in dot and dash lines $35^a$ in Fig. 10, the magnet 35 becomes firmly lodged behind the lip 26 if downward slippage thereof occurs. Thus, the possibility of dropping or losing a pencil gripped by the clip member 41 is greatly reduced.

The modification of the invention shown in Figs. 12 to 14 is characterized by another form of pencil engaging clip which is shown in use with a pocket engaging clip similar to that described in connection with Figs. 1 to 5. Here again, it is appreciated that the pencil engaging clip of modified form can also be used with the pocket engaging clip shown in Figs. 6 and 7.

The modified form of pencil engaging clip is characterized by a breached, ring-like clip member 50 formed of springy metallic material for frictionally maintaining itself in a desired position along the length of the pencil upon which it is engaged. Cut from the material of the clip member 50 there is a pair of oppositely disposed end aligned tongues 51 which are bent to have their inner faces spaced from the outer periphery of the clip member 50 a distance just slightly greater than the thickness of the annular lip 26 of the pocket engaging clip, for a purpose which will become clear as the description proceeds.

Secured to the outer faces of the tongues 51, there is a bar magnet 52. The magnet 52 can be secured to the tongues 51 by a suitable mucilage or by welding, brazing or in any other similar manner. Such attachment of the magnet 52 to the tongues 51 leaves one face of the magnet free to be attracted to the exposed face of the disc 24 of the pocket engaging clip for releasably attaching the pencil carried by the clip member 50 to that pocket engaging clip.

With the bar magnet 52 attracted to the exposed face of the disc 24, as shown in Figs. 12 and 13, the spacing of the inner faces of the tongues 51 from the outer periphery of the clip member 50 will permit the lowermost tongue 51 and the adjacent end of the bar magnet to engage behind the lip 26 of the pocket engaging clip in the event any downward slippage of the bar magnet should occur with relation to the exposed face of the disc 24.

In the modified form of the invention shown in Figs. 15 and 16 still another form of pencil engaging clip is illustrated in use with a pocket engaging clip similar to that shown in Figs. 1 to 5.

The further modification of the pencil engaging clip is characterized by a breached, ring-like clip member 60 formed of springy material for frictionally maintaining itself in a desired position along the length of the pencil upon which it is engaged. The position of the pencil in the clip member 60 is illustrated by the dot and dash lines 61 in Fig. 15.

Along one longitudinal edge of the breached side of the clip member 60, the material thereof is doubled back upon itself forming a double layer mounting portion 62 which is flat throughout its length and width.

Attached to the double layer mounting portion 62, there is a magnet 63 of the bar-type. Attachment of the magnet 63 to the mounting portion 62 is accomplished by gluing, welding or in any similar manner which leaves the opposite face of the magnet free to be attracted to the exposed face of the disc 24 of the pocket engaging clip for releasably attaching the pencil carried by the clip member 60 to that pocket engaging clip.

The modification of the invention shown in Figs. 17 and 18 is similar to that described in connection with Figs. 15 and 16, differing only in that one end of the double layer mounting portion 62' is cut away exposing one end portion of the magnet 63. The construction is such, as is clearly apparent from Fig. 17, that with the magnet 63 attracted to the exposed face of the disc 24 of the pocket engaging clip, that exposed end of the magnet will become engaged behind the lip 26 of the pocket engaging clip in the event of any downward slippage of the bar magnet should occur with relation to the exposed face of the disc. Thus, complete separation of the magnet 63 from the disc is prevented by such downward slippage.

In other respects the form of the invention shown in Figs. 17 and 18 is similar to that illustrated in Figs. 15 and 16 and the like reference numerals are used to identify like parts in all of the views.

While the modified forms of pencil engaging clips of Figs. 15 and 16 and Figs. 17 and 18 are illustrated in use with the pocket engaging clip shown in Figs. 1 to 5, it is appreciated that those pencil engaging clips can also be used with the modified form of the pocket engaging clip shown in Figs. 6 and 7.

It is to be understood that if the magnets **21**, **35**, **52** or **63** should become de-magnetized or if these members are made of a non-magnetic substance, the annular lip **26** or **26'** will prevent the respective pencil holding clips from falling off the disc **24**.

While I have illustrated and described the preferred embodiments of my invention, it is to be understood that I do not limit myself to the precise constructions herein disclosed and the right is reserved to all changes and modifications coming within the scope of the invention as defined in the appended claims.

Having thus described my invention, what I claim as new, and desire to secure by United States Letters Patent is:

1. Means for securing a pencil or the like on the person, which includes a flexible sleeve-like housing removably secured on the pencil and having a flat longitudinal face, a bar magnet imbedded in said flat face and extending beyond one end thereof to form a finger, the edge of the housing adjacent said finger being angularly undercut toward the finger, a disc of magnetizable material, a laterally directed peripheral flange surrounding the other face of the disc, and an inwardly directed annular lip extending from said flange, said finger having a thickness less than the lateral extent of said flange.

2. Means for securing a pencil or the like on the person, which includes a flexible sleeve-like housing removably secured on the pencil and having a flat longitudinal face, a bar magnet imbedded in said flat face and extending beyond one end thereof to form a finger, the edge of the housing adjacent said finger being angularly undercut toward the finger, a disc of magnetizable material, a laterally directed peripheral flange surrounding the other face of the disc, and an inwardly directed annular lip extending from said flange, said finger having a thickness less than the lateral extent of said flange, said



magnet being secured to the said other face of said disc by contact therewith, and said finger becoming lodged behind said lip in the event of slippage of the magnet across the face of the disc.

3. Means for securing a tool to the person comprising an apertured housing to receive the tool, a magnet embedded in said housing having one end extending therefrom and a clip holding disc of magnetizable material, said disc including an annular flange on the periphery thereof, said flange having an annular lip spaced from said disc, said disc and lip forming a pocket, the magnet being received in said pocket, whereby the flange and lip prevent accidental separation of said magnet and disc in the event of slippage.

4. The combination of claim 3 wherein said apertured housing includes a corrugated tool gripping means.

5. The combination of claim 4, wherein said housing is of non-magnetic material.

6. The combination of claim 5 wherein said housing is of compressible material.

7. The combination of claim 3 wherein said annular flange is of a diameter large enough to receive a portion of said housing.

ALBERT A. MARKOWITZ.

**References Cited** in the file of this patent

UNITED STATES PATENTS

| Number | Name | Date |
|---|---|---|
| D. 149,897 | McFayden | June 8, 1948 |
| 312,296 | Scott | Feb. 17, 1885 |
| 313,762 | Pattee | Mar. 10, 1885 |
| 545,641 | Wilson | Sept. 3, 1895 |
| 1,174,887 | Meriwether | Mar. 7, 1916 |
| 2,297,806 | Smith | Oct. 6, 1942 |
| 2,397,931 | Ellis | Apr. 6, 1946 |

FOREIGN PATENTS

| Number | Country | Date |
|---|---|---|
| 382,576 | Great Britain | Oct. 27, 1932 |