(12) INTERNATIONAL APPLICATION PUBLISHED UNDER THE PATENT COOPERATION TREATY (PCT)

(19) World Intellectual Property Organization
International Bureau

(43) International Publication Date
2 November 2006 (02.11.2006)

PCT

(10) International Publication Number
WO 2006/115503 A1

(51) International Patent Classification:
B32B 7/14 (2006.01) *E04B 1/78* (2006.01)
B32B 5/26 (2006.01) *F16L 59/02* (2006.01)
E04B 1/76 (2006.01) *D04H 13/00* (2006.01)

(21) International Application Number:
PCT/US2005/018011

(22) International Filing Date: 24 May 2005 (24.05.2005)

(25) Filing Language: English

(26) Publication Language: English

(30) Priority Data:
11/110,365 20 April 2005 (20.04.2005) US

(71) Applicant *(for all designated States except US)*: **OWENS CORNING** [US/US]; One Owens Corning Parkway, Toledo, OH 43659 (US).

(72) Inventor; and
(75) Inventor/Applicant *(for US only)*: **SHAFFER, Roy, E.** [US/US]; 115 Philipps Glen Drive, Granville, OH 43023 (US).

(74) Agents: **GASAWAY, Maria, C.** et al.; Owens Corning Science & Technology Center, 2790 Colombus Road, Bldg. 11-7, Granville, OH 43023-1200 (US).

(81) Designated States *(unless otherwise indicated, for every kind of national protection available)*: AE, AG, AL, AM, AT, AU, AZ, BA, BB, BG, BR, BW, BY, BZ, CA, CH, CN, CO, CR, CU, CZ, DE, DK, DM, DZ, EC, EE, EG, ES, FI, GB, GD, GE, GH, GM, HR, HU, ID, IL, IN, IS, JP, KE, KG, KM, KP, KR, KZ, LC, LK, LR, LS, LT, LU, LV, MA, MD, MG, MK, MN, MW, MX, MZ, NA, NG, NI, NO, NZ, OM, PG, PH, PL, PT, RO, RU, SC, SD, SE, SG, SK, SL, SM, SY, TJ, TM, TN, TR, TT, TZ, UA, UG, US, UZ, VC, VN, YU, ZA, ZM, ZW.

(84) Designated States *(unless otherwise indicated, for every kind of regional protection available)*: ARIPO (BW, GH, GM, KE, LS, MW, MZ, NA, SD, SL, SZ, TZ, UG, ZM, ZW), Eurasian (AM, AZ, BY, KG, KZ, MD, RU, TJ, TM), European (AT, BE, BG, CH, CY, CZ, DE, DK, EE, ES, FI, FR, GB, GR, HU, IE, IS, IT, LT, LU, MC, NL, PL, PT, RO, SE, SI, SK, TR), OAPI (BF, BJ, CF, CG, CI, CM, GA, GN, GQ, GW, ML, MR, NE, SN, TD, TG).

Published:
— *with international search report*

For two-letter codes and other abbreviations, refer to the "Guidance Notes on Codes and Abbreviations" appearing at the beginning of each regular issue of the PCT Gazette.

WO 2006/115503 A1

(54) Title: FACED FIBROUS INSULATION

(57) Abstract: A faced fibrous insulation (10) having a facing (12) on one or more surfaces of a fibrous insulation material is provided. The facing provides improved surface quality, high and controlled adhesion, and is easily manufactured. The facing of the present invention includes a pre-applied adhesive (22, 24) that is heat activated to provide adhesion to the fibrous insulation. The facing may be input into the glass fiber forming section of a fibrous insulation production line. Alternatively, the facing may be applied to the uncured pack (64) prior to curing or applied to the cured fibrous insulation. As another alternative, a vapor barrier layer (14) may be attached on a surface of the insulation opposite the facing.

FACED FIBROUS INSULATION

TECHNICAL FIELD AND INDUSTRIAL APPLICABILITY OF THE INVENTION

The present invention relates to faced fibrous insulation. The faced insulation of the present invention provides improved thermal, acoustical properties as well as improved handling during installation of residential insulation. The faced insulation of the present invention also provides improved surface qualities for encapsulated insulation and improved facing adhesion qualities for during installation.

BACKGROUND OF THE INVENTION

Faced fibrous insulation is used in a variety of thermal, acoustical and residential applications. Conventional insulation typically include a facing layer adhered to a fibrous insulation layer. The facing layer is useful in preventing or at least limiting any air erosion damage, which may be caused by the flow of air directly across the insulation layer.

Encapsulated insulation is used to insulate building cavities, typically defined by framing members such as studs, joists or rafters in walls and attics. The insulation is typically low-density fibrous glass insulation. The encapsulated insulation may be held in place by stapling the lateral flanges to the framing members or by "friction-fit" or "press-fit" of oversized insulation between the framing members. One such encapsulated insulation is shown in U.S. Patent No. 5,277,955, which discloses the use of a heated polyethylene film applied directly to the fibrous glass insulation and discloses that non-woven materials, such as a layer can also be used.

Another patent showing encapsulated insulation is U.S. Patent No. 5,848,509 in which a non-woven covering is secured to the fibrous glass insulation using a hot melt adhesive applied to the facing or to the insulation just before the facing is applied.

U.S. Patent No. 5,981,037 discloses an insulation assembly that includes an elongated batt of fibrous insulation material having a facing secured on a major surface thereof by the use of a series of spaced apart adhesive ribbons.

Other faced insulation products are used in insulation for HVAC equipment, duct board and other industrial insulation. One example of a conventional faced fibrous insulation product is disclosed in U.S. Patent No. 6,444,289. U.S. Patent No. 6,444,289 discloses the use of non-porous aluminum foil, foil reinforced paper, foil scrim paper, or

polymeric material, which is adhered to the fibrous insulation by an adhesive. Perforations are formed in the facing layer after the facing layer and the insulation layer are joined and the adhesive bond is set or cured.

U.S. Patent Numbers 5,783,268 and 6,270,865 disclose that faced fibrous insulation used in duct board provides an airflow surface with increased airflow and less turbulence. The faced fibrous insulation also provides a smooth surface that reduces the accumulation of dirt and dust. In addition, U.S. Patent Numbers 5,783,268 and 6,270,865 disclose the use of a central layer of compressed fiberglass one or one and one half inches thick with a polyester/glass facing having a density of about 0.01 pounds per square foot, a minimum tensile strength of 7 pounds/inch in the machine direction, and 5 pounds/inch in the cross-machine direction. The fibrous insulation is formed by the industry standard rotary fiber process, as developed by Owens Corning, in which molten glass is spun into fibers by a perforated spinner and blown by high temperature gas to elongate the individual fibers. The fibers are then sprayed with a phenol-formaldehyde binder to form an uncured pack of glass fibers. The facing is then applied to the pack of glass fibers so that the facing is adhered to the fiberglass solely by the uncured binder in the pack when the pack and facing are cured.

The '268 and '865 patents also disclose the formation of shiplap edges at the outer edges of the duct board to assist in the fabrication of a fiberglass duct. However, this method tends to result in poor adhesion of the mat facing to the fibrous insulation due to the inherent difficulty in controlling the amount of binder at the surface. The method also tends to increase manufacturing costs because the process of curing the fibrous insulation must be optimized to provide a suitable bond between the mat facing and the glass fibers rather than optimizing for improved efficiency in curing the binder in the pack of fibers.

In addition to the method disclosed in the '268 and '865 patents, it is known in the art to manufacture faced insulation by spraying a binder directly onto the facing prior to application of the facing to an uncured pack of fibers and subsequently curing the binder in the pack and on the facing. For example, U.S. Patent No. 5,041,178 discloses spraying a binder onto the interface where the facing meets the upper and lower surfaces of the uncured pack. This method tends to saturate the fibers on the surface of the finished board that causes a brashy surface on the fibrous insulation due to the fiber ends that are fixed in place by the high amount of binder at the surface. The high amount of binder on the mat

also may cause discoloration of the mat facing causing a spotty or mottled surface on the fibrous insulation.

Faced fibrous insulation may also be formed by applying a polymer directly to the surface of a cured fiberglass pack. U.S. Patent No. 5,900,298 discloses the use of a row of spiral spray extrusion heads for directly extruding ethyl vinyl acetate (EVA) fibers onto the cured pack of fibers in an amount of 1.2 to 3.5 g/ft^2. U.S. Patent No. 5,487,412 discloses a duct board including an applied layer of an acrylic foam coating having a dry solids content of 10-20 g/ft^2 of the surface of the board. The coating also includes an inorganic biocide such as silver nitrate.

SUMMARY OF THE INVENTION

The present invention provides a facing on one or more surfaces of a fibrous insulation material. The facing provides improved surface quality, high and controlled adhesion, and is easily manufactured. The facing of the present invention includes a pre-applied adhesive that is heat activated. The facing may be input into the glass fiber forming section of a fibrous insulation production line. Alternatively, the facing may be applied to an uncured pack prior to curing or applied to cured fibrous insulation. The facing may be applied to one or more surfaces of the insulation and may be applied in conjunction with a standard vapor barrier facing such as a kraft asphalt facing. It is an object of the present invention to provide a facing on one or more surfaces of a fibrous insulation material to provide improved surface quality, high and controlled adhesion, and is easily processed. It is a further object of the present invention to provide a faced fibrous insulation that may be reliably manufactured through a wide variety of process parameters without adversely affecting the surface quality or the adhesion of the facing to the fibrous insulation.

BRIEF DESCRIPTION OF THE DRAWINGS

FIG. 1 is a perspective view, partially cut away, of a faced fibrous insulation of the present invention having a facing on a single side.

FIG. 2 is a perspective view, partially cut away, of a faced fibrous insulation of the present invention having a facing on opposing sides.

FIG. 3 is a cross-sectional view of a faced fibrous insulation detailing a according to the present invention having an adhesive applied thereto.

FIG. 3A is a detailed cross-sectional view from FIG. 3 showing the interaction of the glass fibers and the adhesive on the facer.

FIG. 3B is a detailed cross-sectional view similar to FIG. 3A showing the interaction of the glass fibers and fibrous adhesive on the facer.

FIG. 4 is a plan view of a manufacturing line for producing faced fibrous insulation according to the present invention wherein the facing is input into the glass fiber forming section and the uncured pack is deposited on the facing and showing that the faced fibrous insulation is rolled after curing.

FIG. 5 is a detailed plan view of a manufacturing line for producing faced fibrous insulation wherein the facing is applied to the upper and lower surfaces of the uncured pack after the pack exits the glass fiber forming section and showing that the double-faced fibrous insulation is bisected and rolled into two rolls after curing.

FIG. 6 is a detailed plan view of a manufacturing line for producing faced fibrous insulation wherein the facing is applied to the upper surface of the uncured pack after the pack exits the glass fiber forming section and showing that the faced fibrous insulation is crosscut to form panels, which are stacked.

FIG. 7A is a plan view of an alternative method of forming the faced fibrous insulation in a post-curing oven or off-line process using a heated platen to adhere the facing to the fibrous insulation.

FIG. 7B is a plan view of an alternative method of forming the faced fibrous insulation in a post-curing oven or off-line process using a heated roll to adhere the facing to the fibrous insulation.

FIG. 7A is a plan view of an alternative method of forming the faced fibrous insulation in a post-curing oven or off-line process using a heated caterpillar to adhere the facing to the fibrous insulation.

DETAILED DESCRIPTION AND PREFERRED EMBODIMENTS OF THE INVENTION

The facing of the present invention includes a pre-applied adhesive that is heat activated to provide adhesion to the fibrous insulation. The facing may be input into the glass fiber forming section of a fibrous insulation production line, or alternatively may be applied to the uncured pack prior to curing, or applied to the cured fibrous insulation or in yet another alternative may be applied in a post-curing oven or offline process. The

facing may be applied to one or more surfaces of the insulation. The facing may also be applied on a major surface of the insulation with a conventional facing, such as kraft/ asphalt, kraft/polymer or foil/scrim/kraft facing on another surface of the insulation.

The faced fibrous insulation product of the present invention includes at least one layer of fibrous insulation such as glass fibers, mineral wool, rock wool, or polymer fibers and at least one layer that is a facing. Faced insulation products according to the invention include products that have a single layer of fibrous insulation and a facing applied to one surface; a single layer of fibrous insulation and a facing applied to opposed major surfaces; a single layer of fibrous insulation, a facing applied to opposed major surfaces where at least one layer of the facing is wider than the major surfaces so that one or more minor surfaces of the fibrous insulation may be faced and a facing applied to one major surface of the insulation while a vapor barrier is applied to the opposite major surface.

In the embodiment shown in FIG. 1, the faced fibrous insulation 10 includes a layer of fibrous insulation 16, typically glass fibers, but optionally mineral wool, rock wool, or polymer fibers, and at least one layer that includes a facing 12. The facing 12 may be formed of any suitable fibrous insulation, such as, but not limited to, glass fibers, mineral wool, rock wool, or polymer or natural fibers. The fibers may be of any suitable length and diameter, which would be easily determined by one of skill in the art. Fiber length is highly dependent on processing and may range from less than 1 inch (2.5 cm) to more than 7 in. (17.5 cm). Fiber diameter is typically measured in hundred thousandths of an inch (HT)). The fibrous insulation 16 may have any suitable amount of binder. Binder content is expressed as a percent of the weight of the bound fibers after curing, in weight percent. The length and diameter of the fibers, as well as the amount of binder applied to the fibrous insulation 16, are dependent upon the final use of the product. For example, residential insulation may have a fiber diameter of between 20-35 HT and a binder content of between 3-15 %. Duct board is generally a more rigid product and may have a fiber diameter of between 12-22 HT and a binder content of between 2-10 %. Light density insulation may have a fiber diameter of between 20-35 HT and a binder content of between 3-15 %. The uncured fibrous insulation used in these products is cured at a time and temperature sufficient to cure the binder. The cure time is determined by the amount of binder in the product, product thickness, and product density and is controlled by the length of the oven and the speed at which the production line is run but can range from less than 1 minute to more than 5 minutes. The temperature of the curing oven is

controlled to evaporate water used in the binder, cure the binder, and control any chemical reaction, which may produce undesirable reaction products.

FIG. 2 shows an alternative embodiment in which the faced fibrous insulation 10 includes a facer 12 on one major surface and a facer or vapor barrier 14 on a second major surface. In a related embodiment, it is possible to apply facer 12 to one surface of the fibrous insulation 16 where the facer 12 is wider than the fibrous insulation 16 and drapes over the edges to face one or more minor surface of the fibrous insulation 16.

FIG. 3 shows a cross-sectional view of the faced fibrous insulation 10 detailing the facer 12 having an adhesive applied thereto. Facer 12 includes a fibrous web 20, typically of organic fibers such as rayon, polyethylene, polypropylene, nylon, polyester or blends thereof, which may be processed by known methods to include any suitable binder such as an acrylic, any suitable flame-retardants such as halogens, antimony oxide or borates, and/or any suitable pigment such as carbon black or organic dies. One preferred method of forming the web 20 is by a conventional dry laid process with a flood and extract application of an acrylic emulsion binder. Other suitable binders include latex, and styrene-butadiene rubber. While the web is preferably a dry-laid non-woven web, other materials such as point bonded, woven and other non-woven materials such as needled, spunbonded or meltblown webs may be used.

The non-woven web 20 may be formed of any suitable fibers such as polyethylene, polypropylene, polyesters, rayon, nylon, and blends of such fibers. The fibers may be staple fibers or continuous filaments. In addition, the fibers may be bicomponent to facilitate bonding. For example, a fiber having a sheath and core of different polymers such a polyethylene (PE) and polypropylene (PP) may be used or mixtures of PE and PP fibers may be used. The non-woven web 20 may optionally be treated with any suitable fungicide. Fungicides are well known in the non-woven field. One particularly suitable fungicide is diiodomethyl-p-tolysulfone, which is available from Angus Chemical Company of Buffalo Grove, New York, USA under the trade name AMICAL FLOWABLE. However, other suitable fungicides identified by one of skill in the art may be used. The non-woven web 20 may be treated with a fungicide either during manufacture or in a post manufacture process.

Particles of an adhesive 22 are distributed on a surface of the non-woven web 20 and heated to a temperature above the melting point of the adhesive 22 to adhere the adhesive powder 22 to the non-woven web 20, as shown in FIG. 3A. Suitable adhesives

22 include thermoplastic adhesives such as polyethylene, polypropylene, ethylene vinyl acetate and other polymer adhesives. Suitable thermoset adhesives 22 include polyamide adhesives, epoxies, urethane, melamine, phenolic powders such as phenol formaldehyde, urea formaldehyde and thermoset adhesives are suitable for use.

Fibrous particles of an adhesive 24 may also be distributed on a surface of the non-woven web 20 and heated to a temperature above the melting point of the adhesive fibers 24 to adhere the adhesive fiber 24 to the non-woven web 20, as shown in FIG. 3B. Suitable materials for the adhesive fibers 24 include thermoplastic adhesives such as polyethylene, polypropylene, ethylene vinyl acetate and other polymer adhesives. Suitable thermoset adhesives 24 include polyamide adhesives, epoxies, urethane, melamine, phenolic fibers such as phenol formaldehyde, urea formaldehyde and thermoset adhesives are suitable for use. For the purpose of this application the word particles or particulate is intended to include any particle shape including but not limited to spheres, granules, rods, fibers, flakes or any other shape and size which allows the adhesive to be heated sufficiently to activate the adhesive and bond the facer 12, 14 to the fibrous insulation 16.

The non-woven included acrylic binder, halogen antimony oxide fire retardant, carbon black, organic dies and diiodomethyl-p-tolysulfone. The web 20 may also include colored fibers, a dye or colored filler, such as carbon black to provide any desired color to the facer.

As shown in FIG. 4, a glass fiber manufacturing line including a fiber forming section 58, a curing oven 70 and a roll-up device 82. As shown in FIG. 4, the forming section 58 includes a number of fiberizing spinners 50 that are supplied with a molten glass stream (not shown). The fiberizing spinners 50 are rotated at high speeds and the molten glass is forced to pass through holes in the circumferential sidewall of the spinners 50 to form fibers. Blowers 52 direct a gas stream in a substantially downward direction to impinge the fibers, turning them downward, attenuating the primary fibers to form a veil 60. Binder sprayers 54 spray binder onto the veil 60 that is deposited onto facer 12 which is placed on collection chain 62 where the fibers in veil 60 are collected into uncured pack 64.

The uncured pack 64 and facer 12 exit the forming section 58 under exit roller 66 and enter the curing oven 70. The uncured pack 64 and facer 12 are compressed between the upper curing oven chain 72 and the lower curing oven chain 74. Heated air is forced from fan 76 through the lower chain 72, the pack 64 and upper chain 74to cure the binder

in pack 64 and to adhere the facer 12 to the pack to form the faced fibrous insulation 10. The heated air passes out of the curing oven 70 through exhaust section 78.

The faced fibrous insulation 10 then exits curing oven and is rolled by the roll-up device 82 for storage and shipment. The faced fibrous insulation 10 may subsequently be cut or die pressed to form fibrous insulation parts.

In a second embodiment depicted in FIG. 5, the uncured pack 64 exits the forming section and facer 12 is applied to one surface of uncured pack 64 from roll 90 and a facer or a vapor barrier 14 is applied to another surface of uncured pack 64. Suitable vapor barriers include, but are not limited to kraft/asphalt, kraft/polymer, polymer and foil/scrim/kraft layers. The facer layers 12, 14 and the uncured pack 64 then enter the curing oven 70. The uncured pack 64 and facer layers 12, 14 are compressed between the upper curing oven chain 72 and the lower curing oven chain 74 and heated air is forced through the chains 72, 74 and the pack 64 to cure the binder in pack 64 and to adhere the facer layers 12, 14 to the pack to form the faced fibrous insulation 10.

As the faced fibrous insulation 10 exits curing oven, it is bisected by bisect saw 80 and rolled into two rolls by lower roll-up 82 and upper roll-up 84 for storage and shipment. It is also contemplated that the bisected material may be rolled on a single roll-up to form a double layer single roll. It is also contemplated that the faced fibrous insulation will not be bisected and will be supplied as a double-faced insulation product as shown in FIG. 2. It is also contemplated that facer 14 may be supplied to the pack 64 in the forming section, as shown in FIG. 4. It is further contemplated that a double-faced product may be supplied in panels as shown in FIG. 6.

A further embodiment is shown in FIG. 6. It can be seen in FIG. 6 that once the uncured pack 64 exits the forming section, facer 12 is applied to one surface of uncured pack 64 from roll 90. The facer layer 12 and the uncured pack 64 then enter the curing oven 70. The uncured pack 64 and facer layer 12 are compressed between the upper curing oven chain 72 and the lower curing oven chain 74 and heated air is forced through the chains 72, 74 and the uncured pack 64 to cure the binder in pack 64 and to adhere the facer layer 12 to the pack to form the faced fibrous insulation 10.

The faced fibrous insulation 10 exits curing oven and is cut to length by blade 86 to form panels 88 of faced fibrous insulation which may then be stacked or bagged by packaging unit 92. It is also contemplated that panels 88 of faced fibrous insulation 10

will be supplied as a double-faced product as shown in FIG. 2. It is further contemplated that facer 14 may be supplied to the pack 64 in the forming section, as shown in FIG. 4.

FIG. 7A shows an alternative method of forming the faced fibrous insulation 10 in a post-curing oven or off-line process using a heated platen 100 to adhere the facing 12 from roll 90 to the fibrous insulation 16.

FIG. 7B is a plan view of an alternative method of forming the faced fibrous insulation 10 in a post-curing oven or off-line process using a heated roll 102 to adhere the facing 12 from roll 90 to the fibrous insulation 16.

FIG. 7C is a plan view of an alternative method of forming the faced fibrous insulation 10 in a post-curing oven or off-line process using a heated caterpillar 110 that has a heated upper belt 112, which rotates round first upper belt roller 114 and second upper belt roller 116 to compress fibrous insulation against heated lower belt 120, which rotates round first lower belt roller 122 and second lower belt roller 124 for a time sufficient to heat the adhesives 22, 24 to adhere the facing 12 to a first surface of fibrous insulation 16 and a vapor barrier 14 to a second surface of fibrous insulation product 16.

The faced fibrous insulation of the present invention includes at least one layer of fibrous insulation such as glass fibers, mineral wool, rock wool, or polymer fibers and at least one layer of a facer. One skilled in the art it will recognize that it is possible to manufacture a number of product configurations based on the teachings hereof, including a single layer of fibrous insulation with a single layer of facer applied to one surface, a single layer of fibrous insulation with facer applied to opposed major surfaces, a single layer of fibrous insulation with facer applied to opposed major surfaces wherein the at least one layer of the facer is wider than the major surfaces so that one or more minor surfaces of the fibrous insulation may be facer faced. It is also possible to apply multiple layers of fibrous insulation with facing there between with any one of the above-mentioned facings applied thereto. It is also possible to supply a vapor barrier material in place of at least one facing in the products described above.

The invention of this application has been described above both generically and with regard to specific embodiments. Although the invention has been set forth in what is believed to be the preferred embodiments, a wide variety of alternatives known to those of skill in the art can be selected within the generic disclosure. The invention is not otherwise limited, except for the recitation of the claims set forth below.

WHAT IS CLAIMED IS:

1. A faced fibrous insulation product (10), comprising:

a fibrous insulation layer (16) having first and second opposed major surfaces; and

a first facing (12) adhered to a first major surface of the fibrous insulation layer, the facing including a facing layer having a particulate adhesive sintered thereto having a point and, wherein the facing is adhered to the first major surface of the fibrous insulation layer by heating the facing and the fibrous insulation layer to a temperature above the melting point of said adhesive for a time sufficient to adhere the facing to the fibrous insulation layer.

2. The faced fibrous insulation product of claim 1, further comprising:

a thermally activated binder applied to the fibrous insulation layer, wherein said thermally activated binder is cured by the heat used to adhere the facing to the first major surface.

3. The faced fibrous insulation product of claim 1, wherein the particulate adhesive is selected from the group consisting of polyethylene, polypropylene, ethylene vinyl acetate, polyamide, epoxy, urea formaldehyde, melamine, urethane, phenolics and combinations thereof.

4. The mat faced fibrous insulation product of claim 1, wherein the particulate adhesive is a powdered adhesive (22).

5. The faced fibrous insulation product of claim 4, wherein the particulate adhesive is a fibrous adhesive (24).

6. The faced fibrous insulation product of claim 1, wherein the facing layer is formed of fibers selected from the group consisting of polyethylene, polypropylene, polyesters, rayon, nylon and blends thereof.

7. The faced fibrous insulation product of claim 6, wherein the facing layer is formed of a blend of polyester and rayon fibers.

8. The faced fibrous insulation product of claim 1, further comprising:

a second facing adhered to the second major surface of the fibrous insulation.

9. The faced fibrous insulation product of claim 1, wherein the fibrous insulation is glass fibers.

10. A method of making a faced fibrous insulation product comprising the steps of:

forming a pack of fibers (64) having thereon an uncured binder;

applying a facer (12) to a first surface of said pack of fibers, said facer including a facing layer, a particulate adhesive sintered to said facing layer; and

curing the pack of fibers to form a fibrous insulation product,

wherein the facer is adhered to the pack of fibers during said curing step.

11. The method of claim 10, further comprising the step of applying a second facer to a second surface of said pack of fibers prior to said curing step.

12. The method of claim 10, further comprising the step of applying a second facer to a second surface of said the faced fibrous insulation after said curing step.

13. The method of claim 10, further comprising the step of applying a vapor barrier (14) to a second surface of said faced fibrous insulation.

14. The method of claim 10, wherein the particulate adhesive is selected from the group consisting of polyethylene, polypropylene, ethylene vinyl acetate, polyamide, epoxy, urea formaldehyde, melamine, urethane, phenolics and combinations thereof.

15. The method of claim 10, wherein the particulate adhesive is a powdered adhesive.

16. The method of claim 10, wherein the particulate adhesive is a fibrous adhesive.

17. The method of claim 10, wherein the facing layer is formed of fibers selected from the group consisting of polyethylene, polypropylene, polyesters, rayon, nylon and blends thereof.

18. A method of making a faced fibrous insulation product comprising the steps of:

forming an uncured pack of glass fibers and uncured binder on said mat;

curing said pack by to form an insulation product; and

supplying facer having a facing layer and a particulate adhesive adhered to said facing layer to said insulation product; and

activating said particulate adhesive to adhere the facer to the insulation product.

19. The method of claim 18, further comprising the step of applying a second facer to the insulation product.

20. The method of claim 18, further comprising the step of applying a vapor barrier to a second surface of said faced fibrous insulation after said curing step.

21. The method of claim 18, further comprising the step of applying a vapor barrier to a second surface of said faced fibrous insulation.

FIG. 1

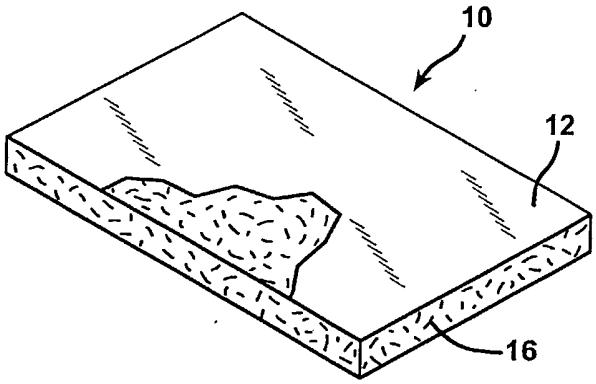

FIG. 2

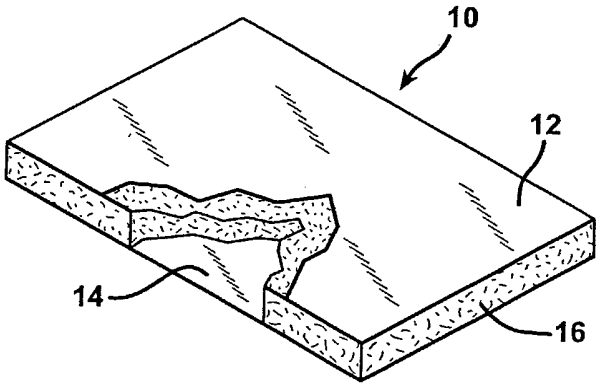

FIG. 3

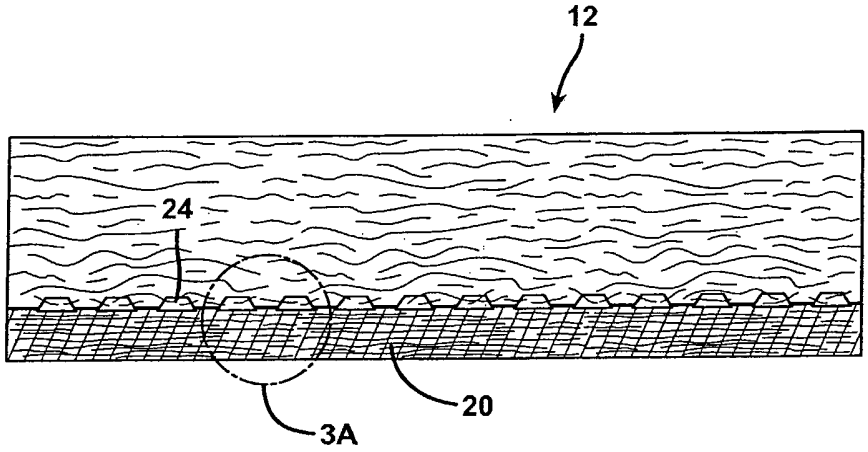

FIG. 3A

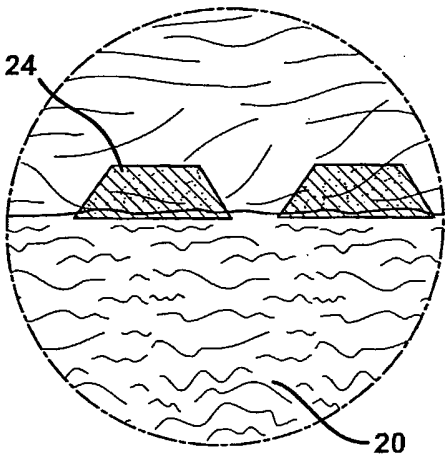

FIG. 3B

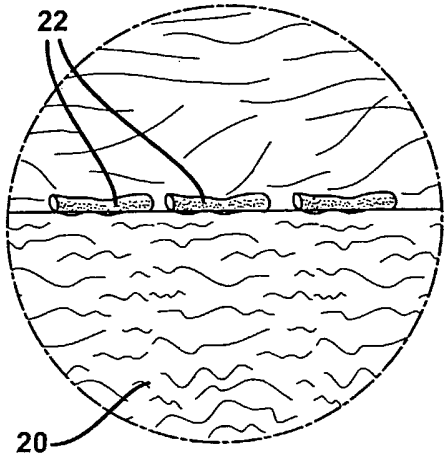

FIG. 4

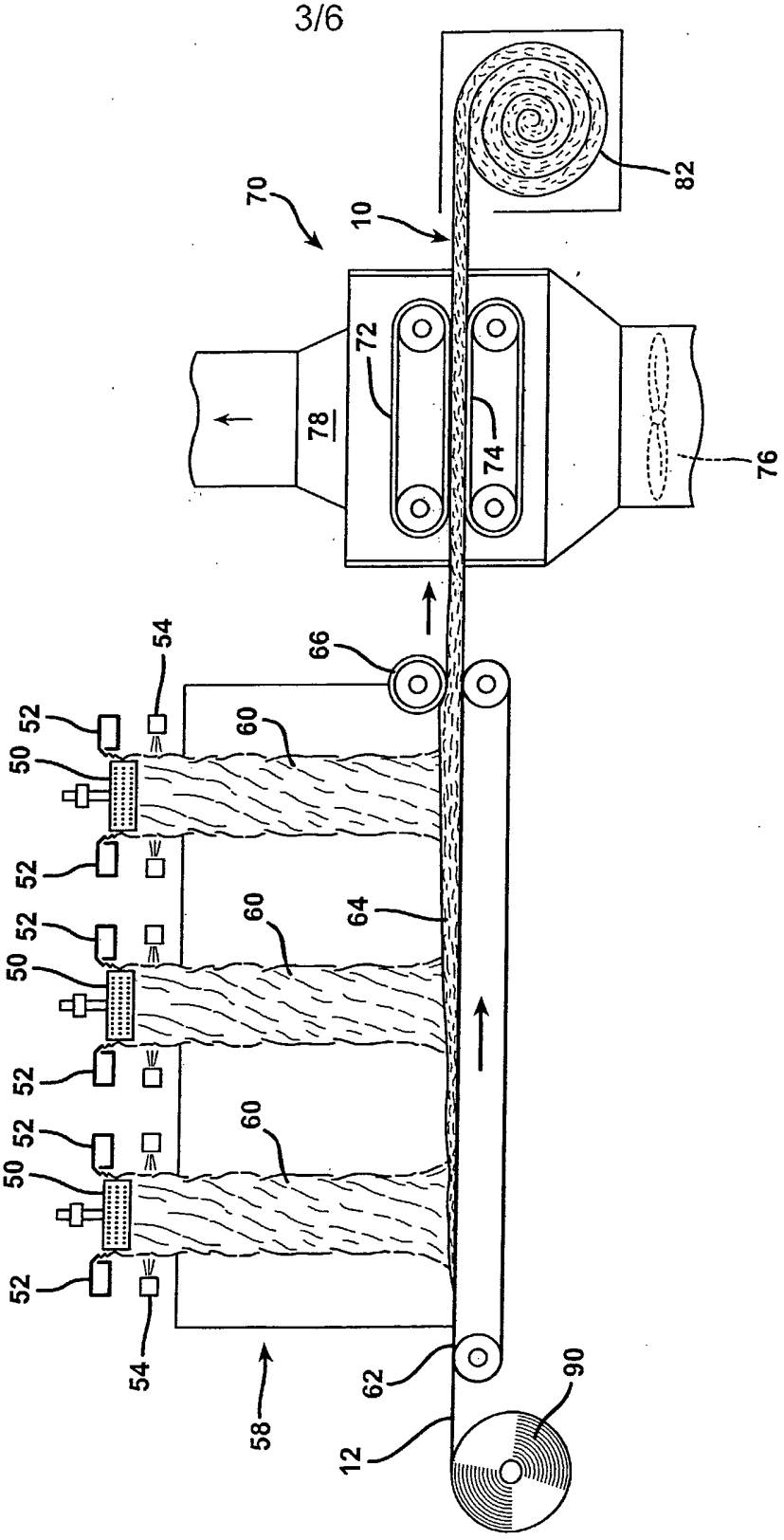

FIG. 5

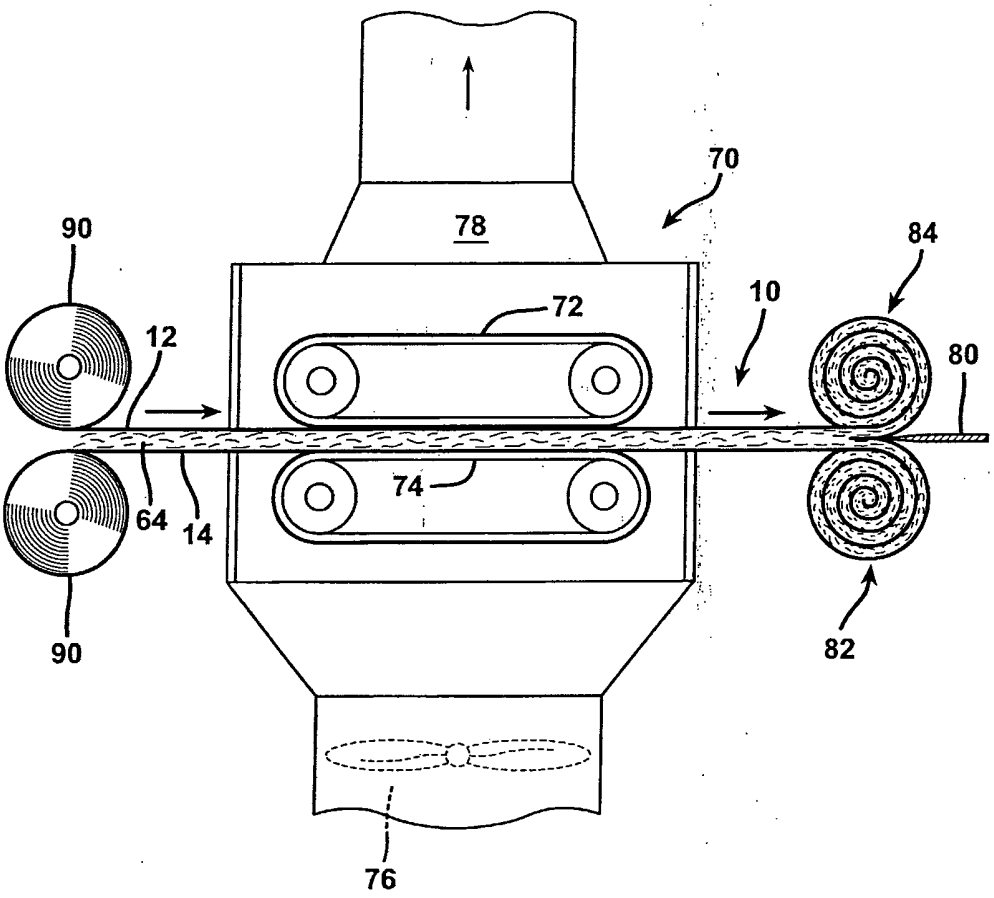

FIG. 6

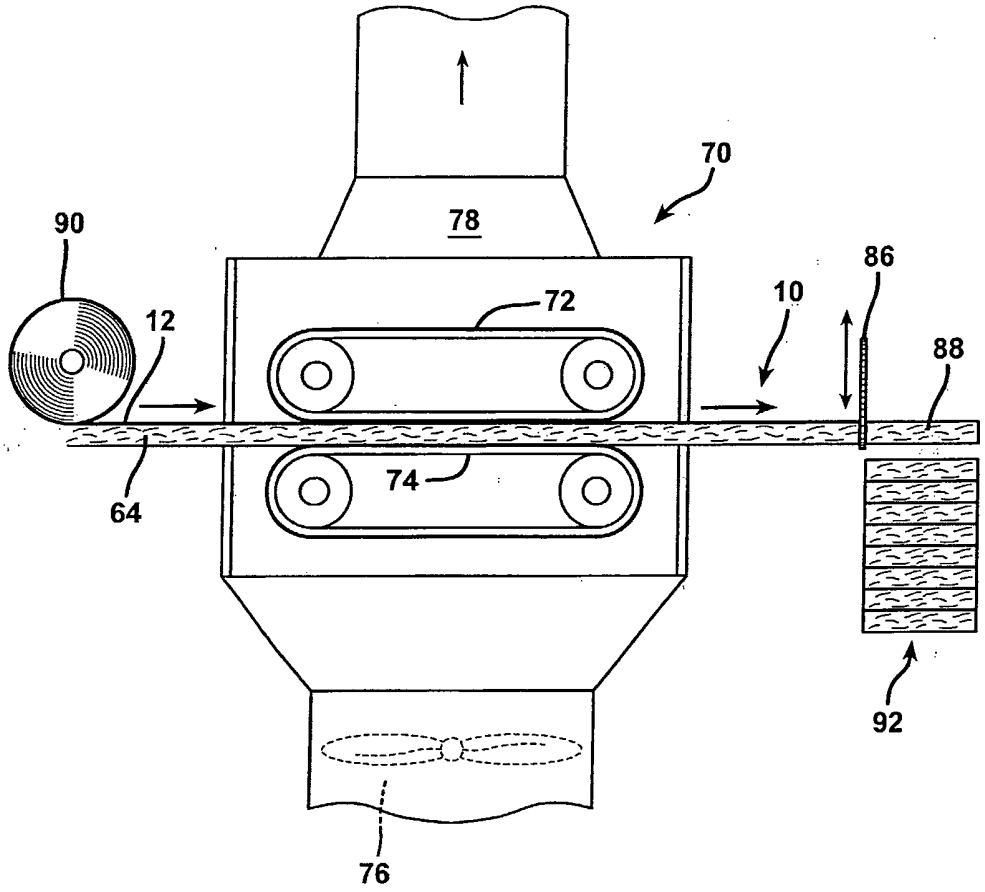

FIG. 7A

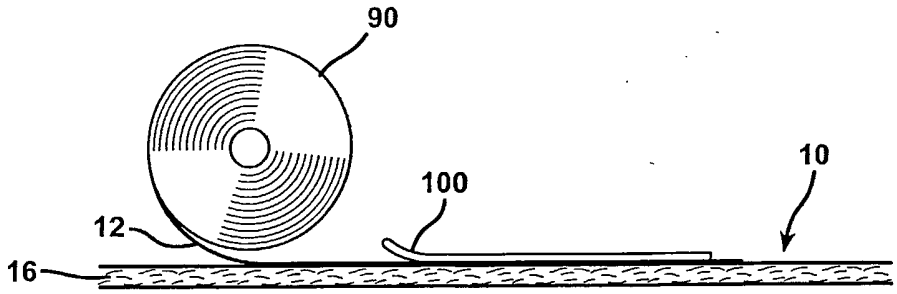

FIG. 7B

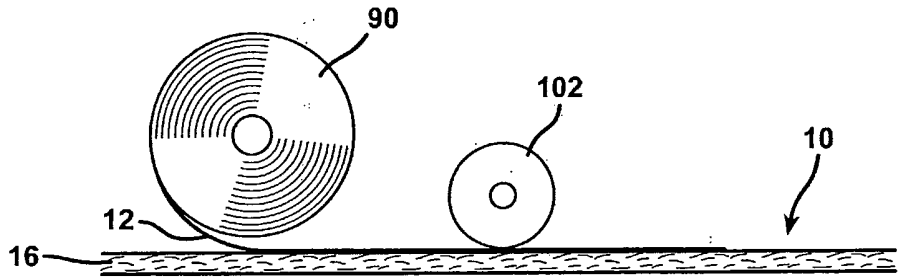

FIG. 7C

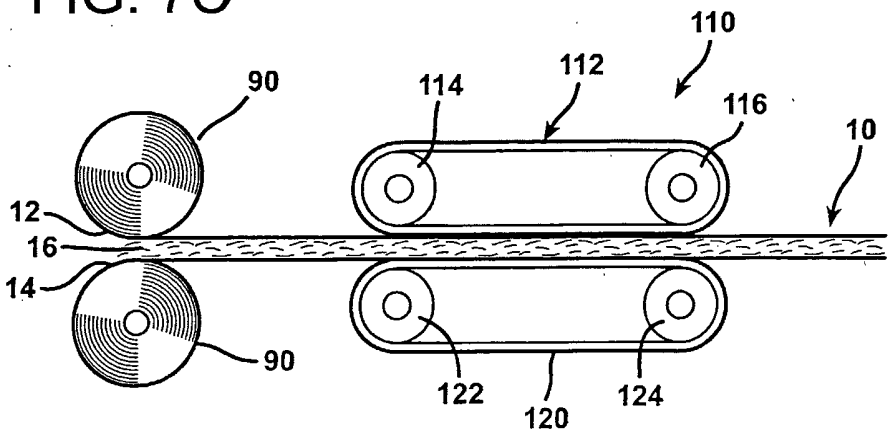

INTERNATIONAL SEARCH REPORT

International Application No
PCT/US2005/018011

A. CLASSIFICATION OF SUBJECT MATTER
B32B7/14 B32B5/26 E04B1/76 E04B1/78 F16L59/02
D04H13/00

According to International Patent Classification (IPC) or to both national classification and IPC

B. FIELDS SEARCHED

Minimum documentation searched (classification system followed by classification symbols)
B32B E04B D04H F16L

Documentation searched other than minimum documentation to the extent that such documents are included in the fields searched

Electronic data base consulted during the international search (name of data base and, where practical, search terms used)
EPO-Internal, WPI Data

C. DOCUMENTS CONSIDERED TO BE RELEVANT

Category °	Citation of document, with indication, where appropriate, of the relevant passages	Relevant to claim No.
X	US 4 824 507 A (D'AMICO ET AL) 25 April 1989 (1989-04-25) column 1, line 65 - column 2, line 2; claims 1-3,5; figures column 3, line 41 - line 51 column 5, line 28 - line 62 column 6, line 38 - line 63	1-21
X	US 2003/008581 A1 (TILTON JEFFREY A ET AL) 9 January 2003 (2003-01-09) page 3, paragraph 33 - paragraph 39; claims 1,5-7; figures 3,4 page 4, paragraph 43 - paragraph 44	1,4,5,8, 9

-/--

[X] Further documents are listed in the continuation of box C.

[X] Patent family members are listed in annex.

° Special categories of cited documents :

"A" document defining the general state of the art which is not considered to be of particular relevance

"E" earlier document but published on or after the international filing date

"L" document which may throw doubts on priority claim(s) or which is cited to establish the publication date of another citation or other special reason (as specified)

"O" document referring to an oral disclosure, use, exhibition or other means

"P" document published prior to the international filing date but later than the priority date claimed

"T" later document published after the international filing date or priority date and not in conflict with the application but cited to understand the principle or theory underlying the invention

"X" document of particular relevance; the claimed invention cannot be considered novel or cannot be considered to involve an inventive step when the document is taken alone

"Y" document of particular relevance; the claimed invention cannot be considered to involve an inventive step when the document is combined with one or more other such documents, such combination being obvious to a person skilled in the art.

"&" document member of the same patent family

Date of the actual completion of the international search	Date of mailing of the international search report
9 December 2005	23/12/2005

Name and mailing address of the ISA	Authorized officer
European Patent Office, P.B. 5818 Patentlaan 2 NL - 2280 HV Rijswijk Tel. (+31-70) 340-2040, Tx. 31 651 epo nl, Fax: (+31-70) 340-3016	Pamies Olle, S

1

Form PCT/ISA/210 (second sheet) (January 2004)

INTERNATIONAL SEARCH REPORT

International Application No
PCT/US2005/018011

C.(Continuation) DOCUMENTS CONSIDERED TO BE RELEVANT

Category °	Citation of document, with indication, where appropriate, of the relevant passages	Relevant to claim No.
X	WO 02/066877 A (SAINT-GOBAIN ISOVER) 29 August 2002 (2002-08-29) page 5, last paragraph - page 7, line 8; claims 1,8; figures page 7, line 35 - page 8, line 9	1-17
X	WO 02/096641 A (OWENS CORNING; SNYDER, JAMES, G) 5 December 2002 (2002-12-05) page 2, line 5 - line 9; claims 8,12-15 page 5, line 25 - page 6, line 12	1-9
X	US 5 848 509 A (KNAPP ET AL) 15 December 1998 (1998-12-15) column 3, line 28 - column 4, line 13; claims 1,6,10; figures column 5, line 32 - line 47	1,4,5,8, 9
X	WO 95/20707 A (ROCKWOOL INTERNATIONAL A/S; NOERGAARD, LUIS, JOERGEN; CLAUSEN, ANDERS,) 3 August 1995 (1995-08-03) page 6, line 16 - last line ; claims	1-9

1

INTERNATIONAL SEARCH REPORT

mation on patent family members

International Application No
PCT/US2005/018011

Patent document cited in search report	Publication date	Patent family member(s)	Publication date
US 4824507 A	25-04-1989	CA 1314202 C	09-03-1993
US 2003008581 A1	09-01-2003	NONE	
WO 02066877 A	29-08-2002	BR 0204193 A	18-02-2003
		CN 1457295 A	19-11-2003
		US 2003008092 A1	09-01-2003
		US 2002146521 A1	10-10-2002
WO 02096641 A	05-12-2002	US 2002179265 A1	05-12-2002
		US 2002182964 A1	05-12-2002
		US 2002182965 A1	05-12-2002
US 5848509 A	15-12-1998	AT 285496 T	15-01-2005
		AU 725990 B2	26-10-2000
		AU 6895596 A	19-03-1997
		BR 9610116 A	15-06-1999
		CA 2228179 A1	06-03-1997
		CN 1200161 A	25-11-1998
		CZ 9800568 A3	16-12-1998
		DE 69634088 D1	27-01-2005
		EP 0847465 A1	17-06-1998
		ES 2235196 T3	01-07-2005
		JP 11511522 T	05-10-1999
		NO 980866 A	27-02-1998
		PL 325290 A1	20-07-1998
		SK 26898 A3	09-09-1998
		TR 9800332 T2	21-08-1998
		WO 9708401 A1	06-03-1997
		ZA 9606926 A	13-02-1997
WO 9520707 A	03-08-1995	AT 200812 T	15-05-2001
		AU 1532395 A	15-08-1995
		CZ 9602094 A3	12-03-1997
		DE 69520784 D1	31-05-2001
		DE 69520784 T2	09-08-2001
		EP 0741826 A1	13-11-1996
		HU 75222 A2	28-04-1997
		PL 315656 A1	25-11-1996
		SK 97496 A3	07-05-1997