Oct. 22, 1968 W. C. NOTBOHM 3,406,931

THERMAL COMPENSATING TIE BEAM ASSEMBLY

Filed May 2, 1967 2 Sheets-Sheet 1

FIG-1

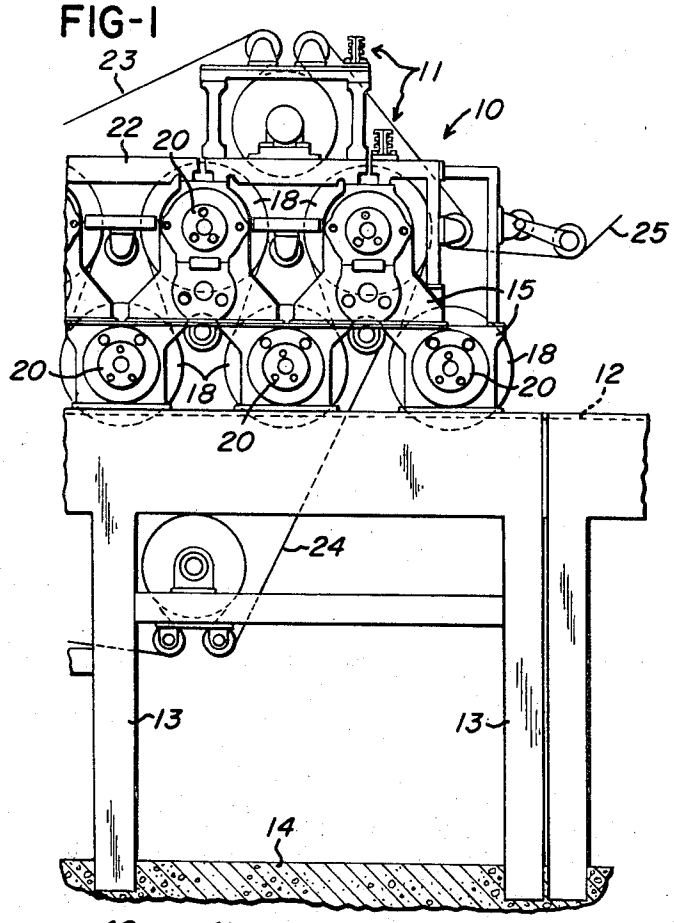

FIG-3

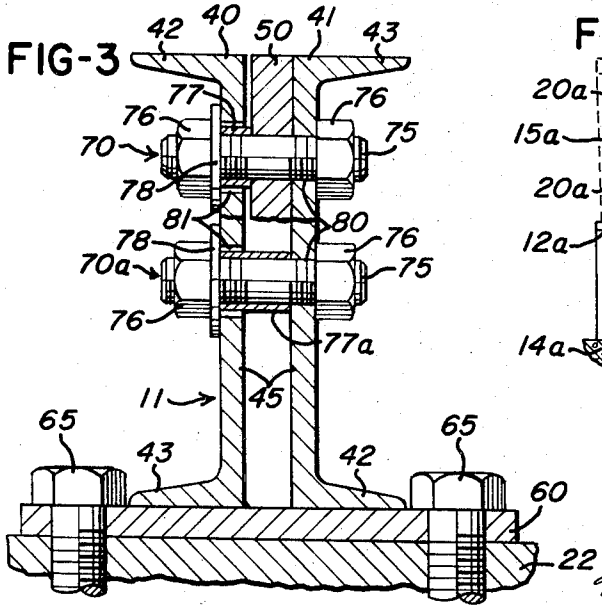

FIG-2

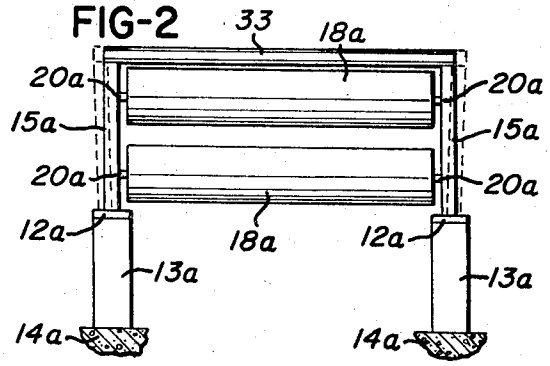

INVENTOR

WILLARD C. NOTBOHM

BY

Marechal, Biebel, French & Bugg

ATTORNEYS

Oct. 22, 1968 W. C. NOTBOHM 3,406,931

THERMAL COMPENSATING TIE BEAM ASSEMBLY

Filed May 2, 1967 2 Sheets-Sheet 2

FIG-4

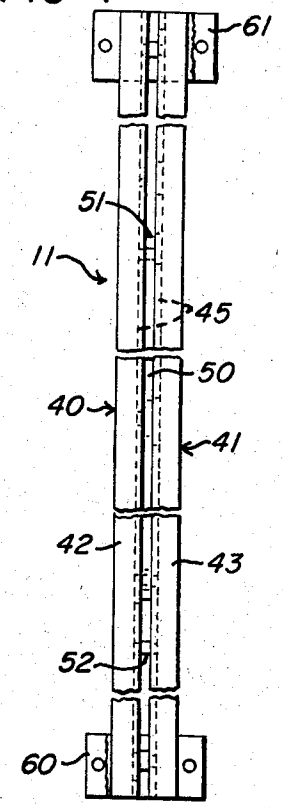

FIG-5

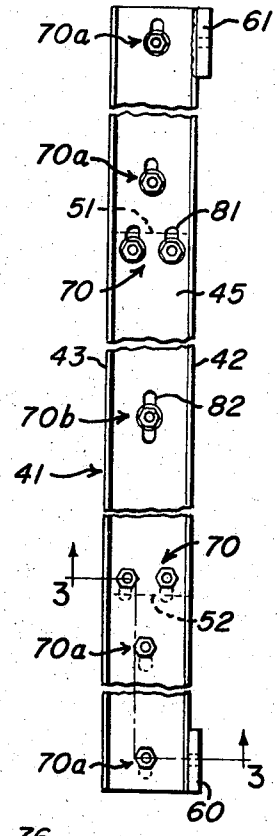

FIG-6

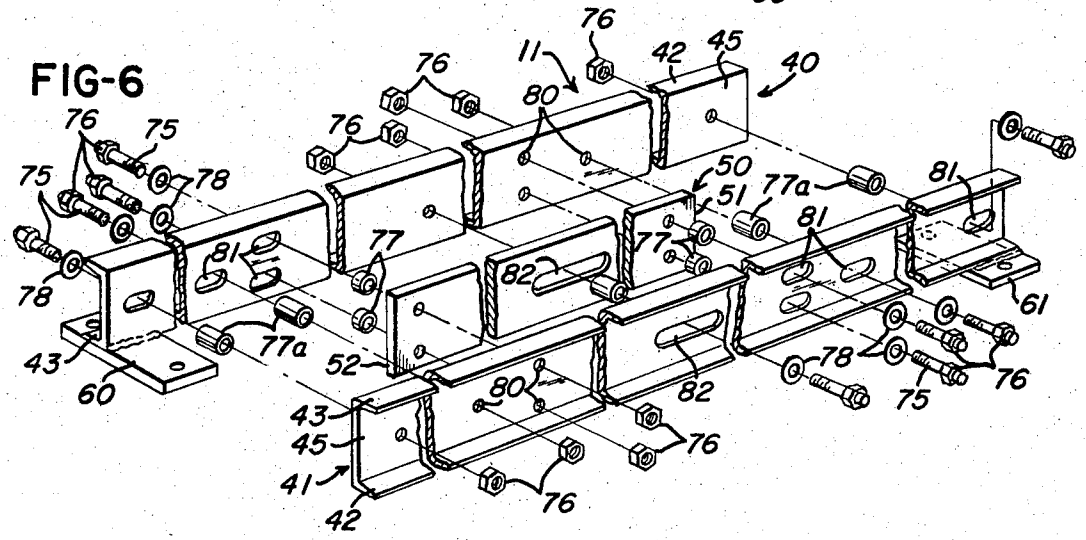

United States Patent Office 3,406,931
Patented Oct. 22, 1968

3,406,931

THERMAL COMPENSATING TIE BEAM ASSEMBLY

Willard C. Notbohm, Watertown, N.Y., assignor to The Black Clawson Company, Hamilton, Ohio, a corporation of Ohio

Filed May 2, 1967, Ser. No. 635,600
8 Claims. (Cl. 248—2)

ABSTRACT OF THE DISCLOSURE

A thermal compensating beam which does not vary in length due to changes in the ambient temperature. One use is in paper machine dryer sections wherein the side frames which support the dryer drums are secured at their lower ends to the concrete floor and are interconnected at their upper ends by tie beams which, because of their bimetallic construction, do not change in length as a result of temperature variations.

Background of the invention

In processing machinery such as paper machines for the continuous manufacture of various products in a web form, side frames are provided for supporting the various components of the machinery. As the machinery is designed for greater capacity, the speed at which the web is formed and the width thereof are gradually being increased, and it has become necessary to compensate for all characteristics of the machinery which might detract from a high quality end product, as well as those conditions which are detrimental to the operation of the machinery itself. One such characteristic is the misalignment of the side frames caused by thermal expansion of the crossbeams.

Since the side frames are usually anchored to the concrete supporting surface and interconnected at their top portions by tie beams which provide rigidity and accurate spacing to the machinery components, any changes in the ambient temperatures around the crossbeams tend to cause expansion of contraction thereof. The lower portions of the frames cannot expand or contract due to their connection to the floor, and thus the upper portions of the frames are forced apart by the expansion of the crossbeams so that the side frames are no longer parallel. This problem is especially acute in a paper machine dryer section wherein numerous drying rolls or drums are heated to a temperature substantially above normal room temperatures. For example, a 100° F. increase in temperature of a tie beam having a length of 360 inches would cause elongation of about 9/16 inch in a conventional steel crossbeam. This expansion may cause serious binding on the bearings which support the heavy drying rolls and lead to the eventual failure thereof, not to mention other problems, such as stresses in the anchoring bolts and soleplates, all created by the thermally induced distortion of the side frames.

Summary of the invention

This invention relates to an improved crosstie which does not expand or contract due to change in temperature thereof. Such a crossbeam extends between rigid connections with the side members of processing machinery and provides the necessary rigidity for holding these side members in accurate alignment. The crossbeam includes a pair of side beam members each having one end fixed to opposite ones of the side members and a central expansion member which is rigidly secured to the free ends of the side members. The central member has a coefficient of expansion approximately twice that of the side members so that, as the side members each changes in length, the properly designed central member changes twice this length to compensate for the expansion of both side members.

Brief description of the drawings

FIG.1 is a side elevation view of a paper machine dryer section utilizing tie beams in accordance with the invention;

FIG. 2 is an end view of a dryer section constructed according to the prior art;

FIG. 3 is an enlarged section on the line 3—3 of FIG. 5;

FIG. 4 is a plan view of the tie beam assembly;

FIG. 5 is a side view of the tie beam assembly; and

FIG. 6 is a fragmentary exploded view in perspective of the assembly of FIGS. 3–5.

Description of the preferred embodiment

FIG. 1 shows a fragment of a typical dryer section **10** in which the temperature compensating crossties or beams **11** of the invention can be utilized. It includes a pair of soleplates **12** supported by columns **13** rigidly secured in the concrete floor **14**. Frame members **15** are mounted on the soleplates **12** in a lattice arrangement for supporting the various dryer rolls **18** which have their bearings **20** mounted on these frame members. Upper horizontal beams **22** interconnect the top portions of the upper frame members **15** along each side of the machine. FIG. 1 also shows upper and lower felts **23** and **24** between which the paper web **25** is sandwiched in the usual way as it passes alternately around the rolls **18**.

The side frames **15** are interconnected at frequent intervals by crossties **11** which extend between the upper horizontal beams **22** to secure the upper portions of the side frames rigidly together so that the bearings **20** on the opposite ends of the rolls **18** remain in alignment and so that rigid alignment of the machinery components is precisely maintained to enable the machinery to operate at high speed.

The problem which the crossties **11** of this invention solve is illustrated in FIG. 2 for a dryer section constructed according to the prior art. The columns **13***a* extend vertically upward from rigid connections with the concrete floor **14***a* or its equivalent. These columns support the soleplates **12***a* and side frames **15***a* which, in turn, support the dryer rolls **18***a* in bearings **20***a*, and the prior art cross member **33** rigidly interconnects the top ends of the side frames **15***a*. When the machine is initially installed, it is a simple task to align the vertical side frames **15***a* so that they are parallel and to position the rolls **18***a* and their bearings **20***a* so that they operate in alignment free from any binding.

When the dryer section of FIG. 2 is started in operation and the temperature of the rolls **18***a* heated as required, the crossties **33** have their temperature elevated thus expanding and forcing the side frames **15***a* apart so that they are no longer parallel with the consequent disadvantages set forth above. The columns **13***a* and associated building structure do not expand in a similar manner because they are remote from the elevated temperatures and which are, in fact, a very large heatsink which tends to stabilize their temperatures.

Referring now to FIGS. 3–5, the crosstie **11** in accordance with the invention is illustrated in detail. This crosstie includes two parallel beam members **40** and **41** in the form of channels having the outwardly extending flanges **42** and **43** in the top and bottom thereof and the intermediate web portions **45** having flat smooth surfaces on the inner and outer sides thereof, respectively. Sandwiched between these beam members is the elongated expansion member **50** having a rectangular cross-section with flat surfaces on its opposite sides but shorter than beams **40** and **41** so that its ends **51** and **52** are spaced inwardly

from both ends of the beam members as shown in FIG. 4. However, the length of the expansion member **50** may be equal to that of the beams or may be of differential length as the exact length is a function of the difference in thermal expansivity of the expansion member and the beam members **40** and **41**. The beam and expansion members **40**, **41** and **50** are preferably coextensive in height, but the coefficient of thermal expansion of the expansion member **50** is substantially greater and preferably twice that of the beam members, e.g., steel and aluminum, respectively.

The left-hand beam member **40** as viewed in FIGS. 3 and 4 has a mounting plate **60** welded or otherwise rigidly secured to one end thereof. Similarly the right-hand beam member **41** as viewed in FIG. 4 has a mounting plate **61** secured to the end thereof opposite the mounting plate **60**. Each of the plates **60** and **61** is rigidly secured, as by bolts **65** to the respective top beams **22** of the side frames **15**. The end of each of members **40** and **41** opposite its mounting plate **60** or **61** is free to slide on the other mounting plate **61** or **60**, respectively.

The right and left-hand members **40** and **41** are connected to each other and to the expansion member **50** by a series of connector assemblies **70** constructed and arranged to provide for predetermined relative movement of the members **40**, **41** and **50** lengthwise thereof. The connector assembly **70** shown in detail in FIG. 3 is one of the two such assemblies which secures the end **52** of member **50** to the free end of member **41**. As shown in FIG. 3, it includes a stud **75** threaded on both ends to receive a nut **76**, a spacer sleeve **77**, and a washer **78**.

The connector assembly **70** in FIG. 3 secures the members **41** and **50** while providing for relative sliding movement of members **40** and **50**. Member **41** accordingly has a bore **80** receiving the stud **75**, but the member **40** has a slot **81** opposite bore **80** which is of sufficient width to receive the sleeve **77** slidingly therein, and approximately three times as long as it is wide. There is an identical connector assembly **70** vertically aligned below the assembly **70** in FIG. 3, as shown in FIG 5, and it will be apparent that the sleeves **77** and washers **78** cooperate with nuts **76** to clamp the end portion of member **50** with respect to the free end of beam **41** while providing for sliding movement of these parts relative to the fixed end of beam **40**.

Two connector assemblies **70** are provided between the opposite end of the member **50** and the free end of the beam member **40**, but as shown in FIG. 5, the arrangement of these parts is reversed to secure members **40** and **50** together, as indicated by the full line showing of the slots **81**. Similar connector assemblies **70*a*** are provided between members **40** and **41** beyond the ends of member **50**, and they differ from assemblies **70** only in that their spacer sleeves **77*a*** are longer than the sleeves **77** by a distance approximately equal to the thickness of member **50** to provide a guiding action for relative sliding movement of members **40** and **41**.

In the center of the crosstie **11**, a connector assembly **70*b*** is provided which is itself identical with the assemblies **70*a*** and is similarly mounted in a bore in one of the beam members **40–41**, shown as member **40**. The other beam member **41** has a slot **82** approximately twice the length of each of slots **81** to provide for adequate relative movement of the adjacent portions of members **40** and **41**, and there is a similarly longer slot **82** in member **50**.

The spacing between the various connector assemblies **70**, the length of the slots, and the number of connector assemblies is determined by the specific application of the crossbeam. When considerable length is to be utilized, additional pairs of the connectors can be interposed along the length of the expansion member **50**, similarly to the assembly **70*b***.

In use, the mounting plates **60** and **61** on the opposite ends of the crossbeam **11** are rigidly secured to the components of the machinery which are to be interconnected so that the distance therebetween will not vary. For example, in a dryer section, the crossbeam is used to interconnect the side frames **15** across the width of the machines in close proximity to the heated dryer rolls **18**. The side frames **15** are aligned parallel during installation, and the crossbeams **11** are secured in position to hold this parallel relationship during operation of the machinery.

When the machine commences operation and the temperature of the crossbeam **11** is elevated, the left-hand member **40** which is secured to the mounting flange **60** expands upwardly (as viewed in FIGS. 4 and 5) so that its free end extends a maximum distance. At the same time, the right-hand member **41** expands downwardly from its fixed end on the mounting plate **61** so that the lower end thereof extends a maximum distance. Simultaneously, since the expansion member **50** has a coefficient of expansion in the order of twice that of either of the side members **40** and **41**, it expands so that the ends **51–52** thereof are spaced an additional distance from the center thereof.

As a result of the connectors **70**, the free ends of the side members **40** and **41** are allowed to move with respect to the fixed ends thereof since the various spacer sleeves permit the connector assemblies **70** to slide in the associated slots to compensate for the extension of the side members **40** and **41** without detracting from the rigidity of the crossbeam **11**. One end **52** of the expansion member **50** is connected with the free end of the member **41** so that this end of the expansion member and the adjacent free end of the member **41** are allowed to expand together. Similarly the other end **51** of the expansion member **50** and the free end of member **40** are connected to expand together. Accordingly, the side members **40** and **41** have their free ends rigidly interconnected by the expansion member **50**.

Stabilization is thus provided to the crossbeam **11** by the sliding connection between the free ends and adjacent fixed ends of the members **40** and **41**. The central connector assembly **70*b*** moves with the member **40** to one end of the slots in the side and expansion members **40** and **50** thus allowing the member **40** to extend. Thus each of the three members **40**, **41** and **50** is allowed to expand lengthwise, with the expansion member **50** compensating for the change in length of the side members **40** and **41** so that there is no change in the over-all length of the crossbeam caused by temperature variations. Should the temperature variations be decreased rather than increased, the reverse of the above operation would occur, again without variation in the total length of the crossbeam **11**. Accordingly, the invention has provided a thermal compensating beam **11** for use in processing machinery where expansion and contraction cannot be tolerated because it will destroy the tolerances required to produce high quality in the product being processed or because it will cause damage to the machinery itself due to thermally induced misalignment. The tie beam may extend across the width of a paper dryer or the like to interconnect the side frames in order to hold them in a precise parallel position regardless of changes in temperatures. While the invention has been described in connection with a paper dryer, it should be obvious that it can be utilized in many different types of machinery and other apparatus without departing from the scope of the invention.

While the form of apparatus herein described constitutes a preferred embodiment of the invention, it is to be understood that the invention is not limited to this precise form of apparatus, and that changes may be made therein without departing from the scope of the invention which is defined in the appended claims.

What is claimed is:

1. A crossbeam assembly for the side frames of processing machinery and the like to maintain a predetermined distance between said frames over a wide range of ambient temperature variations, said assembly comprising a pair of elongated beam members extending in side

by side relation, means for securing one end of a first of said beam members to the first of the side frames while leaving the other end thereof free to move relative to the second side frame, means for securing one end of the second of said beam members to the second of said side frames while leaving the other end of said second beam member free to move relative to the first side frame, an expansion member having a coefficient of expansion greater than that of said beam members extending in side by side relation with said beam members, and fastening means securing said free end of said first beam member to one end of said expansion member and securing said free end of said second beam member to the opposite end of said expansion member to provide compensation for the expansion or contraction of said beam members caused by changes in temperature by corresponding total expansions of contractions of said expansion member.

2. A crossbeam assembly as defined in claim 1 wherein said expansion member is interposed between said beam members.

3. A crossbeam assembly as defined in claim 1 wherein each of said fastening means includes a stud member which extends through circular openings in one of said beam members and said expansion member and through an elongated slot in the other of said beam members, and a spacer sleeve surrounding said stud and interposed between said expansion member and said other of said beam members to provide for relative movement between said other of said beam members and said expansion member.

4. A crossbeam assembly as defined in claim 1 wherein said expansion member has a coefficient of thermal expansion which is approximately twice that of said first and second beam members.

5. A crossbeam assembly as defined in claim 3 wherein intermediate connector assemblies are provided between said first and second fastening means for adding additional rigidity to the assembly while permitting relative movement therebetween.

6. A crossbeam assembly as defined in claim 3 wherein said expansion member has a length less than that of said beam members, and comprising connector assemblies interposed between said beam members in the space beyond the ends of said expansion member to add rigidity and strength to the assembly while permitting relative movement between said side members.

7. A crossbeam assembly as defined in claim 1 wherein a plurality of fastening means in addition to said first and second fastening means are provided between said beam and expansion members for adding strength and rigidity to the assembly while permitting relative longitudinal movement between said members to compensate for thermal expansion thereof.

8. A crossbeam assembly as defined in claim 2 wherein said beam members are channel shaped, and said expansion member has a rectangular cross-section, said beam members having their flat sides diasposed in contact with the flat sides of said rectangular expansion member.

References Cited

UNITED STATES PATENTS

1,986,132	1/1935	Bigelow	103—218
2,356,721	8/1944	Hagemann	248—19
2,920,850	1/1960	Campbell	248—146
2,981,463	4/1961	Dagrell	248—2 XR
3,066,449	12/1962	Cramer	52—294

JOHN PETO, *Primary Examiner.*