June 16, 1931. T. T. ALLEN ET AL 1,809,817

SAFETY UNIT FOR MOTION PICTURE PROJECTORS

Filed Sept. 23, 1927 3 Sheets-Sheet 1

FIG. 1.

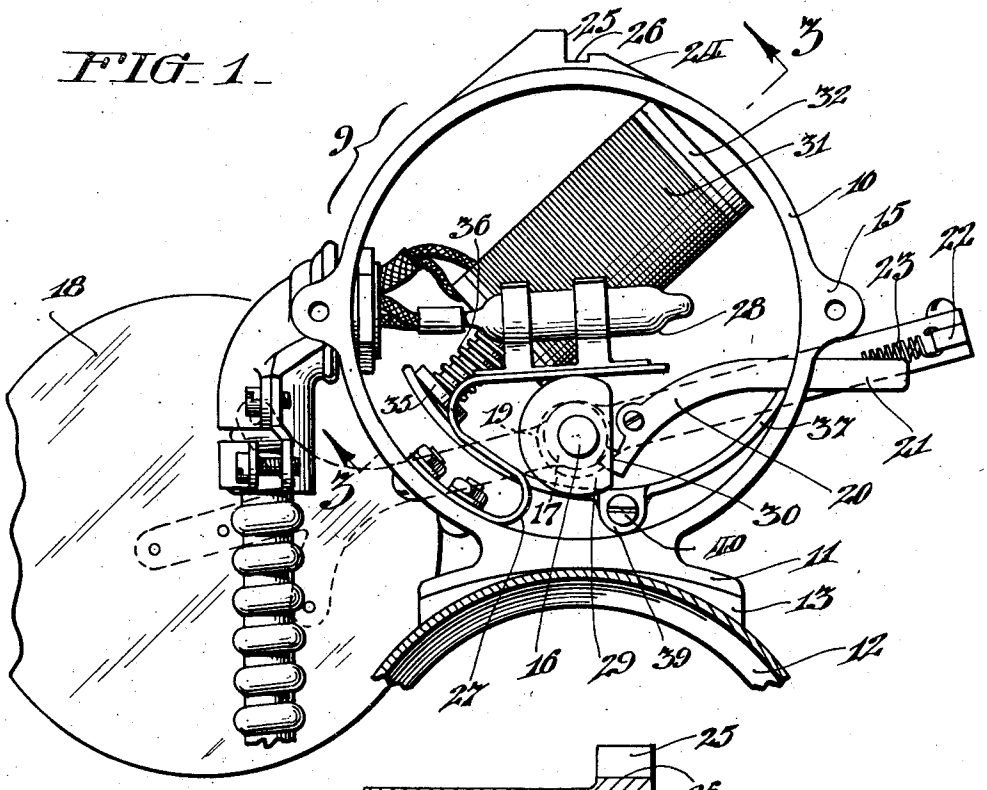

FIG. 2.

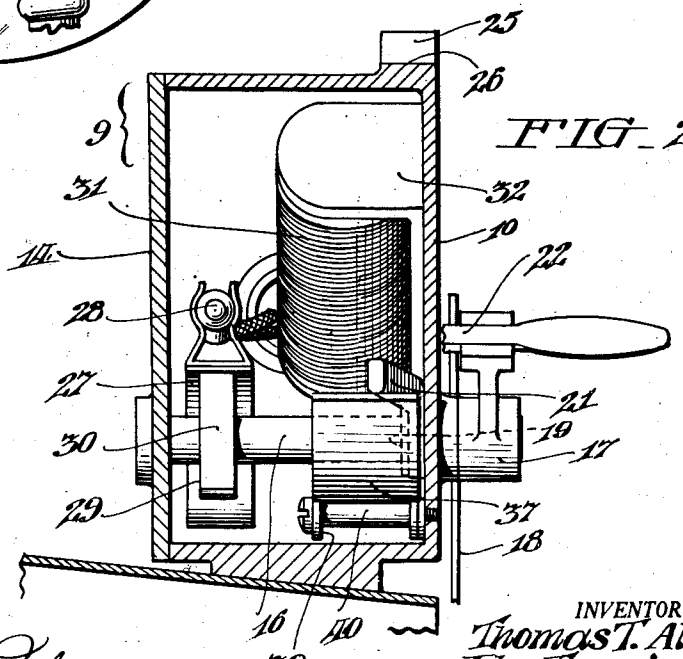

WITNESSES:

Alfred E. Schinzer.

N. P. Muriel

INVENTOR:

Thomas T. Allen &
John Francis Adams,

BY

Joshua R. H. Potts

ATTORNEY

June 16, 1931. T. T. ALLEN ET AL 1,809,817

SAFETY UNIT FOR MOTION PICTURE PROJECTORS

Filed Sept. 23, 1927 3 Sheets-Sheet 2

FIG. 3.

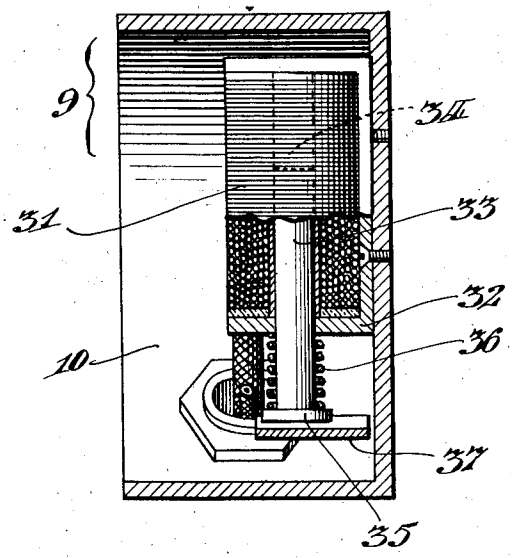

FIG. 4.

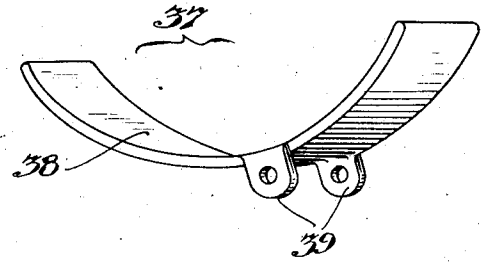

WITNESSES:

Alfred E. Schlinger.

W. P. Murrill

INVENTORS:

Thomas T. Allen &
John Francis Adams,

BY

Joshua R. H. Potts

ATTORNEY.

June 16, 1931. T. T. ALLEN ET AL 1,809,817

SAFETY UNIT FOR MOTION PICTURE PROJECTORS

Filed Sept. 23, 1927 3 Sheets-Sheet 3

FIG. 5

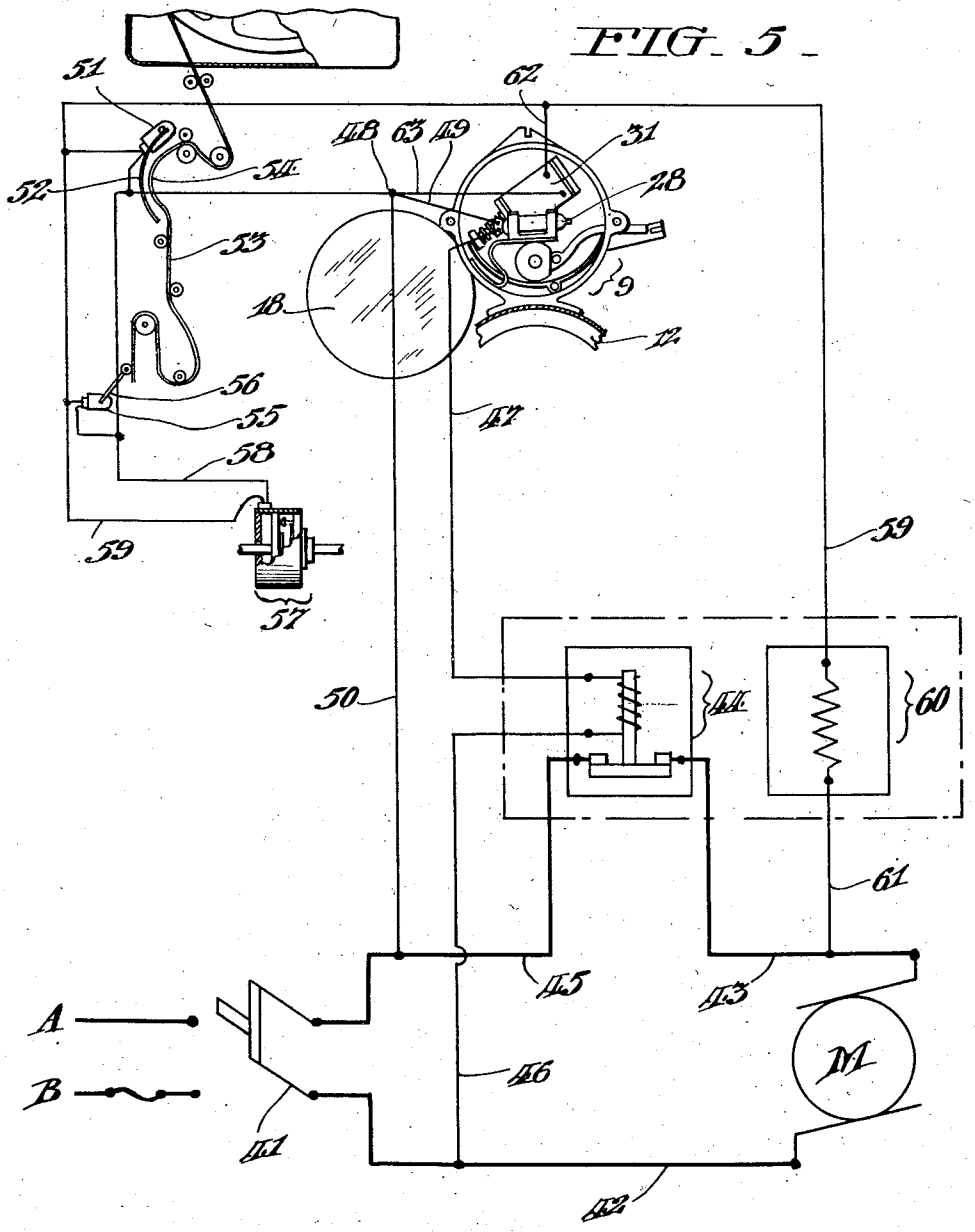

WITNESSES:

Alfred E. Ischinger

W. P. Merrick

INVENTORS:

Thomas T. Allen &

John Francis Adams,

BY

Joshua R. H. Potts

ATTORNEY.

Patented June 16, 1931 1,809,817

UNITED STATES PATENT OFFICE

THOMAS T. ALLEN AND JOHN FRANCIS ADAMS, OF PHILADELPHIA, PENNSYLVANIA, ASSIGNORS TO SENTRY SAFETY CONTROL CORPORATION, OF PHILADELPHIA, PENNSYLVANIA

SAFETY UNIT FOR MOTION PICTURE PROJECTORS

Application filed September 23, 1927. Serial No. 221,491.

Our invention relates to fire preventing apparatus for motion picture projecting machines and more particularly to a safety unit for automatically stopping the machine and obstructing the rays of the arc when the machine or the film functions improperly.

During the operation of a motion picture projecting machine, if the film fails to move at or above a certain rate of speed through the path of the rays of light emanating from the lamp, it will be ignited by the intense heat and oftentimes cause a disastrous fire. The film may cease to move due to its jamming or clogging in the magazines, its sprocket holes tearing, the motor being deprived of its power, the breaking of a belt, or the breaking of the film itself. The speed of the film may be reduced by the motor being supplied with insufficient power, slippage of a belt, trouble in the motor or in the projecting mechanism, or by other causes.

The object of this invention is to provide a unit for stopping the projecting mechanism and intercepting the rays of light passing through the film upon the occurrence of any incident or accident, which might cause the film to ignite, regardless of its nature, or the nature of the situation created by its occurrence.

Another object of the invention is to provide a unit capable of connection into an electric circuit in which certain devices are adapted to coact with said unit and thus practically eliminate the fire hazard incident to the operation of a motion picture projector.

Another object of the invention is to provide a safety device or main unit which is sensitive and positive in operation.

Another object of the invention is to provide such a safety device having all the operating parts enclosed in a single casing.

Another object is to provide a safety device having few parts easily assembled and unlikely to get out of working order.

Another object of the invention is to so construct the safety device unit that it may be economically manufactured and installed and of such construction that it may be readily incorporated in any standard projecting machine.

Generally stated, the invention contemplates a safety unit for incorporation in a motion picture projecting machine and comprises a dowser for obstructing the rays of light from the arc, a locking cam rotatable with said dowser, a trigger for engaging the cam to hold the dowser out of light obstructing position, a lever rockably supported in the casing, a solenoid having a plunger which is drawn therein when the solenoid is electrically energized, and a spring around the plunger for striking the end of the plunger against one end of said lever when the solenoid is deenergized to thereby cause the other end of the lever to kick the trigger out of engagement with the locking cam and thereby permit the dowser to fall into light obstructing position.

The drawings illustrate an embodiment of the invention and the method of connecting the same into the electrical wiring of a motion picture machine and the views therein are as follows:—

Figure 1 is a rear view of a safety device unit embodying the invention, and shows same mounted upon a fragment of a picture machine lamphouse cone; the cover of the device being omitted and a portion of a dowser plate broken away.

Figure 2 is a side view of the device shown in Figure 1, looking from the right, but showing the casing in section and its cover in place.

Figure 3 is a cross-sectional view taken on line 2—2 of Figure 1.

Figure 4 a perspective view of the trip lever forming a part of the device, and

Figure 5 is a wiring diagram showing the manner of connecting the safety unit into the electric wiring of a motion picture projecting machine and illustrates its relation to the other elements and particularly those which operate to actuate the unit.

Referring now more in detail to the drawings and particularly to Figures 1, 2, 3, and 4, the safety device or unit, which is indicated in its entirety by the reference numeral 9, is provided with a casing 10 having a base 11 by means of which it may be mounted upon the cone 12 of a picture machine lamphouse.

As the cones of different machines are of varying diameters, base 11 is preferably provided with an arcuate bottom adapted to fit the largest size of cone and adapted to the cones of smaller diameter by means of fillers 13 inserted between base 11 and cone 12.

The rear of casing 10 is preferably enclosed by a cover 14 which may be removably secured thereto, as by bolts or screws engaging lugs 15, and said cover acts as the rear bearing for a shaft 16 journaled in the front of casing 10 and having a dowser handle 17 secured thereon and abutting the outside of the casing. A dowser plate 18 is secured to one end of handle 17 and adapted to swing over the opening of cone 12 and intercept all rays of light passing therethrough.

The dowser plate 18 is held out of light obstructing position by means of a locking cam 19 fixed on the shaft 16 and engaged by a trigger 20 pivoted in the casing 10 and having its arm 21 extending outwardly through a suitable slot in casing 10. When the dowser plate 18 is released and falls into light obstructing position, it is important that it be positively held against oscillation and this is accomplished by means of a latch 22 rockably mounted in the end of dowser handle 17 and yieldingly held against outward movement by a spring 23. As dowser plate 18 falls, the latch 22 will engage the side of casing 10, ride up a slope 24, abut a shoulder 25 and be drawn downwardly into a notch 26 by spring 23; thus quickly and positively locking the dowser plate 18 in light obstructing position.

A spring support 27 is mounted in the casing 10 through an ogee portion while its upper flat end has a tendency to tilt or dip downward. The position of the upper end is regulated or adjusted by a cam 29 fixed on the shaft 16 which engages the under side of said flat upper end. This upper end of said spring support carries a mercury switch 28. When the trigger arm 21 is raised so that trigger 20 releases the locking cam 19 and allows the dowser plate 18 to fall, the cam 29 will be rotated until the flat face 30 formed on its periphery will be disposed immediately below the upper flat end of the spring support 27, thus allowing the upper end of the spring support 27 to dip downwardly and tilt the mercury switch 28, thereby causing the mercury therein to flow away from the poles of the switch and break the electric circuit into which the switch is connected.

A solenoid 31 is secured in the casing 10 by support in a bracket 32, and is provided with a plunger 33 which acts as its armature. A core 34 is fixed in the upper end of solenoid 31 and limits the inward movement of, and assists in holding plunger 33 when the solenoid is energized. A spring 36 encircles the plunger 33 between the flange of the bracket 32 and a head 35 formed on its outer end, and tends to move the plunger 33 outwardly against one end of a lever 37 rockably mounted in casing 10 and having its other end adapted to strike against the trigger arm 21 to kick it out of engagement with the locking cam 19 when the solenoid is deenergized.

The lever 37 may consist of a flat plate 38 curved to give the required movement and provided with inturned ears 39 through which a shouldered bolt 40 may be passed and threaded into casing 10. When the solenoid 31 is energized, plunger 33 will be retracted against the action of spring 36 and allow trigger 20 to hold dowser 18 out of light obstructing position. When solenoid 31 is deenergized, spring 36 will force plunger head 35 against the inner end of lever 37 and cause its other end to kick the trigger arm 21 out of engagement with the locking cam 19, thereby releasing dowser 18 which will drop to a position to intercept the rays of light passing through cone 12. As the cam 29 is rotated the mercury switch will be tilted thereby breaking the circuit in which it is connected. Solenoid 31 is adapted to be deenergized whenever the machine ceases to function properly and automatically actuates the safety device as just described; manual operation of the device is provided for by extending the trigger arm 21 through the side of casing 10.

Referring more particularly to Figure 5, a suitable source of electrical energy is indicated by the power line A—B to which a double pole switch 41 is connected. One pole of switch 41 is connected to one side of the motor M, which drives the projecting machine, by a wire 42. The other side of motor M is connected by wire 43 to one side of a relay 44 and the other side of relay 44 is connected to the other pole of switch 41 by a wire 45; thus completing the motor circuit.

One end of the winding of relay 44 is connected to wire 42 by a wire 46 and its other end connected to one pole of mercury switch 28 by a wire 47. The other pole of mercury switch 28 is connected to a junction 48 by a wire 49 and a wire 50 connects junction 48 to wire 45. It will thus be evident that, when switch 41 and relay 44 are closed, the motor M will be supplied with power and that, when switches 41 and 28 are closed, the relay 44 will be energized and hold the motor circuit closed at this point. It therefore follows that, if the mercury switch 28 is tilted so as to break the circuit at this point, the relay 44 will be deenergized and open the motor circuit.

A film actuated switch 51 is located between the upper film magazine and the projection aperture and provided with a contact arm 52 which is disposed in close proximity to the path of the film 53 where same forms the upper loop 54. Should loop 54 be enlarged from any cause, it will engage arm 52 and close the switch 51 or, should the film

break above the aperture window, the broken end of the film will strike against the arm 52 and close the switch 51. A second film controlled switch 55 is mounted below the intermittent sprocket and provided with a gravity arm 56 which rides upon the film 53 at this point and is adapted to drop and close the switch 55 if the film moves substantially out of its normal path.

If the film fails to move through the projecting machine at or above a certain rate of speed, the picture is not properly projected upon the screen and oftentimes a decided flicker is produced. Also, if the film should move at an excessively slow rate of speed, there is danger of it exploding from the intense heat generated by the lamp. In order to overcome this difficulty, we provide a centrifugal switch 57 which is adapted to be connected to some rotating part of the projecting machine and provided with contact arms which engage fixed contacts and close the circuit whenever the rotatable part of the device ceases to revolve at or above a certain rate of speed.

The switches 51, 55 and 57 constitute the subject-matter of other and separate applications filed and co-pending herewith.

With a device of this nature installed upon a machine, it is possible to not only insure against the danger of fire but also against the possibility of faulty projection. Switch 57 has been shown attached to a shaft but we provide this switch in several forms so that it may be attached to the most convenient part of the mechanism as described in the co-pending application pertinent thereto.

A wire 58 connects one side of switches 51, 55 and 57 to junction 48 and a wire 59 connects the other side of these switches to one side of a resistance 60 which has its other side connected to wire 43 by a wire 61. A wire 62 connects one end of the winding of the solenoid 31 to wire 59 and a wire 63 connects the other end of the winding to junction 48, thus connecting the switches 51, 55 and 57 in parallel with solenoid 31.

When the motor circuit is provided with energy, a current may flow through wire 61, resistance 60, wire 59, wire 62, the winding of solenoid 31, wire 63, wire 49, switch 28, wire 47, the winding of relay 44 and wire 46, thus energizing solenoid 31 and causing it to hold the plunger 33 against the action of spring 36. Should any one of the switches 51, 55 or 57 be closed, a sudden rush of current would flow from the wire 59 through the closed switch, wire 58 and wire 49 to the mercury switch 28, thus acting as a shunt circuit and momentarily depriving the circuit through the solenoid 31 of a portion of its power so that spring 36 overcomes the reduced holding power of the solenoid and moves the plunger 33 against the lever 37.

Resistance 60 is connected in series with solenoid 31 and switches 51, 55 and 57 in order to reduce the current flowing through the switches and thus avoid the possibility of the switches arcing when actuated.

From the foregoing it is evident that the closing of switches 51, 55 or 57 will actuate the safety device 9 which, in turn, will open the motor circuit by deenergizing relay 44. It is therefore apparent that, should the film break, jam or tear, switches 51 or 55 will close and actuate the safety device 9; should the film fail to move at or above a predetermined speed, switch 57 will close the circuit and actuate the safety device 9; should motor M be deprived of its power, solenoid 31 will be deenergized and cause the dowser plate 28 to drop and thereby intercept the rays of light. Thus our improved apparatus functions to insure safe and proper operation of motion picture projecting machines.

It, of course, is understood that the safety unit illustrated herein may be modified and changed in various ways without departing from the invention herein set forth and hereafter claimed.

We claim:—

1. In combination with a motion picture projecting machine and its motor, a control apparatus including a safety device having a dowser, a switch and an electro-magnet; a relay connected in series with the motor and having its winding connected in series with the switch and in parallel with the motor; film actuated switches connected in parallel with the electro-magnet; and a centrifugal switch connected in parallel with the electro-magnet and film actuated switches.

2. In combination with a motion picture projecting machine and its motor, a control apparatus including a safety device having a dowser, a mercury switch and an electro-magnet; a relay connected in series with the motor and having its winding connected in series with the switch and in parallel with the motor, film actuated switches connected in parallel with the electro-magnet, a resistance connected in series with said switches and magnet, and a centrifugal switch connected in parallel with the electro-magnet and film actuated switches.

3. A safety unit for motion picture projecting machines including a dowser, a trigger adapted to hold the dowser out of light obstructing position, a lever hinged adjacent the trigger, a solenoid, a plunger therefor, and a spring surrounding and normally urging said plunger from said solenoid, said solenoid when energized, holding said plunger against the action of the spring, whereby the trigger holds the dowser against the action of gravity, and said solenoid, when deenergized, releasing the plunger which strikes the lever to drop the trigger and allows the dowser to fall.

4. A safety unit constructed in accordance

with claim 3 in which there is provided a switch mounted on spring support, and a cam for positioning the support to hold the switch closed and for operating the same to open the switch when the dowser falls.

5. A safety unit for motion picture projecting machines comprising a casing, a dowser for obstructing the rays of light from the arc, a locking cam, a trigger for engaging said cam to hold the dowser out of light obstructing position, a lever rockably supported in said casing, a solenoid having a plunger which is drawn therein, when the solenoid is energized, and a spring surrounding said plunger to urge same against one end of said lever, when the solenoid is deenergized, thereby causing the other end of said lever to kick said trigger out of engagement with said locking cam and permit the dowser to fall.

6. A safety unit for motion picture projecting machines comprising a casing, a dowser for obstructing the rays of light from the arc, a locking cam, a trigger for engaging said cam to hold the dowser out of light obstructing position, a lever rockably supported in said casing, a solenoid having a plunger which is drawn therein, when the solenoid is energized, a spring surrounding said plunger for urging same against one end of said lever, when the solenoid is deenergized, thereby causing the other end of said lever to kick said trigger out of engagement with said locking cam and permit the dowser to fall, and a tiltable motor switch operated by the cam upon the falling of the dowser.

In testimony whereof we have signed our names to this specification.

THOMAS T. ALLEN.
JOHN FRANCIS ADAMS.