(No Model.) 2 Sheets—Sheet 1.

J. B. CORNWALL.

CORN CLEANER.

No. 411,759. Patented Sept. 24, 1889.

Fig. 1.

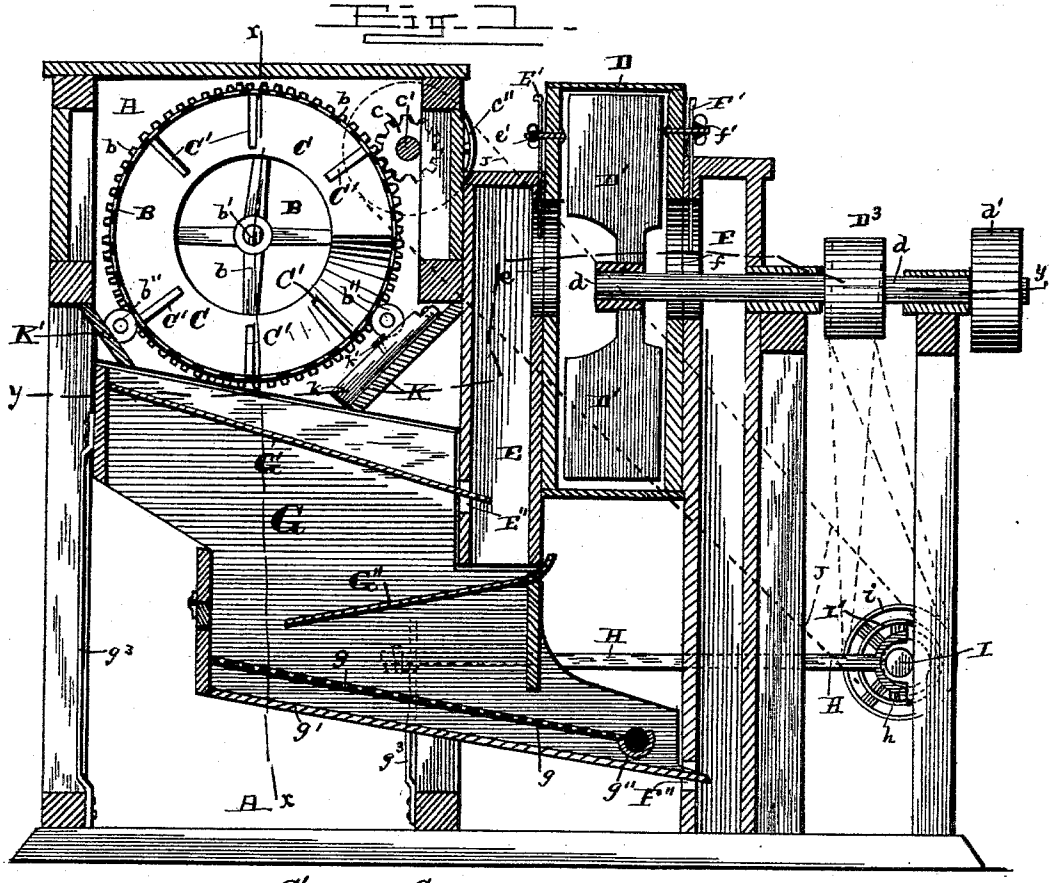

Fig. 4.

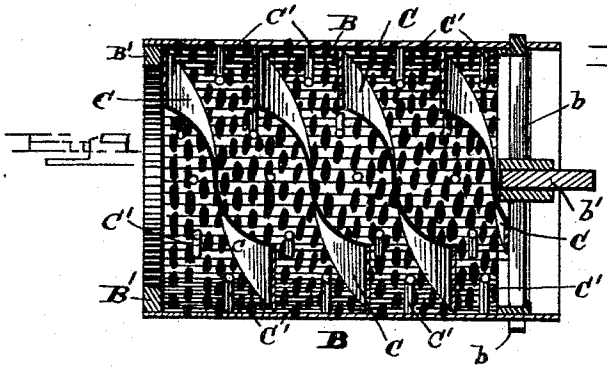

Fig. 5.

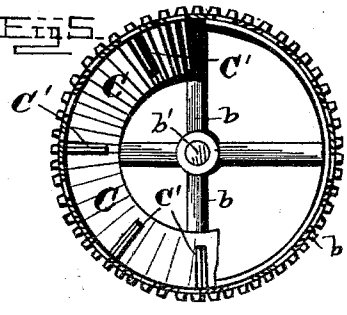

Witnesses
A. E. Towell.
S. L. Brooks.

Inventor
John B. Cornwall.
By his Attorney W. Alexander.

N. PETERS. Photo-Lithographer, Washington, D. C.

(No Model.) 2 Sheets—Sheet 2.

J. B. CORNWALL.

CORN CLEANER.

No. 411,759. Patented Sept. 24, 1889.

Fig. 2.

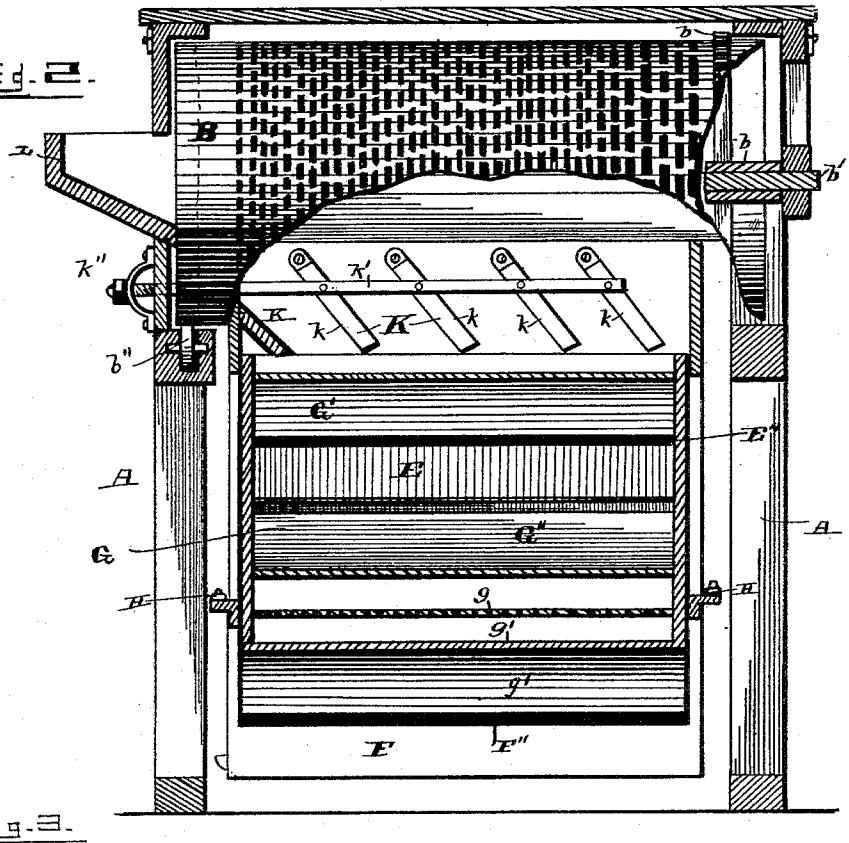

Fig. 3.

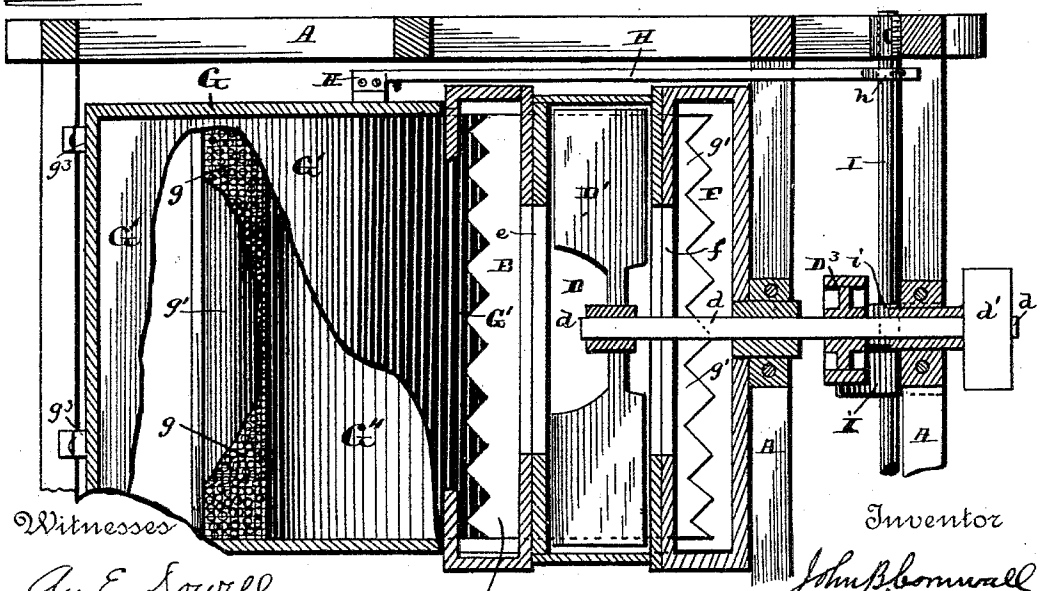

N. PETERS. Photo-Lithographer, Washington, D. C.

UNITED STATES PATENT OFFICE.

JOHN B. CORNWALL, OF MOLINE, ILLINOIS, ASSIGNOR TO THE BARNARD & LEAS MANUFACTURING COMPANY, OF SAME PLACE.

CORN-CLEANER.

SPECIFICATION forming part of Letters Patent No. 411,759, dated September 24, 1889.

Application filed May 11, 1888. Serial No. 273,546. (No model.)

To all whom it may concern:

Be it known that I, JOHN B. CORNWALL, of Moline, in the county of Rock Island and State of Illinois, have invented certain new and useful Improvements in Corn-Separators; and I do hereby declare that the following is a full, clear, and exact description thereof, reference being had to the accompanying drawings, and to the letters of reference marked thereon, which form part of this specification, in which—

Figure 1 is a central vertical longitudinal section through my improved grain-separator. Fig. 2 is a cross-section of the same on line *x x*, Fig. 1. Fig. 3 is a broken transverse horizontal section on line *y y*, Fig. 1. Figs. 4 and 5 are detail sectional views of the revolving cylindrical screen.

This invention is an improvement in grain-separators, being especially adapted for separating shelled corn from the cobs and other impurities, and for thoroughly cleaning other kinds of grain; and it consists in the novel construction and arrangement of a revolving screen, a vibrating screen-shoe, and air-trunks, as will be hereinafter clearly described, illustrated in the drawings, and concisely stated in the claims hereto appended.

Referring to the drawings by letter, A designates the main frame, and B is the horizontal revolving screen mounted therein. This screen is made, preferably, of sheet metal, perforated according to the kind or size of grain to be cleansed. One end of the screen is closed by an annular disk B′, and this end of the screen is supported on friction-rollers *b″ b″*, properly mounted on the frame A. In the other end of the screen is mounted a gear-wheel *b*, to the periphery of which is secured the end edges of the screen, and the hub of gear *b* is provided with a gudgeon *b′*, which has journals in a cross-piece of the main frame, as shown. The screen is thus supported without the employment of a central shaft. The material is fed into the screen through the opening in the annular disk B′, and the cobs and coarse impurities pass out at the other end of the screen between the spokes of wheel *b*.

To the inner surface of the screen is secured a spiral conveyer blade or blades C C, which force the material through the screen as the latter revolves, and C′ C′ are pins or studs arranged between the coils of the conveyer-blade, as shown. These pins stir up and thoroughly agitate the material in the screen when it is revolving.

c is a gear-pinion mounted on a short shaft *c′*, journaled in the frame A, which meshes with gear *b*.

c″ is a pulley on the outer end of shaft *c′*, which is driven by a belt and causes the rotation of the screen.

D is the fan-case to one side of the screen B, the fan D′ being mounted on a horizontal shaft *d*, journaled in the main frame at right angles to the axis of the screen.

E is a vertical air-trunk between fan-casing and screen, communicating with the fan-case by an opening *e*, having an adjustable slide E′, provided with a setting bolt and nut *e′*, by which the size of the opening can be regulated.

F is an air-trunk on the opposite side of the fan-case, of greater depth than trunk E, and communicating with the fan-case by an opening *f*, having an adjustable slide F′ and setting bolt and nut *f′*.

G is the screen-shoe, mounted in frame A below the screen and air-trunk E upon suitable spring-supports *g³ g³*.

G′ is an inclined apron in the upper portion of the shoe below screen B, and receiving the grain therefrom. The lower edges of apron G′ project into air-trunk E, through an opening E″ in the wall thereof, so that the grain will be delivered into said air-trunk, as indicated in the drawings. The edge of apron G′ in trunk E is serrated, as shown, to more thoroughly distribute the seed therein.

G″ is an oppositely-inclined apron in shoe G below apron G′, and extending under the trunk E, to catch the grain falling therethrough from apron G′. Apron G″ carries the grain back and delivers it to the head of an oppositely-inclined screen, through which the grain escapes onto a similarly-inclined apron *g′*, which conducts the grain into the bottom of air-trunk F, entering the latter through an opening F″ in its wall, as shown. The impurities are shed off screen *g* into an inclined transverse chute *g″*, by which they

are thrown out of the machine. It will be observed that the apron G″ virtually closes the lower end of trunk E, so that said trunk is closed on all sides but one only, where the air is admitted through an opening E″, which is large enough to admit both the grain and air to produce the separation, the grain being admitted through the upper part of the opening and the air entering the same below the grain.

The shoe is vibrated by pitman-rods H H, which are operated by cams *h h*, on a transverse shaft I, journaled in the main frame below and at right angles to the fan-shaft *d*. *i* is a pulley keyed on shaft I, and belted to a pulley D^3 on shaft *d* and driven therefrom. Shaft *d* has a pulley *d′*, by which it is driven by belting from any proper motor.

I′ is a pulley on shaft I, driving shaft *c* by a belt J on pulley *c″*, as shown in dotted lines, Fig. 1.

K K′ are shunt-boards on opposite sides of and below screen B, which shed the material escaping through said screen onto apron G′ of the shoe. Board K is provided with pivoted inclined shunt-blades *k k*, which distribute the material more equally, and which are adjusted by means of a rod *k′*, pivotally connected to the several pieces and set by means of any suitable retaining device *k″*.

L is a feed-spout attached to the casing A at one end of the screen B, and adapted to deliver material into the screen through the opening in the annular disk B′.

The operation is as follows: The fan-screw and screen having been started, material is fed into the screen B, and is carried therethrough by the conveyer-blades, the grain passing through the perforations in the screen onto apron G′ of the shoe, the pins C′ thoroughly agitating the material in its passage. The particles or trash or cobs too large to pass through the screen perforations are thrown out of the open end of the same. The motion of the shoe G causes the grain to fall from apron G′ onto apron G″ through air-trunk E, where the grain in falling is met by a strong air-current passing up through the trunk, as indicated by the arrows, and any light impurities in the grain are carried up by the currents into the fan-case, from whence they are ejected through the ordinary delivery-pipe. From apron G″ the grain falls upon screen *g*, which is of finer mesh than the perforations of screen B, and the grain passing through this screen onto apron *g′* is carried into air-trunk F, where it is subjected to another air-blast, which removes the light impurities separated from the grain during its passage through the shoe.

From the foregoing it will be seen that while the grain is passing through one shoe it is subjected to two distinct air-blasts. The thorough agitation of the material in the screen B loosens dirt and husks from the grain, and its subsequent treatment in the shoe insures its being thoroughly cleaned when it finally escapes from the machine.

Having described my invention, I claim—

1. In a grain-separator, the combination of a fan and two air-trunks, with a shaking-shoe extending beneath one air-trunk and to an opening in the side of the other air-trunk, and provided with aprons and a screen, whereby grain delivered onto the shoe is passed through one air-trunk, again received upon the shoe, passed through the screen, and into the second air-trunk, substantially as described.

2. The combination of the vibrating shoe G, constructed substantially as described, with the vertical air-trunks E and F, and the fan communicating therewith, air-trunk E being situated above the delivery end of the shoe and adapted to receive the grain in its passage from the upper apron of the shoe to the screen thereof, and air-trunk F receiving the grain as it finally leaves the shoe, substantially as specified.

3. The combination of the fan and pair of vertical air-trunks E and F, having openings in their sides and at bottom, with a vibrating shoe extended below trunk E and discharging into the trunk F and having an apron entering trunk E through its side opening to deliver grain therethrough, and a screen extending below said trunk E, and an apron below said screen adapted to receive the grain after its passage therethrough and deliver it to the air-trunk F, all substantially as described.

4. In a grain-separator, the combination of the vertical air-trunks E and F, and fan, with the screen-shoe extended below trunk E and to an opening in trunk F, and having an apron G′ delivering grain into trunk E, a screen receiving the grain after its passage through trunk E, and an apron below said screen adapted to deliver the grain into air-trunk F, said aprons having serrated edges to distribute the grain in the trunks, substantially as described.

5. In a separator, the combination, with the fan and two air-separating trunks, of a vibrating shoe G, constructed substantially as described, extended beneath one air-trunk to the other and provided with two aprons, and a sieve located between the aprons and adapted to deliver the material received on the shoe to both of the air-trunks successively, and subject the material to the action of the sieve in its passage from one air-trunk to the other, substantially as and for the purpose described.

In testimony that I claim the foregoing as my own I affix my signature in presence of two witnesses.

JOHN B. CORNWALL.

Witnesses:
E. H. SEIFFERT,
CHAS. S. KERNS.