(12) UK Patent Application (19) GB (11) 2565132 (13) A

(43) Date of A Publication 06.02.2019

(21) Application No: 1712539.4

(22) Date of Filing: 04.08.2017

(71) Applicant(s):
**Gyrus Medical Limited**
**(Incorporated in the United Kingdom)**
**Fortran Road, St Mellons, CARDIFF, CF3 0LT, United Kingdom**

(72) Inventor(s):
**James Alan Dickson**

(74) Agent and/or Address for Service:
**Astrum ElementOne Limited**
**Merlin House, Langstone, Newport, NP18 2HJ, United Kingdom**

(51) INT CL:
***A61B 17/29*** (2006.01)

(56) Documents Cited:
**GB 2546626 A**
**US 20090248020 A1**
**US 20020188294 A1**
**WO 2015/175298 A2**
**US 20070173814 A1**

(58) Field of Search:
INT CL **A61B**
Other: **EPODOC, WPI**

(54) Title of the Invention: **Bipolar surgical instruments**
Abstract Title: **Bipolar surgical instrument with assisted grip**

(57) A bipolar surgical instrument 1 comprises a body 2 and first and second opposed jaws located at the distal end of a shaft, movable between an open position in which the first and second jaws are spaced apart from one another, and a closed position. An actuation grip 8 is movably mounted on the body 2, is arranged to operate an actuation shaft, and is biased towards the open position by an actuation grip return force. An actuation assistor 60 is located in the body 2 of the instrument 1 and comprises an aperture 84 and a resiliently biased portion to engage the aperture 84 when the jaws are closed. This is arranged to hold the actuation grip 8 in the closed position with a predetermined force greater than zero and less than the actuation grip return force.

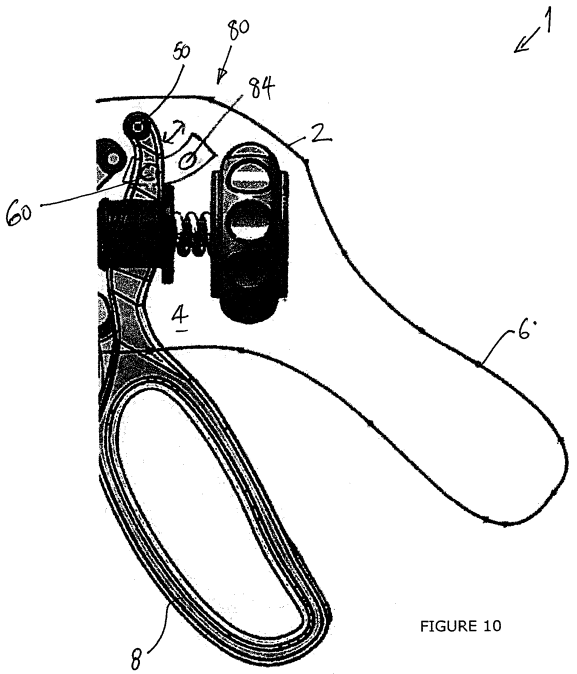


FIGURE 10

GB 2565132 A

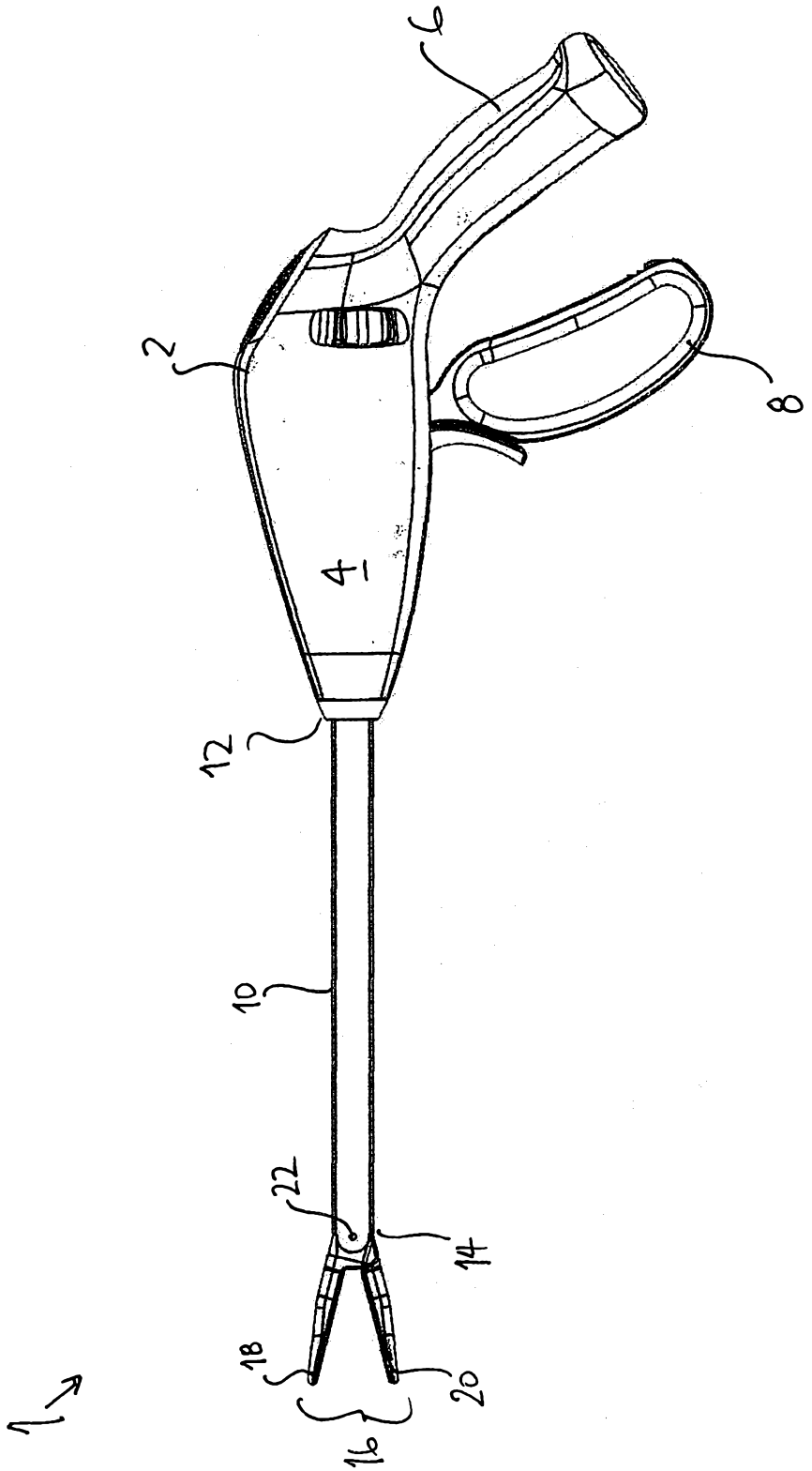


FIGURE 1

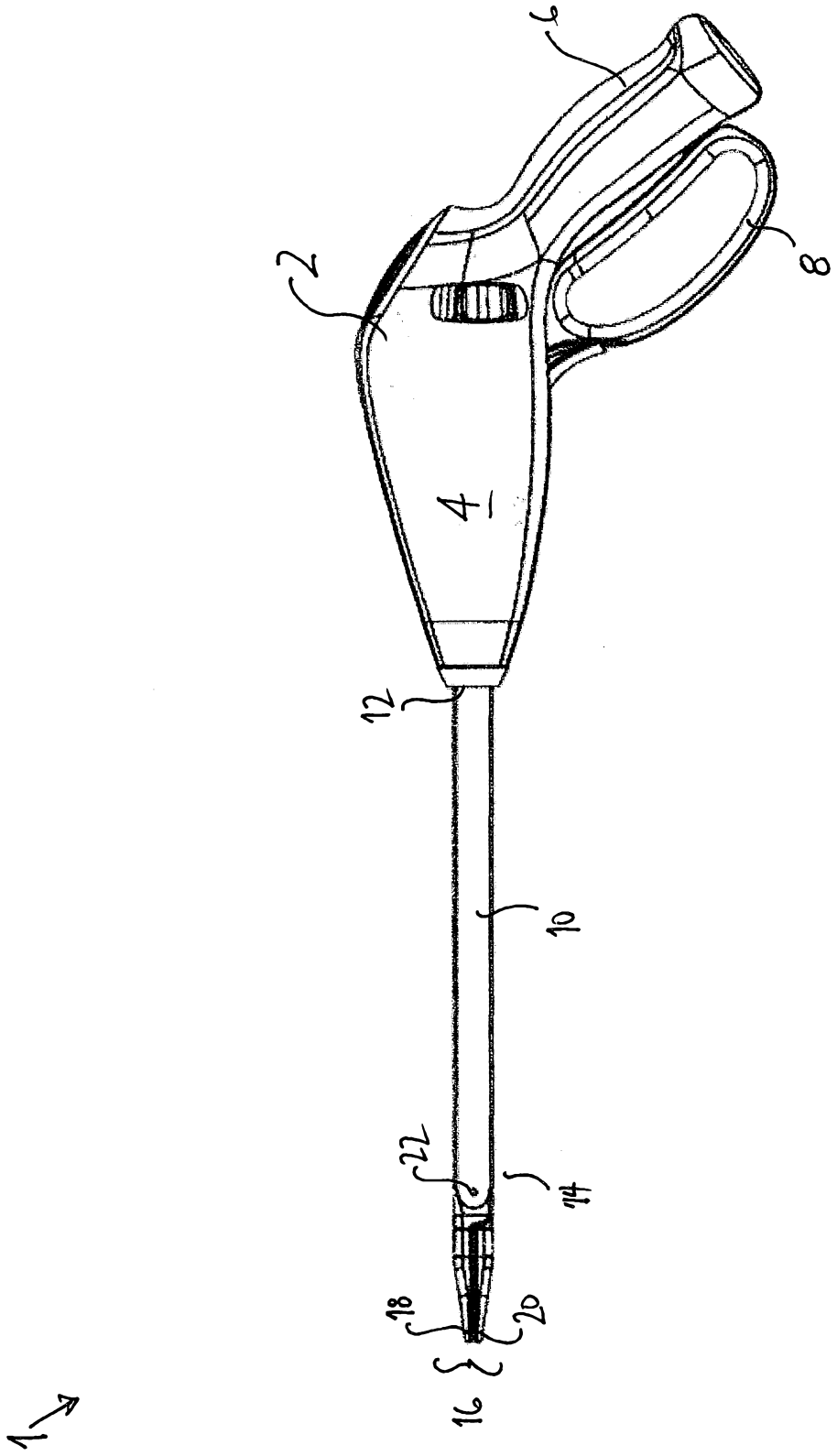


FIGURE 2

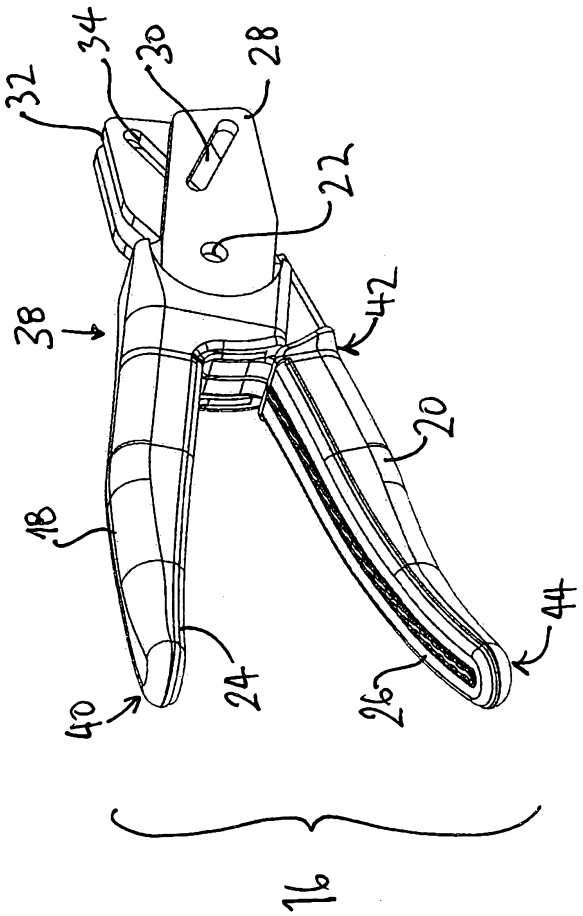


FIGURE 3

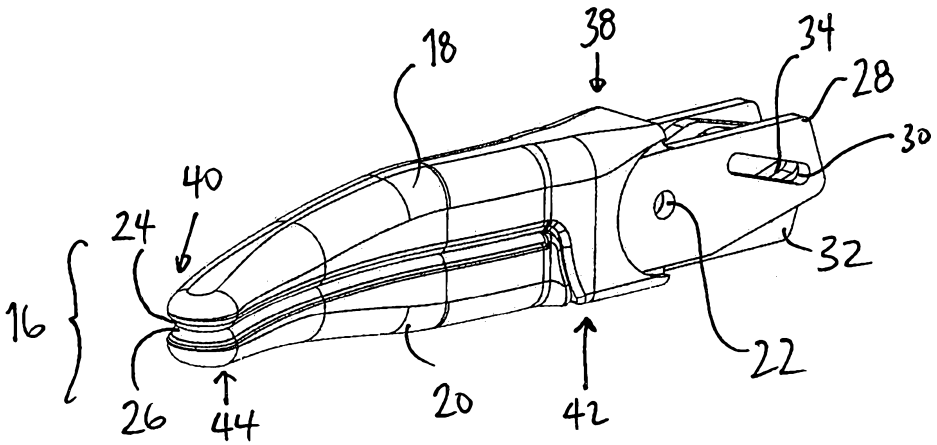


FIGURE 4

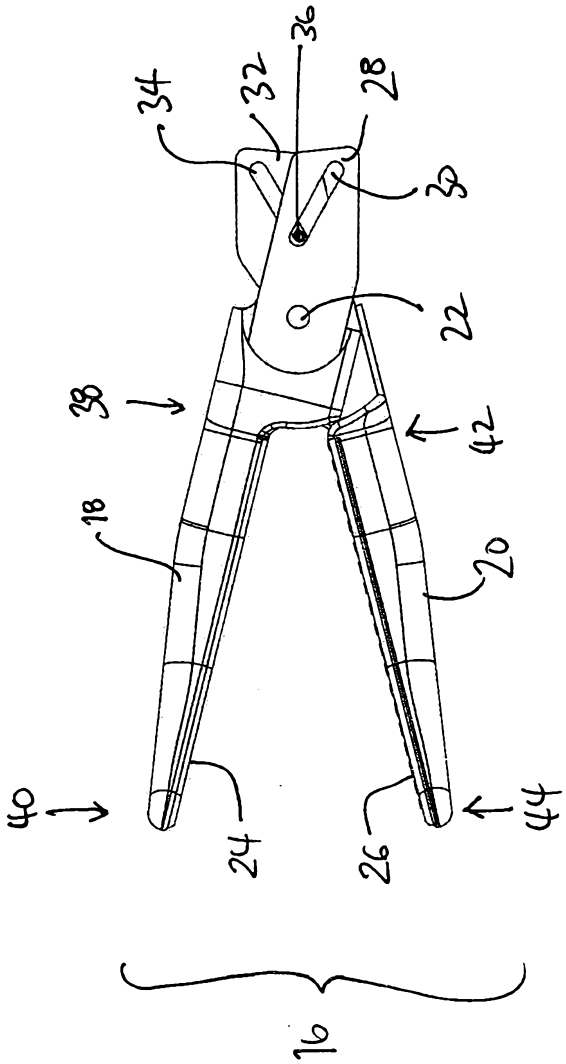


FIGURE 5

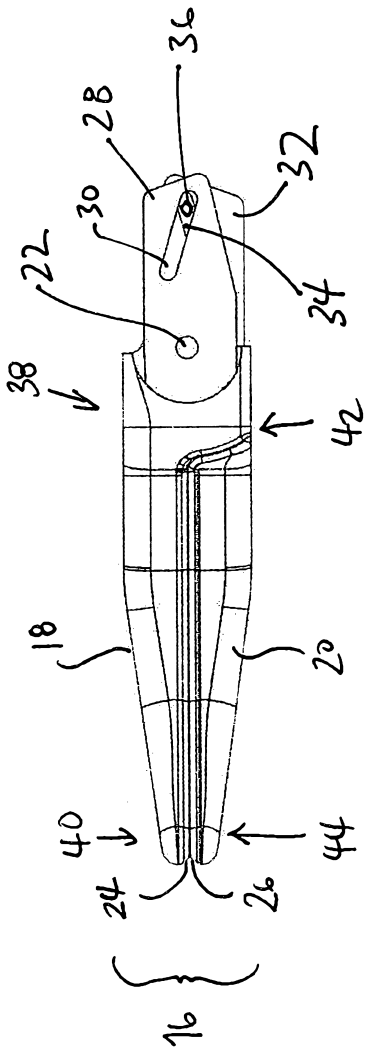


FIGURE 6

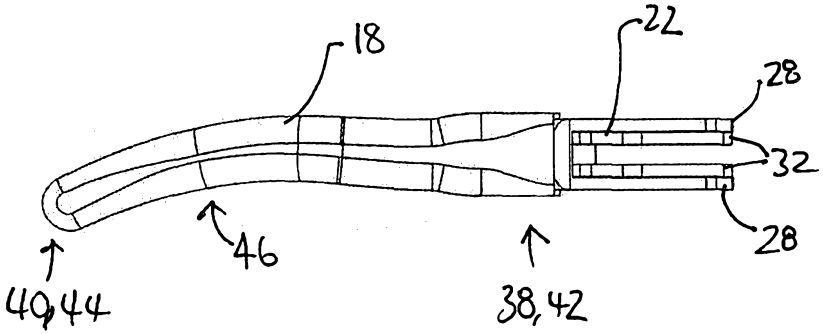


FIGURE 7

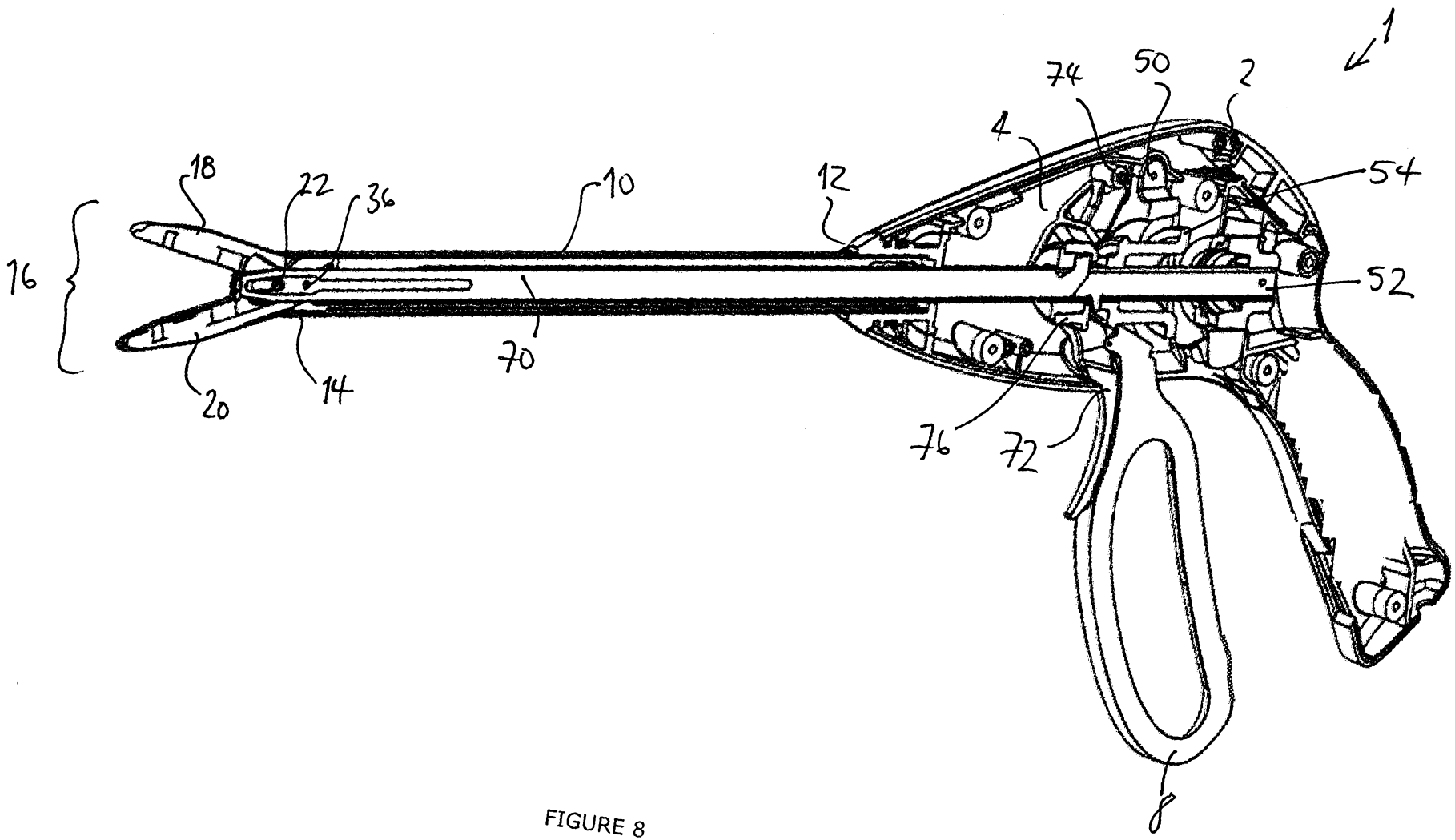


FIGURE 8

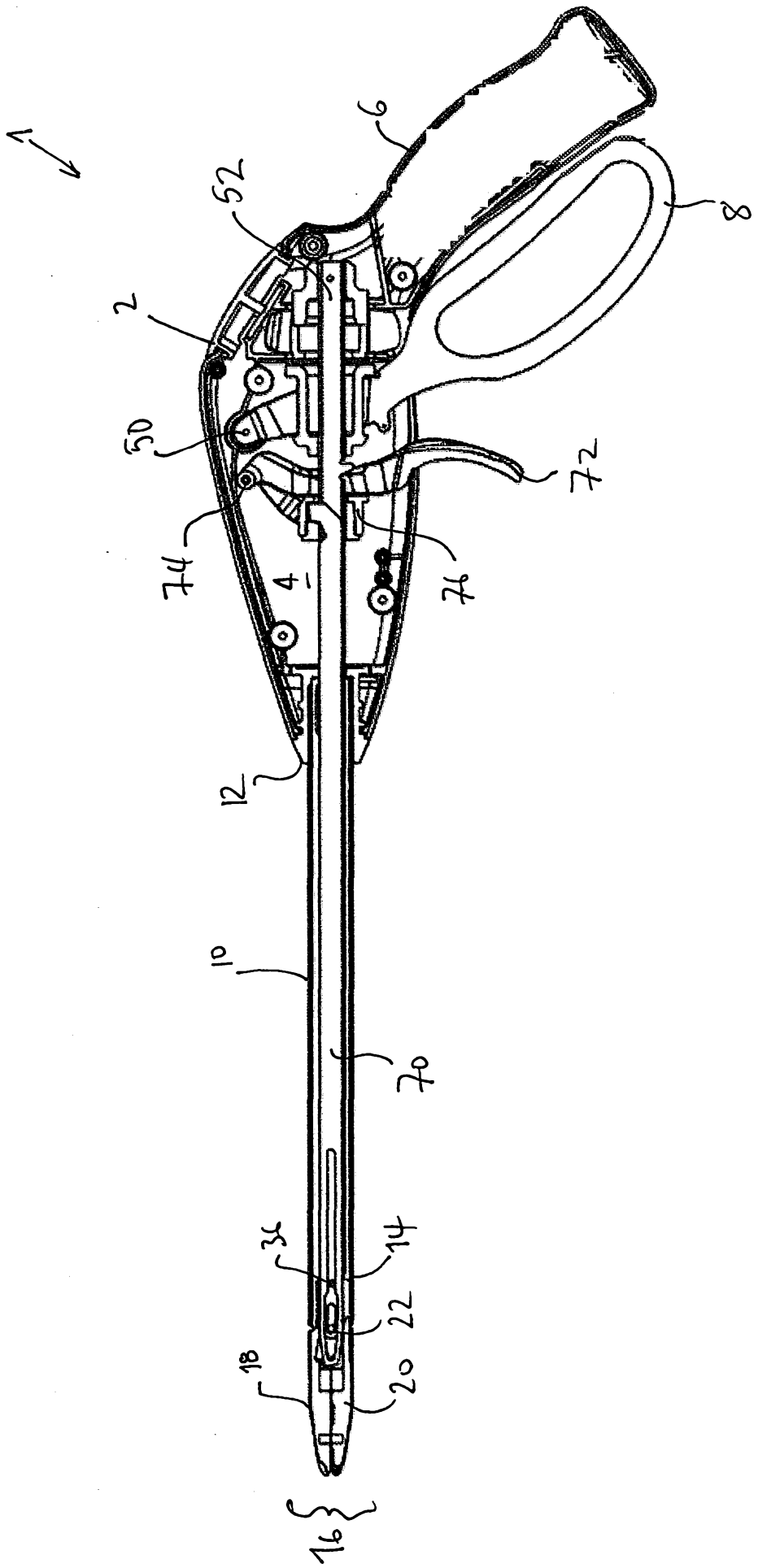


FIGURE 9

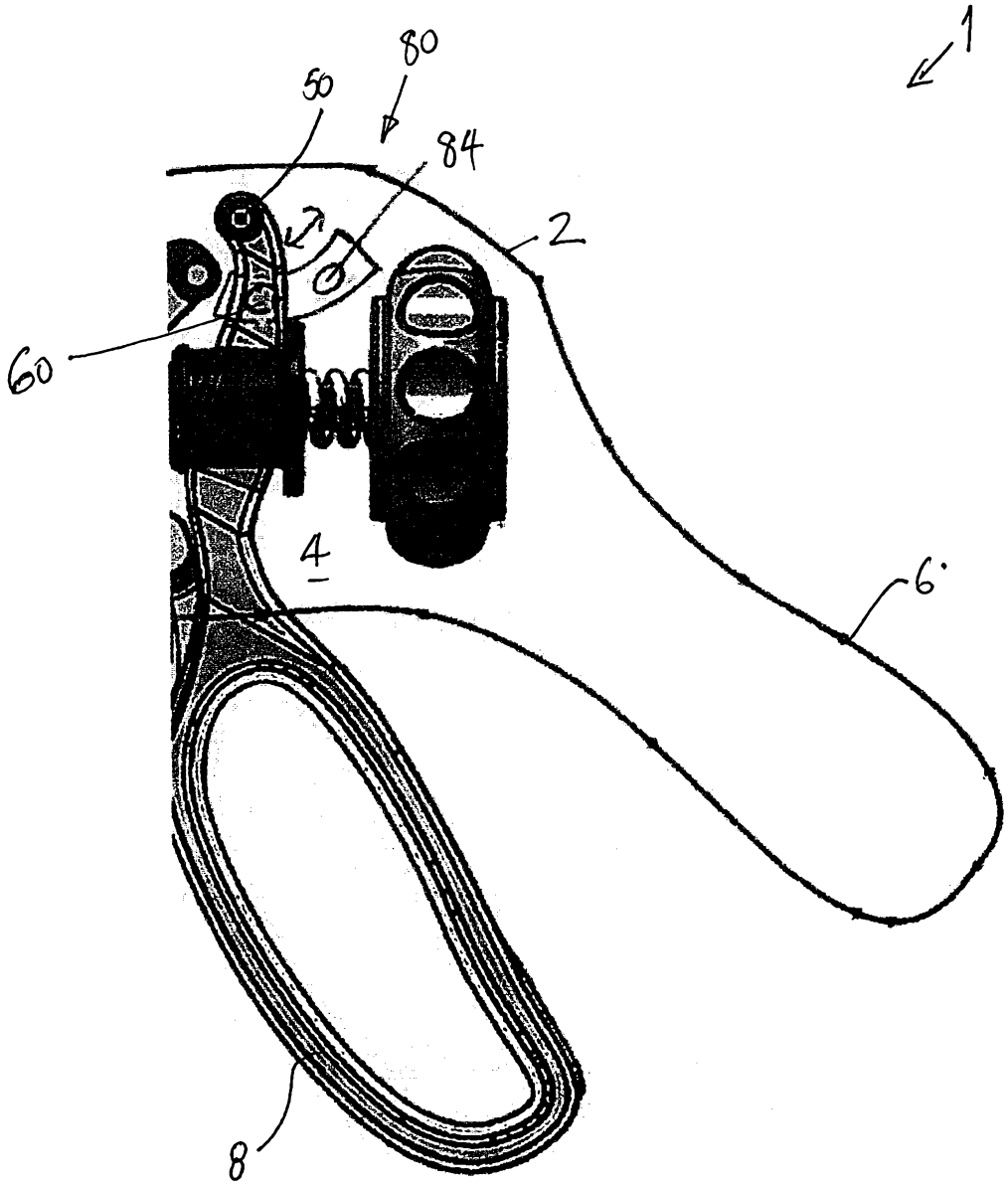


FIGURE 10

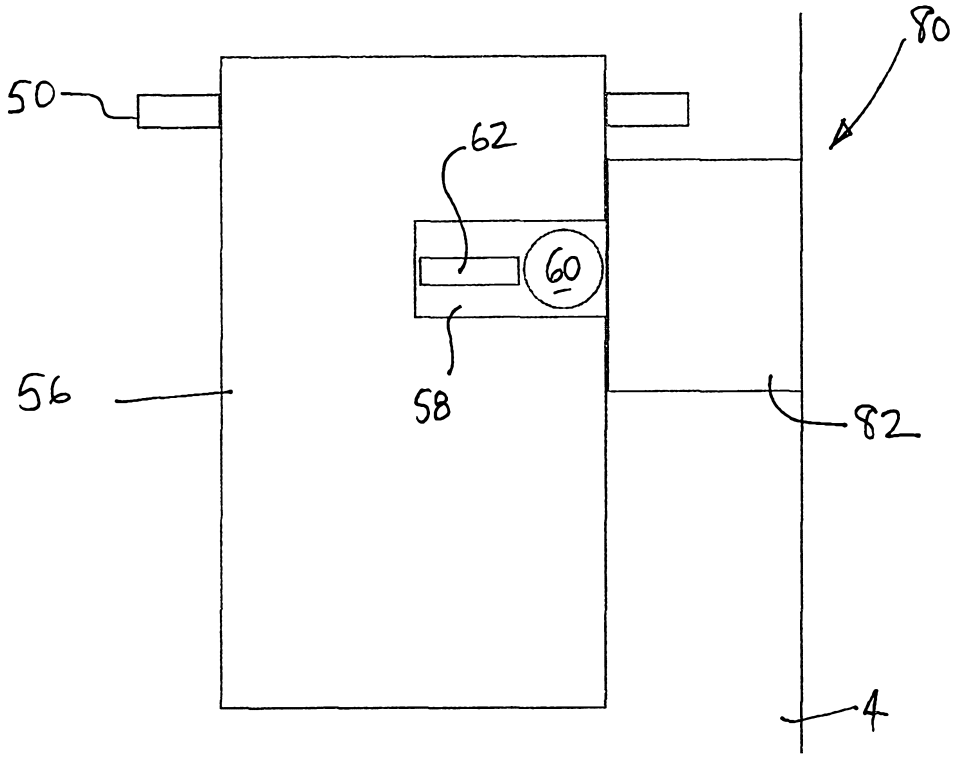


FIGURE 11

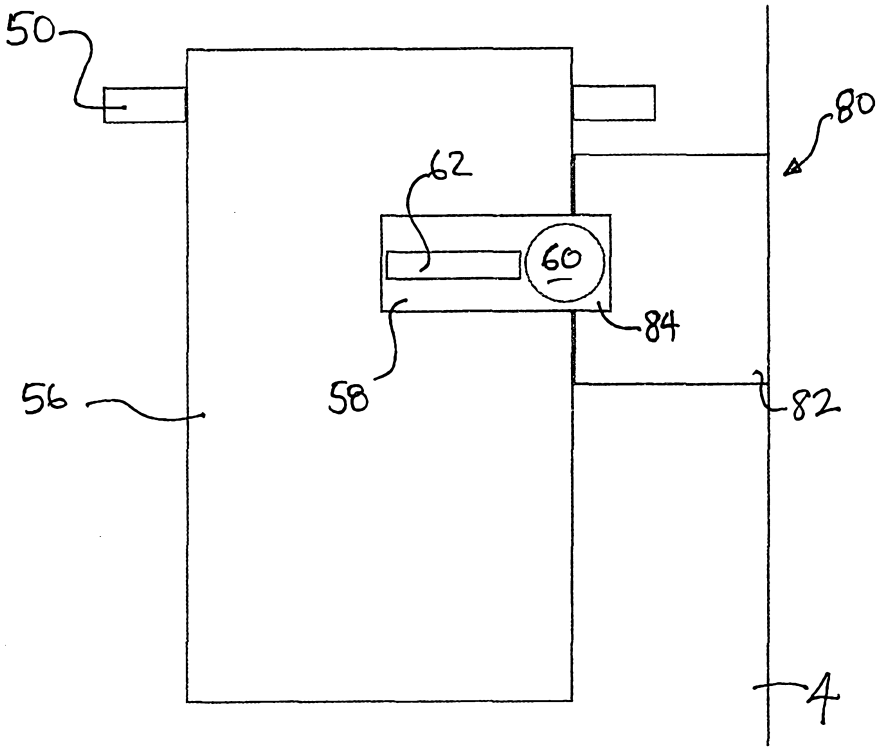


FIGURE 12

# BIPOLAR SURGICAL INSTRUMENTS

The present invention relates to bipolar surgical instruments.

## BACKGROUND OF THE INVENTION

Bipolar surgical instruments are used to clamp and seal tissue, particularly blood vessels, during surgical procedures. Clamping is typically achieved using a pair of opposed jaws that are remotely operable to clamp around the tissue being sealed. Sealing is typically achieved using application of radio frequency energy delivered to the tissue being sealed by electrodes mounted on the opposed jaws of the instrument.

In order to effectively seal a vessel using bipolar energy, it is advantageous for the force exerted by the jaws on the tissue to be substantially constant over the duration of the seal. This reduces the number of variables which the sealing waveform must overcome in order to provide a reliable seal. Existing devices, particularly which are used to seal large vessels, generally maintain this constant jaw force using a latch mechanism which is engaged once the jaw actuating handle is compressed to its maximum extent. The handle can then be released by the user while the jaw force remains in place. To release the latch, the handle is normally squeezed again, and the jaw force is removed. The disadvantage of this workflow is that the handle must be squeezed once to close jaws, and once again to release jaws. Some surgeons prefer to work without a latch, and some believe it is a faster way to work in certain situations. The problem with not having a latch mechanism is the variability in jaw clamping force over the duration of the seal, as this force is now reliant on the surgeon to maintain.

Therefore, it is desirable to provide a bipolar surgical instrument that is able to a constant jaw closure force during vessel sealing, without latching the handle in place.

## SUMMARY OF THE INVENTION

Aspects of the present invention are set out in the attached claims.

According to one exemplary aspect, there is provided a bipolar surgical instrument comprising a body; a fixed grip which extends from the body; an elongate shaft attached to the body, the shaft extending to a distal end; first and second opposed jaws located at the distal end of the shaft, the first jaw being movable with respect to the second jaw between an open position in which the first and second jaws are spaced apart from one another, and a closed position in which the first and second jaws are adjacent one another; an actuation

shaft connected with at least the first jaw, the actuation shaft being movable with respect to the body and the elongate shaft between a first position in which the jaws are in the open position, and a second position in which the jaws are in the closed position; an actuation grip pivotably mounted on the body, and arranged to operate the actuation shaft, the actuation grip having a released position in which the actuation shaft is in the first position, and an engaged position in which the actuation shaft is in the second position, the actuation grip being rotatable between the released and engaged positions; a bias element arranged to bias the actuation grip towards the released position with an actuation grip return force; and an actuation assistor located in the body and arranged to hold the actuation grip in the second position with a predetermined force greater than zero and less than the actuation grip return force, wherein the actuation assistor comprises a receiving aperture defined in a portion of a wall of the body, the portion of the wall of the body being adjacent part of the actuation grip; and an engagement portion attached to that part of the actuation grip adjacent the portion of the wall of the body, the engagement portion being resiliently biased towards the portion of the wall of the body, such that the engagement portion engages releasably with the receiving aperture when the actuation grip is in the engaged position.

**BRIEF DESCRIPTION OF THE DRAWINGS**

Figures 1 and 2 show side views of a bipolar surgical instrument embodying one aspect of the present invention in open and closed positions respectively;

Figures 3 and 4 show perspective views of part of the bipolar surgical instrument of Figures 1 and 2 in open and closed positions respectively;

Figures 5 and 6 show side views of the part of the bipolar surgical instrument of Figures 3 and 4 in open and closed positions respectively;

Figure 7 shows a plan view of the part of the bipolar surgical instrument of Figures 3 to 6;

Figure 8 shows a perspective cross-sectional view of the bipolar surgical instrument of Figures 1 and 2;

Figure 9 shows a side cross-sectional view of the bipolar surgical instrument of Figures 1 and 2;

Figure 10 is a side cross-sectional view of an actuation assistor for the instrument of Figures 1 and 2; and

Figures 11 and 12 illustrate open and closed positions of the actuation assistor of Figure 10.

**DETAILED DESCRIPTION OF THE PREFERRED EMBODIMENTS**

An example bipolar surgical instrument 1 is shown schematically in Figures 1 and 2. Figure 1 illustrates an open position of the instrument 1, and Figure 2 illustrates a closed position thereof.

The instrument 1 comprises a body 2 having a main housing 4 from which a fixed grip 6 extends. The fixed grip 6 is held during use by the operator of the instrument 1. A movable actuation grip 8 is movably mounted on the main housing 4 of the body 2. An elongate shaft 10 is attached to the main housing 4 of the body 2, and extends from a proximal end 12 at the main housing 4, to a distal end 14 of the shaft 10. The shaft 10 defines a longitudinal axis therealong, and an elongate passage extends from the proximal end 12 to the distal end 14 of the shaft 10. As will be described in more detail below, an actuation shaft extends from the main housing 4 through the passage of the shaft 10.

A pair 16 of opposed jaws are located at the distal end 14 of the shaft 10. The pair 16 of jaws comprises a first jaw 18 and a second jaw 20. In the example of Figures 1 and 2, the first and second jaws 18 and 20 are pivotally mounted on a jaw pivot 22. The first and second jaws 18 and 20 are pivotable about the jaw pivot 22, between an open position (as shown in Figure 1) in which the jaws 18 and 20 are separated from one another, and a closed position (as shown in Figure 2) in which the jaws 18 and 20 are adjacent one another. In another example of a bipolar instrument embodying the present invention, only one of the jaws is movable. In another example, the movable jaw or jaws may be movable in any suitable manner, for example linearly, or in a combination of rotation and linear movement. The exact nature of the movement of the jaws is not important in the context of the present invention.

As will be described in more detail below, the operator of the instrument 1 moves the actuation grip 8 from a first position (shown in Figure 1) to a second position (shown in Figure 2) in order to move the jaws 18 and 20 from the open position to the closed position. During an operation, tissue to be sealed is held between the jaws in the closed position for a predetermined time period, with pressure applied by the operator. In an embodiment of the present invention, the pressure exerted by the jaws on the tissue to be sealed is maintained using an actuation assistor.

Figures 3 to 7 illustrate the pair 16 of jaws 18 and 20. Figures 3 and 4 are perspective views of the jaws 18 and 20 in open and closed positions respectively, and Figures 5 and 6 are side views of the jaws 18 and 20, again in the open and closed positions respectively. Figure 7 shows a plan view of the jaws 18 and 20. The first jaw 18 extends from a proximal end 38 thereof to a distal end 40 thereof. Similarly, the second jaw 20 extends from a proximal end 42 thereof to a distal end 44 thereof.

The first and second jaws 18 and 20 have respective inner surfaces which face one another. The first jaw 18 carries a first electrode 24 on the inner surface thereof, and the second jaw 20 carries a second electrode 26 on the inner surface thereof. In the open position shown in Figures 3 and 5, the first and second electrodes 24 and 26 are spaced apart from one another. In the closed position shown in Figure 4 and 6, the first and second electrodes 24 and 26 are adjacent one another. Each of the first and second electrodes 24 and 26 may be provided by a single electrode, or by any suitable arrangement of a plurality of electrodes.

From the proximal end 38 of the first jaw 18 extends a first actuation member 28 which defines a first actuation slot 30. From the proximal end 42 of the second jaw 20 extends a second actuation member 32 which defines a second actuation slot 34. In the example shown, the first actuation member 28 extends outwardly of the second actuation member 32. The first and second actuation slots 30 and 34 are arranged to overlap one another, and extend at acute angles with respect to the longitudinal axis.

A jaw actuation pin 36 extends through the first and second actuation slots 30 and 34 of the first and second actuation members 28 and 32. The actuation pin 36 engages with the actuation members 28 and 32 in slidable contact. The actuation pin 36 is movable from a first position as shown in Figures 3 and 5 to a second position as shown in Figures 4 and 6. The first position of the actuation pin 36 corresponds to the open position of the jaws 18 and 20, and the second position of the actuation pin 36 corresponds to the closed position of the jaws 18 and 20. The actuation pin 36 is movable longitudinally with respect to the jaws 18 and 20 and the shaft 10 of the instrument 1. The movement of the actuation pin 36 within the first and second actuation slots 30 and 34 causes the jaws 18 and 22 rotate about the jaw pivot point 22. The actuation pin 36 engages with the actuation members 28 and 32 and drive those members between the open and closed positions. Moving the actuation pin 36 from the first position to the second position moves the jaws 18 and 20 from the open position to the closed position. Moving the actuation pin 36 from the second position to the first position moves the jaws 18 and 20 from the closed position to the open position.

Figure 7 illustrates the jaws 18 and 20 in plan view. As can be seen from Figure 7 the jaws extend from the proximal end 38, 42 to the distal end 40, 44, with a curved portion 46. The curved portion 46 curves to one side of a plane in which the actuation members 28 and 32 move. The curved portion 46, as is well known and understood, provides the operator of the instrument 1 with improved usability.

Figures 8 and 9 illustrate respective perspective and side cross-sectional views of the instrument of Figures 1 and 2. Figure 8 illustrates the instrument 1 in the open position, and Figure 9 illustrate the instrument 1 in the closed position. The main housing 4 of the instrument 1 provides an actuation grip pivot 50 on which the actuation grip 8 is mounted. The actuation grip 8 is able to rotate about the actuation grip pivot 50 under the control of the operator between the open and closed positions of the instrument 1. The actuation grip 8 is biased towards the open position by a resilient bias means, such as a spring. An actuation shaft 52 extends from the main housing 4 along the elongate shaft 10, through the passage therein, to the first and second jaws 18 and 20 at the distal end of the elongate shaft 10. The actuation pin 36 is provided at attached to the distal end of the actuation shaft 52. The actuation pin engages with the actuation slots of the first and second jaws 18 and 20, as described above, and is used to move the jaws 18 and 20 between the open and closed positions.

In addition to the actuation shaft 52, a blade 70 extends through the elongate shaft 10 from the main housing for of the instrument 1 to the distal end of the elongate shaft 10. A blade actuator 72 is rotatably mounted on a blade actuator pivot 74 located in the housing 4. The blade actuator 72 is attached to the blade 70 by means of a blade with tension portion 76, such that rotation of the blade actuator causes linear movement of the blade 70 along the longitudinal axis of the elongate shaft 10. The blade will be described in more detail below.

In operation, the operator of the instrument 1 holds the fixed grip 6 in order to position the jaws 18 and 20 at the appropriate point around the vessel to be sealed. The operator squeezes the actuation grip 8 in order to close the jaws 18 and 20 around the vessel to be sealed. The action of squeezing the actuation grip 8 causes the actuation grip 8 to rotate about the actuation grip pivot 50, thereby moving the shaft retention portion 54 along the longitudinal axis of the instrument 1 in a direction away from the distal end of the elongate shaft 10. This movement of the shaft retention portion 54 causes the actuation shaft 52 to move in a direction away from the distal end of the elongate shaft 10. The actuation pin 36 engages the actuation slots 28 and 34, thereby causing the jaws 18 and 20 to rotate into the closed position.

Whilst in the closed position, suitable electrical energy is supplied to the electrodes carried by the first and second jaws 18 and 20, so as to seal the vessel being gripped by the jaws 18 and 20. Once sealing has occurred, the actuation grip 8 can be moved by the operator to the open position so as to release the jaws 18 and 20 from around the vessel being sealed, thereby releasing at vessel.

Figures 10 to 12 illustrate an embodiment of the present invention which includes an actuation assistor 80 for the actuation grip 8 which removes the need for a double action when releasing the jaws 18 and 20 from the closed position. Figure 10 and 11 illustrate the embodiment in the open position, and Figure 12 illustrates the embodiment in the closed position. The embodiment provides resilience between an engagement member 60 of the actuation grip 8 and the actuation assistor 80.

The actuation arm 8 has an upper portion 56 which is pivotably attached to the pivot 50. The upper portion 56 defines a slot 58 in which the engagement member 60 is located. The engagement member 60 is attached to the upper portion 56 by way of a resilient member 62, such as a spring or a resilient plastics member, which serves to bias the engagement member 60 out of the slot 58.

The actuation assistor 80 is located on a side wall of the main housing 4 of the instrument 1, and includes a body portion 82 which extends from the side wall, and which defines a receiving aperture 84. The receiving aperture 84 is arranged to receive the engagement member 60 when the actuation grip 8 is in the closed position.

The actuation grip 8 is then able to be held in the closed position with a reaction force on the hand lower than that required to engage the jaws at the required closing force. The additional force provided by the engagement of the engagement portion 60 with the body portion 82 of the actuation assistor 80 enables the desired closing force to be maintained. However, the operator of the instrument is able to relax their grip of the actuation arm 8 slightly. Such relaxation enables the operator to use the instrument in the closed position for longer, and also ensures that the force applied to the tissue between the jaws is unchanged during the vessel sealing operation. The engagement portion 60 is not, however, latched into place.

When releasing the instrument from the closed position to the open position, the actuation grip 8 is biased towards the open position by a resilient bias means, and this resilient bias means overcomes the force holding the engagement member 60 within the receiving aperture 84, thereby allowing the instrument 1 to return to the open position.

Accordingly, an embodiment of the present invention are able to provide bipolar surgical instruments is able to provide a constant jaw closure force during vessel sealing without the need to latch the handle in place and thus requiring a two-stage release process.

**CLAIMS:**

1. A bipolar surgical instrument comprising:

a body;

a fixed grip which extends from the body;

an elongate shaft attached to the body, the shaft extending to a distal end;

first and second opposed jaws located at the distal end of the shaft, the first jaw being movable with respect to the second jaw between an open position in which the first and second jaws are spaced apart from one another, and a closed position in which the first and second jaws are adjacent one another;

an actuation shaft connected with at least the first jaw, the actuation shaft being movable with respect to the body and the elongate shaft between a first position in which the jaws are in the open position, and a second position in which the jaws are in the closed position;

an actuation grip pivotably mounted on the body, and arranged to operate the actuation shaft, the actuation grip having a released position in which the actuation shaft is in the first position, and an engaged position in which the actuation shaft is in the second position, the actuation grip being rotatable between the released and engaged positions;

a bias element arranged to bias the actuation grip towards the released position with an actuation grip return force; and

an actuation assistor located in the body and arranged to hold the actuation grip in the second position with a predetermined force greater than zero and less than the actuation grip return force, wherein the actuation assistor comprises:

a receiving aperture defined in a portion of a wall of the body, the portion of the wall of the body being adjacent part of the actuation grip;

an engagement portion attached to that part of the actuation grip adjacent the portion of the wall of the body, the engagement portion being resiliently

biased towards the portion of the wall of the body, such that the engagement portion engages releasably with the receiving aperture when the actuation grip is in the engaged position.

Intellectual Property Office

| | | | |
|---|---|---|---|
| **Application No:** | GB1712539.4 | **Examiner:** | Dr Joanna Manning |
| **Claims searched:** | 1 | **Date of search:** | 14 February 2018 |

# Patents Act 1977: Search Report under Section 17

**Documents considered to be relevant:**

| Category | Relevant to claims | Identity of document and passage or figure of particular relevance |
|---|---|---|
| A | - | GB 2546626 A (GYRUS MEDICAL LTD) Whole document relevant, see especially Figures 26a-f |
| A | - | WO 2015/175298 A2 (GYRUS ACMI INC D B A OLYMPUS SURGICAL) Whole document relevant, see especially Figures 29-31 |
| A | - | US 2007/173814 A1 (TYCO HEALTHCARE) Whole document relevant, see especially Figures 5a-d |
| A | - | US 2009/248020 A1 (APPLIED MED RESOURCES) Whole document relevant, see especially Figures 42a and b |
| A | - | US 2002/188294 A1 (SHERWOOD SERV AG) Whole document relevant, see especially Figures 11 and 31 |

Categories:

| | | | |
|---|---|---|---|
| X | Document indicating lack of novelty or inventive step | A | Document indicating technological background and/or state of the art. |
| Y | Document indicating lack of inventive step if combined with one or more other documents of same category. | P | Document published on or after the declared priority date but before the filing date of this invention. |
| & | Member of the same patent family | E | Patent document published on or after, but with priority date earlier than, the filing date of this application. |

**Field of Search:**

Search of GB, EP, WO & US patent documents classified in the following areas of the UKC$^{X}$ :

Worldwide search of patent documents classified in the following areas of the IPC

A61B

The following online and other databases have been used in the preparation of this search report

EPODOC, WPI

**International Classification:**

| Subclass | Subgroup | Valid From |
|---|---|---|
| A61B | 0017/29 | 01/01/2006 |