(No Model.)

W. C. FLANNERY.

NON-REFILLABLE BOTTLE.

No. 590,259. Patented Sept. 21, 1897.

Fig. 1.

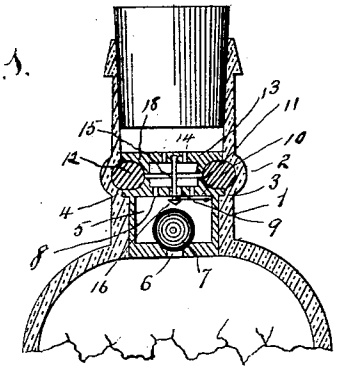

Fig. 2.

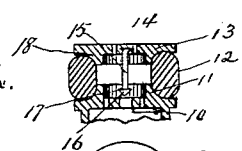

Fig 3.

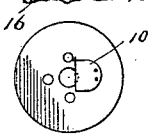

Witnesses
W. D. Stewart
Jos. Lentzen

William C. Flannery Inventor

Edward F. Neave, Attorney

THE NORRIS PETERS CO., PHOTO-LITHO., WASHINGTON, D. C.

UNITED STATES PATENT OFFICE.

WILLIAM C. FLANNERY, OF WASHINGTON, DISTRICT OF COLUMBIA, ASSIGNOR OF TWO-THIRDS TO FRED R. JEKYLL, OF WICHITA, KANSAS, AND WILLIAM F. FUQUA, OF BATON ROUGE, LOUISIANA.

NON-REFILLABLE BOTTLE.

SPECIFICATION forming part of Letters Patent No. 590,259, dated September 21, 1897.

Application filed March 25, 1897. Serial No. 629,266. (No model.)

To all whom it may concern:

Be it known that I, WILLIAM C. FLANNERY, a citizen of the United States, residing at Washington, in the District of Columbia, have invented certain new and useful Improvements in Non-Refillable Bottles, of which the following is a specification, reference being had therein to the accompanying drawings.

This invention relates to means for preventing the refilling of bottles after they have been emptied, and has for its object to provide a simple, cheap, readily-constructed, and perfectly-operating attachment which may be inserted in the bottle after the same has been filled, which will not restrict the delivery of the liquid, and will render it practically impossible to refill the bottle after the same has been emptied or to adulterate its contents by removing a portion of the liquid and substituting that of an inferior quality.

In describing my invention I will make use of the accompanying drawings, in which—

Figure 1 is a sectional view of a bottle-neck containing my invention. Figs. 2 and 3 are details thereof.

In my invention 1 represents the neck of the bottle, in which is blown an annular bead or projecting recess 2, having a ledge or shoulder 3, upon which rests the projecting annular flange 4 of the cylindrical valve-box 5, preferably made of metal. In the bottom of the box 5 is the opening 6, covered by the valve-ball 7, preferably made of glass or crystal. In the top of the box 5 are several openings 8 and a central opening 9, below which is the resilient spring 10, secured in place by solder or other means. Upon the top face of the box 5 is an annular flange 11, projecting upward and adapted to sustain the rubber gasket 12 in near proximity to the before-mentioned recess 2. A fastening-disk 13 is provided with several openings 14 and upon its under face a stem 15, with point 16 and annular spur 17, which when said disk is pressed downward with sufficient force is adapted to pass the spring 10 and to be held securely by it. The disk 13 is provided upon its under face with an annular flange 18, similar to flange 11, and the result of the described pushing downward is to compress the gasket 12 and force it into the recess 2. This operates to lock the entire device into its place within the bottle. An ordinary cork may be inserted in the neck above the antirefilling device.

Having described my invention, I wish to secure in my Letters Patent and claim as follows, to wit:

In a non-refillable bottle, the annular recess in the neck thereof, a valve-box with a valve-protected opening in the bottom thereof, the perforations and annular projecting flange of the top of said valve-box, a disk with perforations and a projecting annular flange, a gasket of elastic material adapted to be held between the said flanges and between them and the recess in the neck, combined with a pendent stem secured to the fastening-disk described and having a spur at its free end, a hole in the top of the valve-box adapted to receive the said stem, and an engaging catch adapted to engage the spur of the stem and retain said stem securely in the said hole, all substantially as described.

In testimony whereof I affix my signature in presence of two witnesses.

WILLIAM C. FLANNERY.

Witnesses:
T. RUFFIN,
GUY LEE.