US 20080195126A1

(19) **United States**

(12) **Patent Application Publication**

(10) **Pub. No.: US 2008/0195126 A1**

(43) **Pub. Date: Aug. 14, 2008**

Solem

(54) **SUTURE AND METHOD FOR REPAIRING A HEART**

(76) Inventor: **Jan Otto Solem**, Stetten (CH)

Correspondence Address:
EDWARDS LIFESCIENCES CORPORATION
LEGAL DEPARTMENT, ONE EDWARDS WAY
IRVINE, CA 92614

(21) Appl. No.: **12/031,490**

(22) Filed: **Feb. 14, 2008**

Related U.S. Application Data

(60) Provisional application No. 60/889,921, filed on Feb. 14, 2007.

Publication Classification

(51) **Int. Cl.**
A61B 17/122 (2006.01)

(52) **U.S. Cl.** **606/155**

(57) **ABSTRACT**

Devices and methods for treating or repairing a heart are disclosed. The device includes at least one anchor configured to engage tissue of a heart and a thread or other elongate member adapted to be coupled to the anchor and secured to heart tissue. The anchor may be attached to papillary muscle tissue and an elongate member may be attached to a valve leaflet for creating artificial chordae tendinae, thereby treating mitral valve prolapse. In another application, multiple anchors may be deployed within a ventricle and the threads pulled together for reducing dilation of a ventricle. A locking mechanism is provided for capturing and locking the threads together, thereby maintaining the ventricle in the reshaped condition.

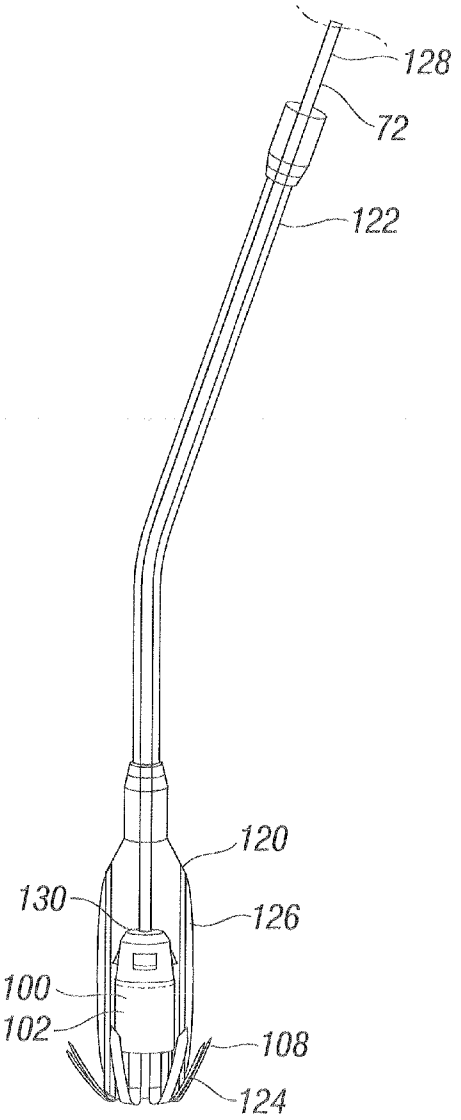

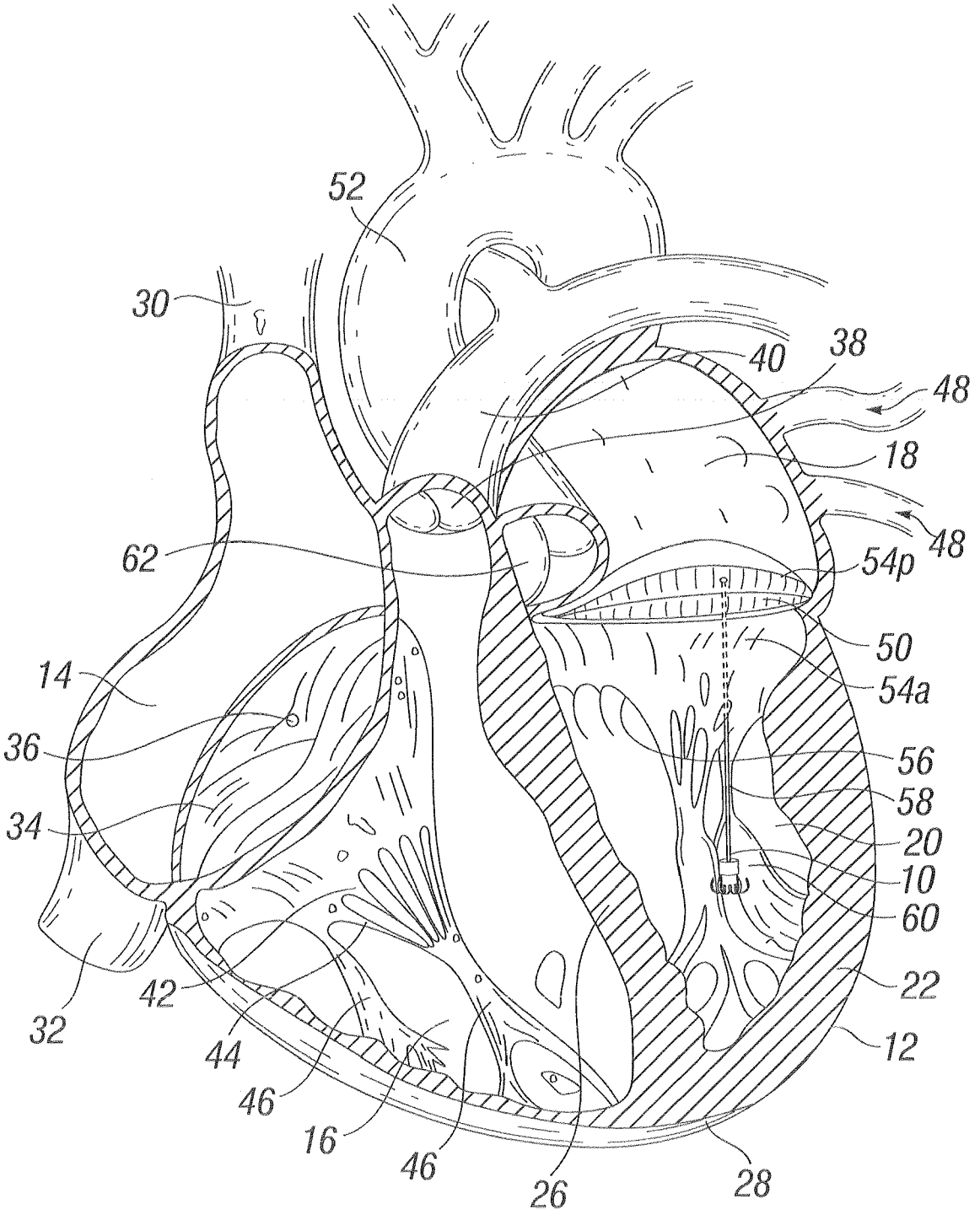
52
30
40
38
48
18
48
62
54p
50
14
54a
36
56
58
34
20
10
60
22
42
32
44
12
46
16
46
26
28

Fig. 1

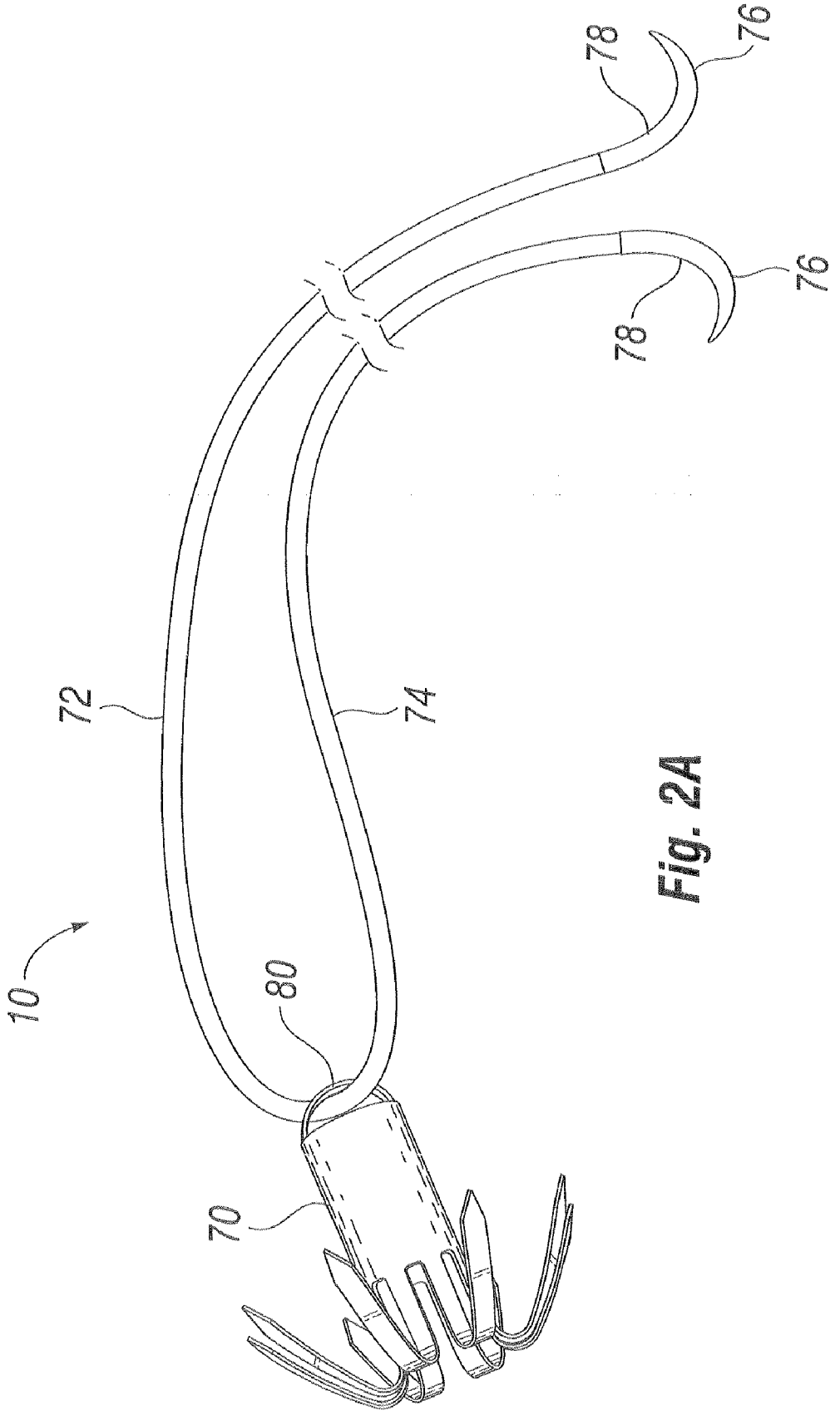

Fig. 2A

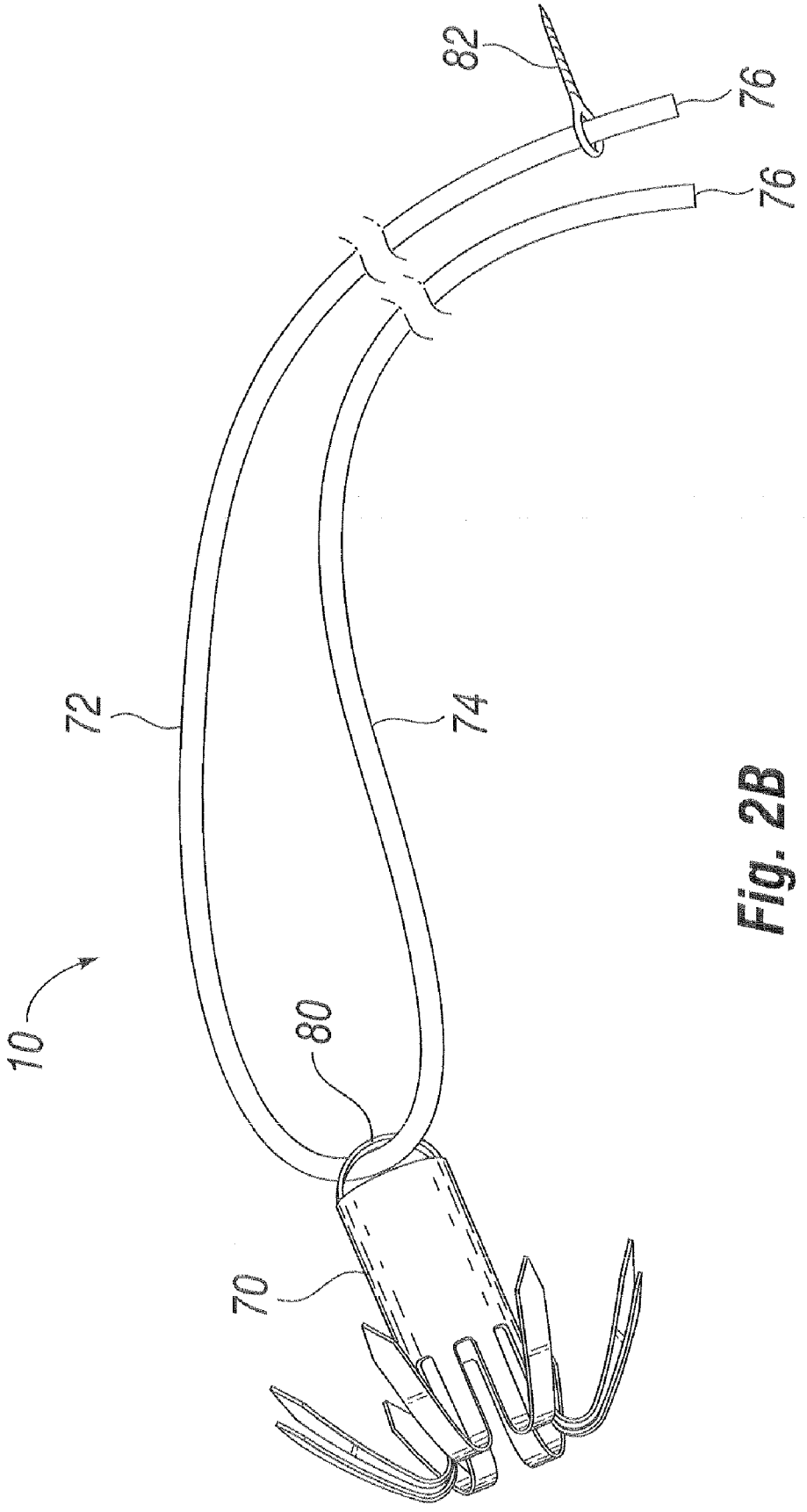

Fig. 2B

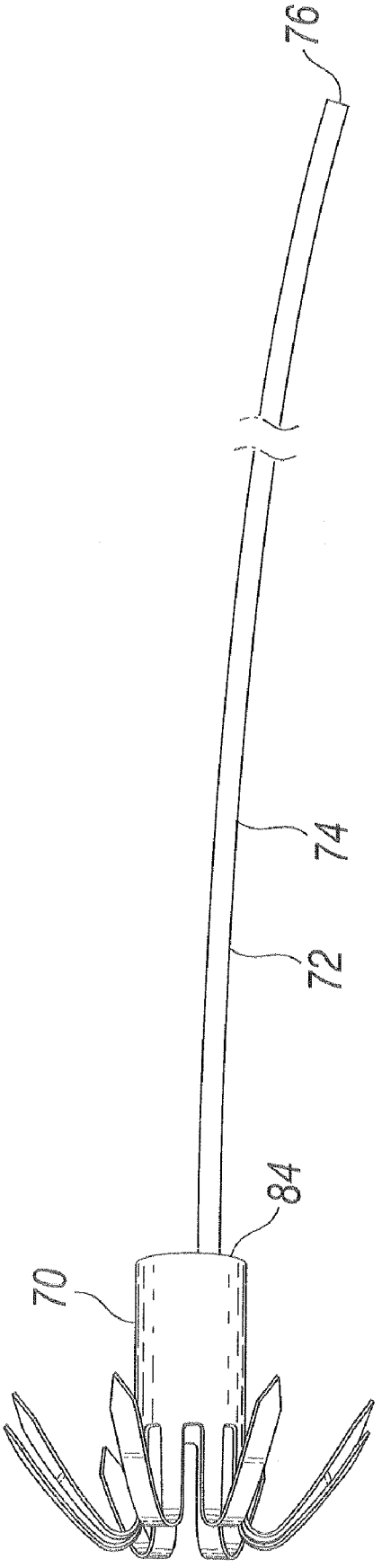

Fig. 2C

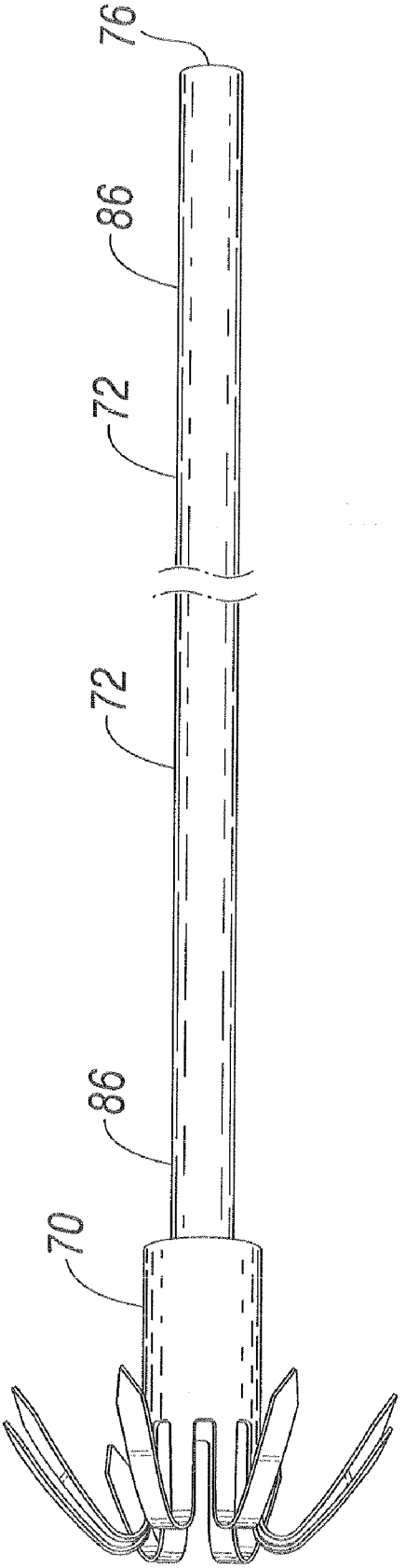

Fig. 3A

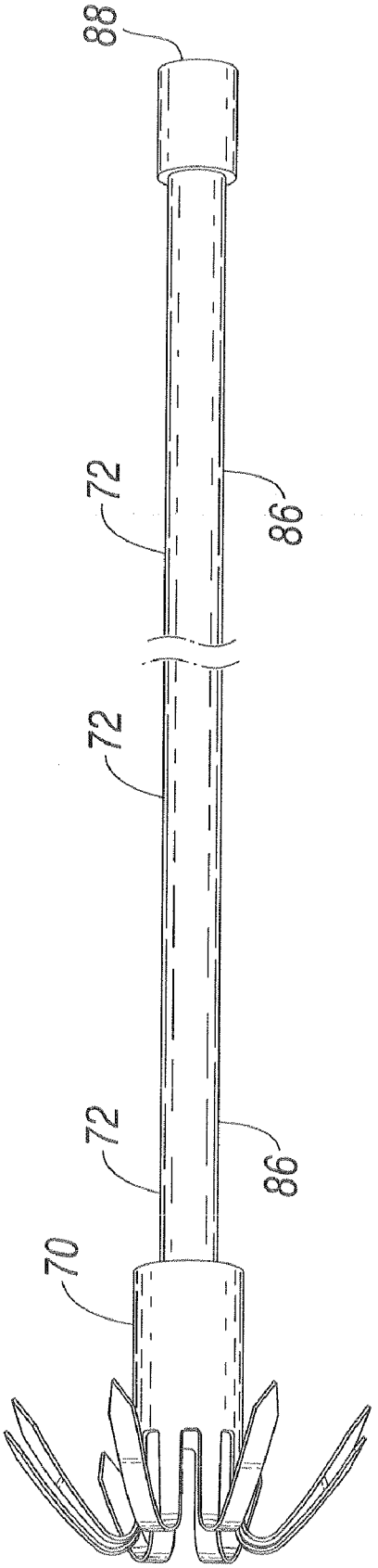

Fig. 3B

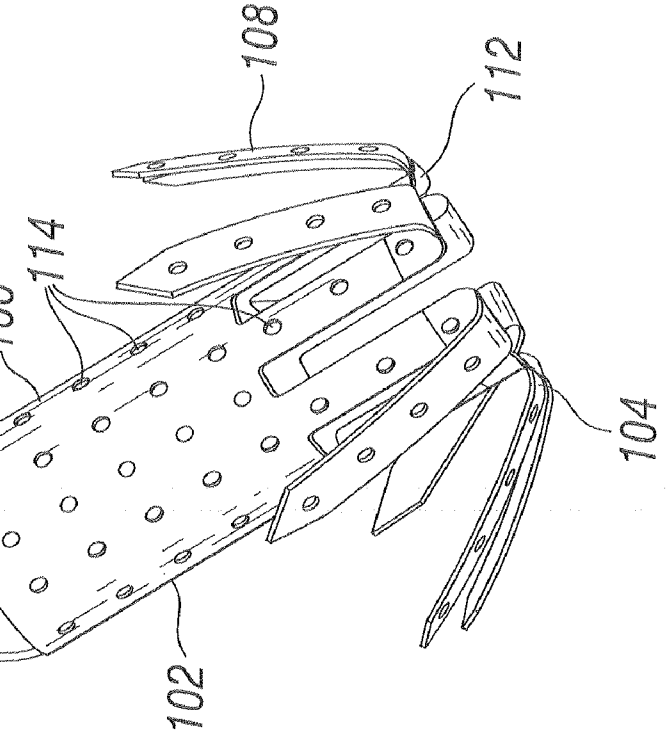

Fig. 4B

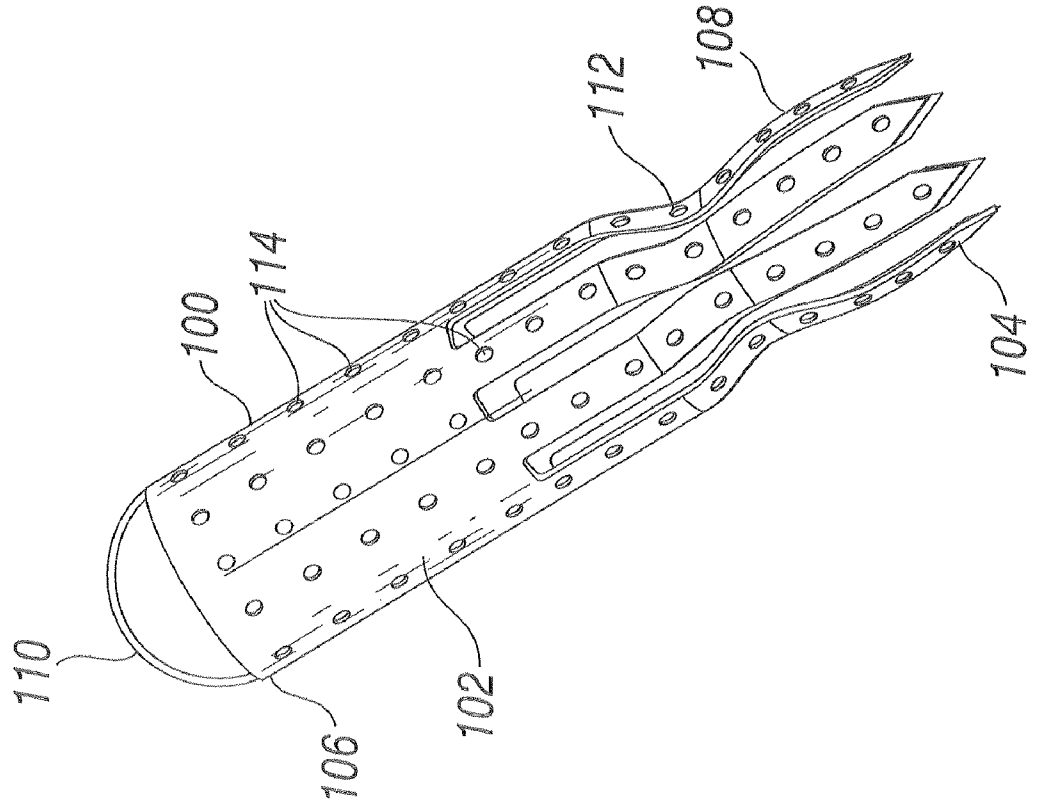

Fig. 4A

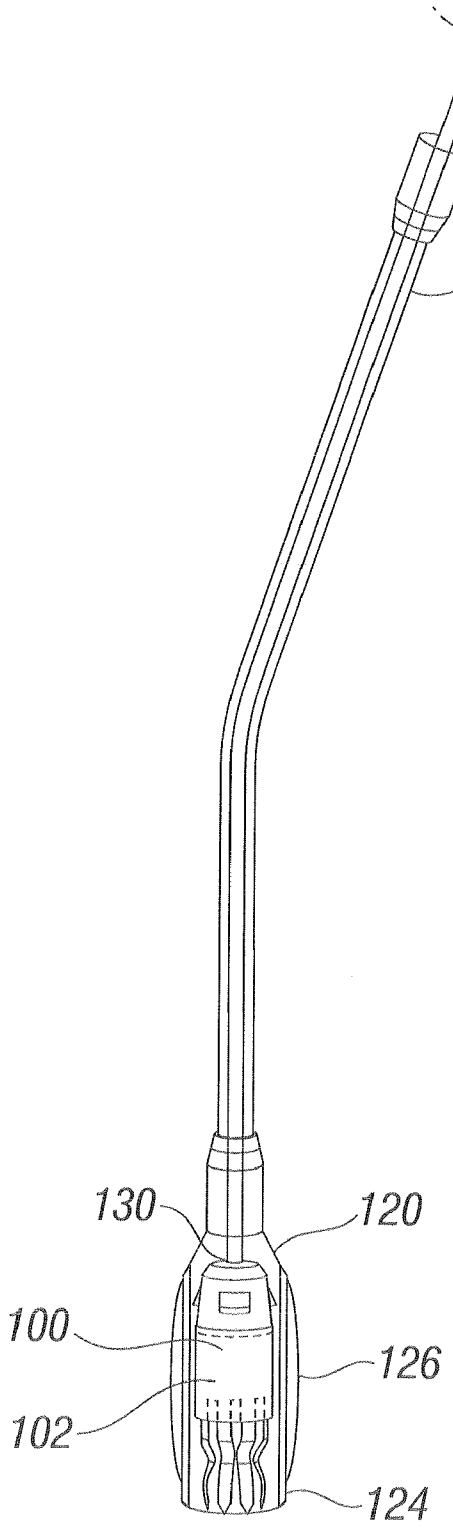
128
72
122
130
120
100
126
102
124

Fig. 5A

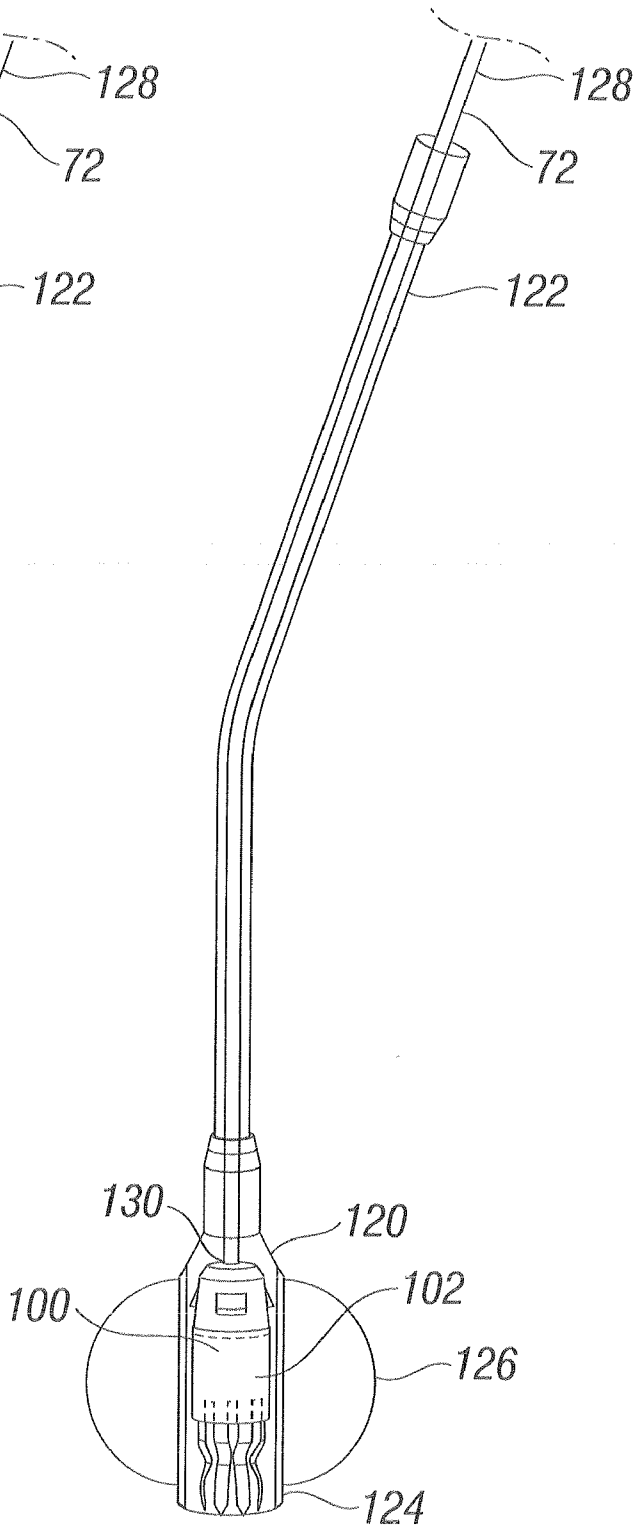
128
72
122
130
120
102
100
126
124

Fig. 5B

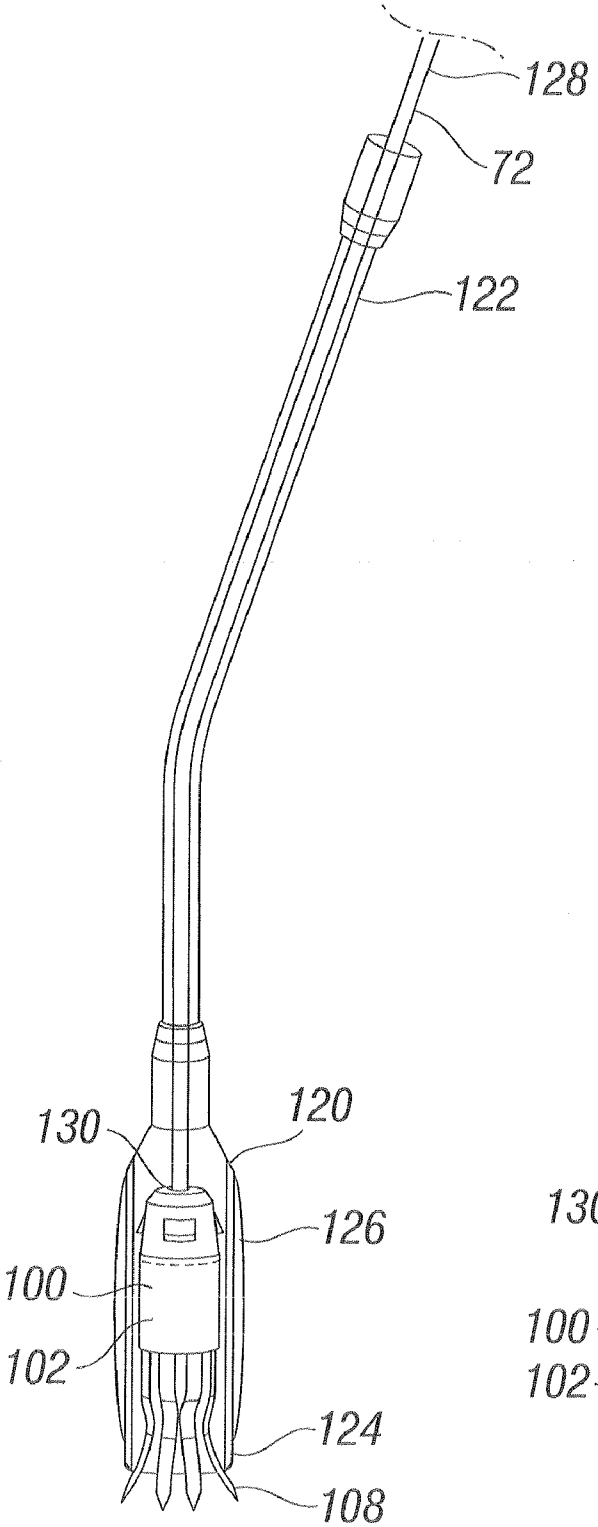
128
72
122
130
120
126
100
102
124
108

Fig. 5C

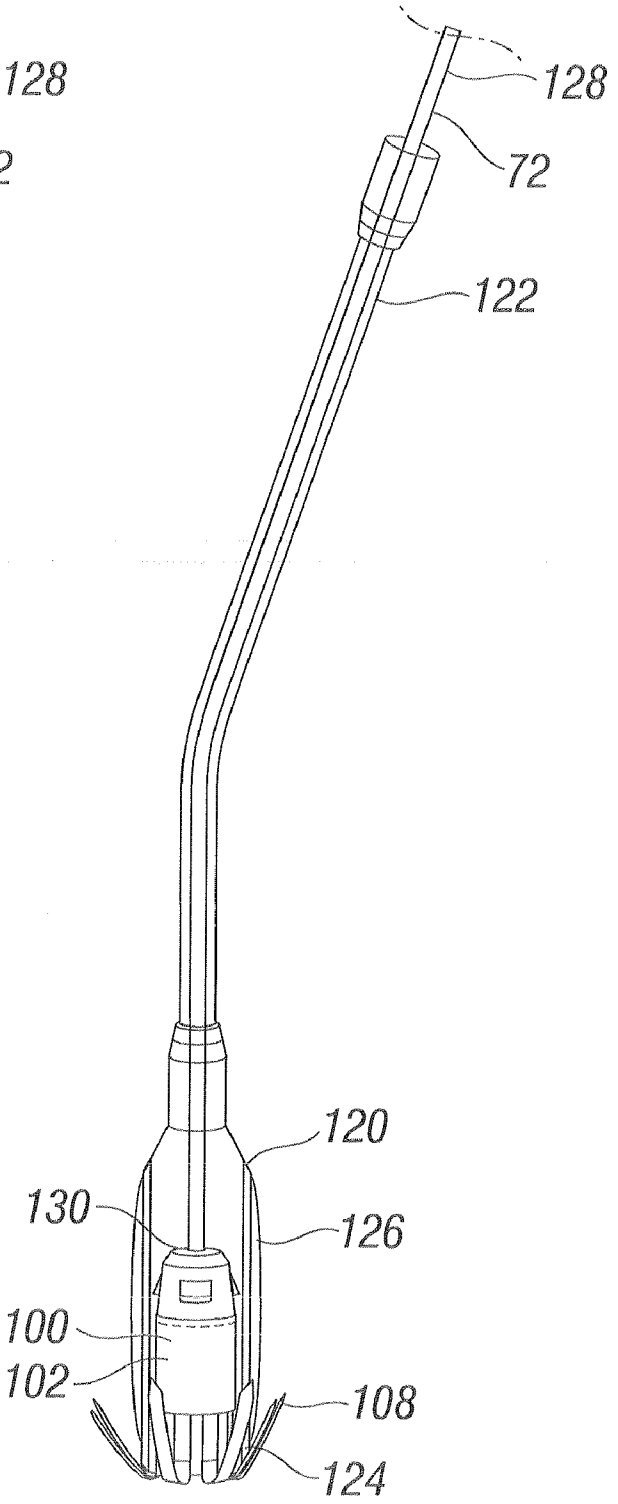
128
72
122
120
130
126
100
102
108
124

Fig. 5D

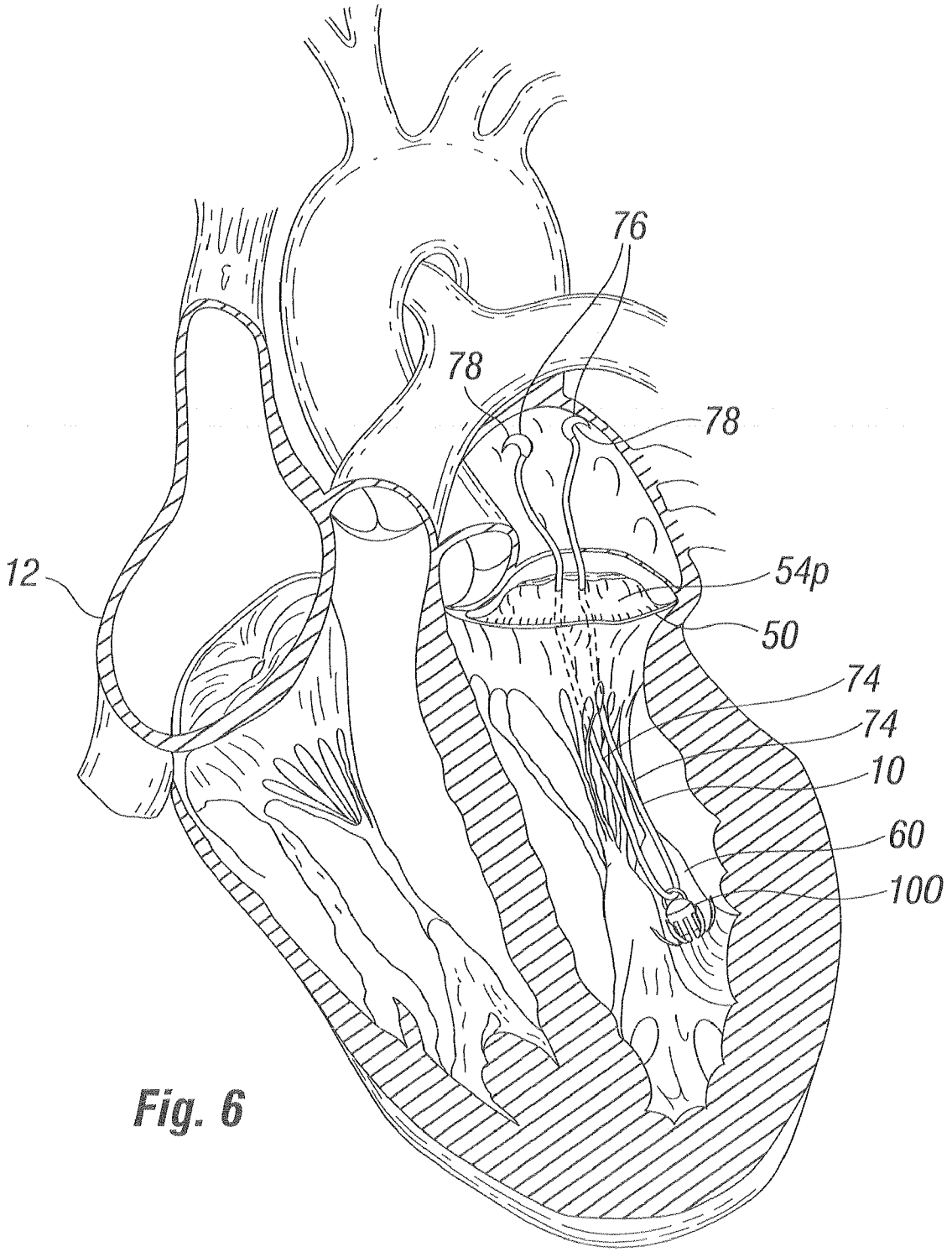

Fig. 6

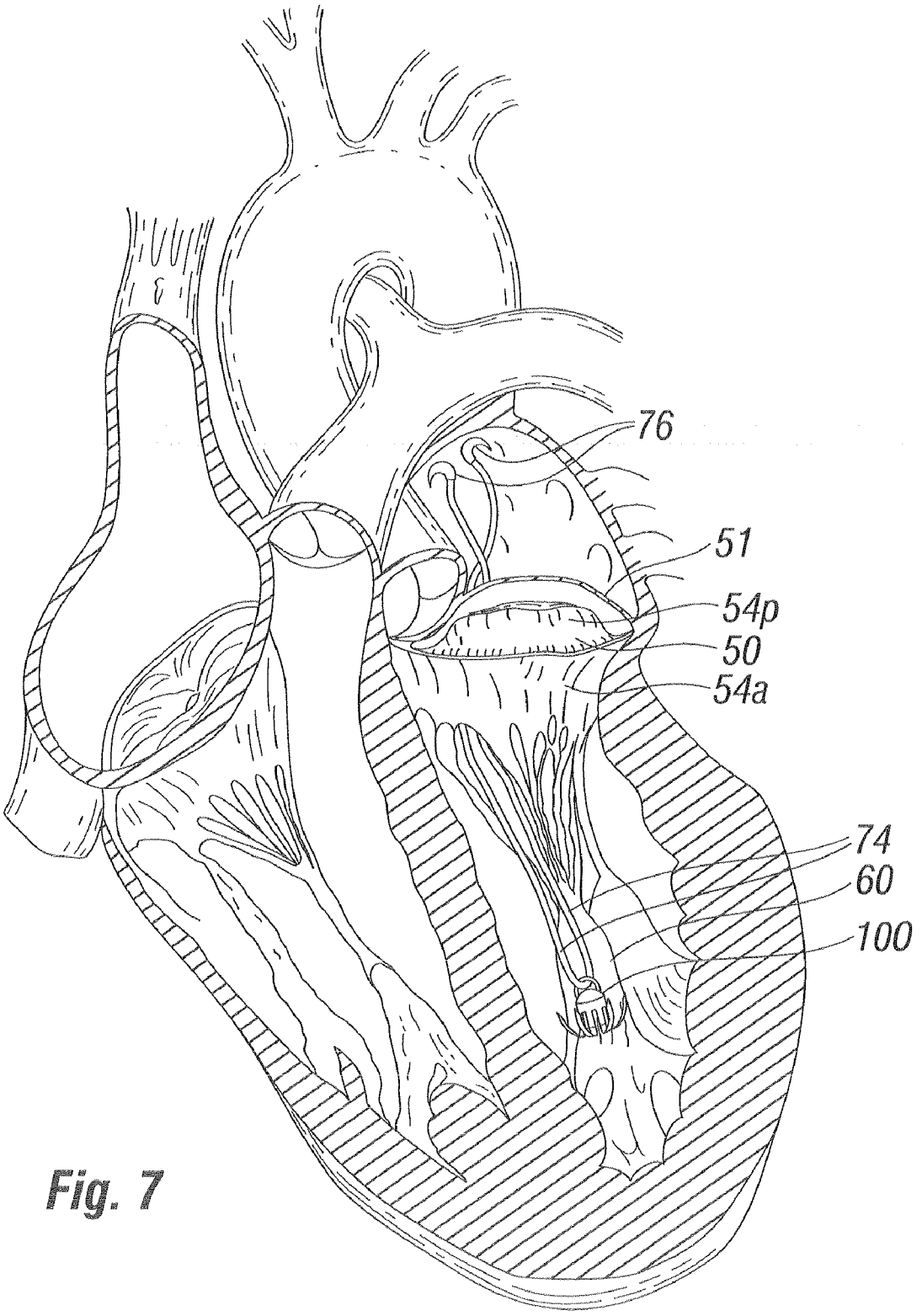

Fig. 7

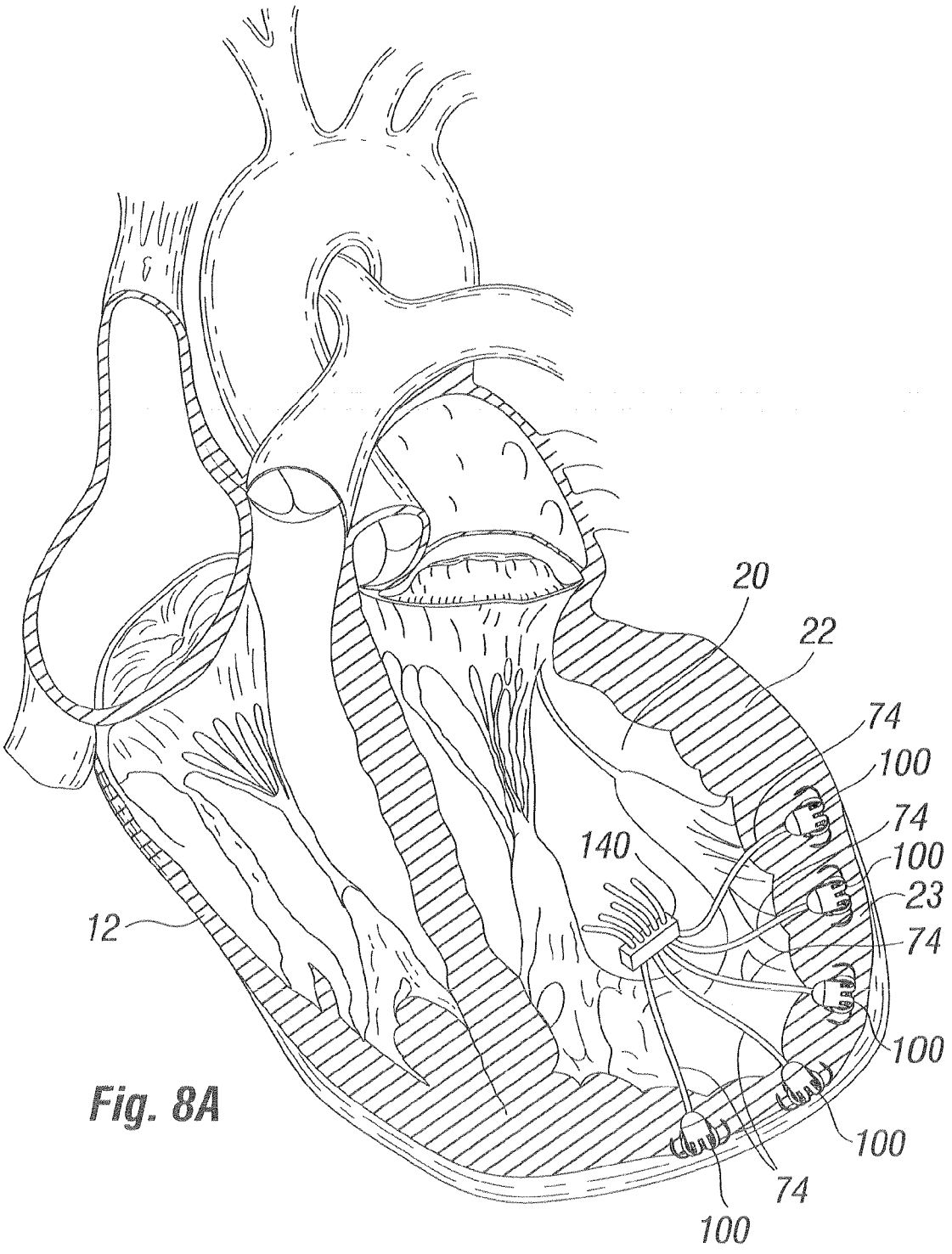

Fig. 8A

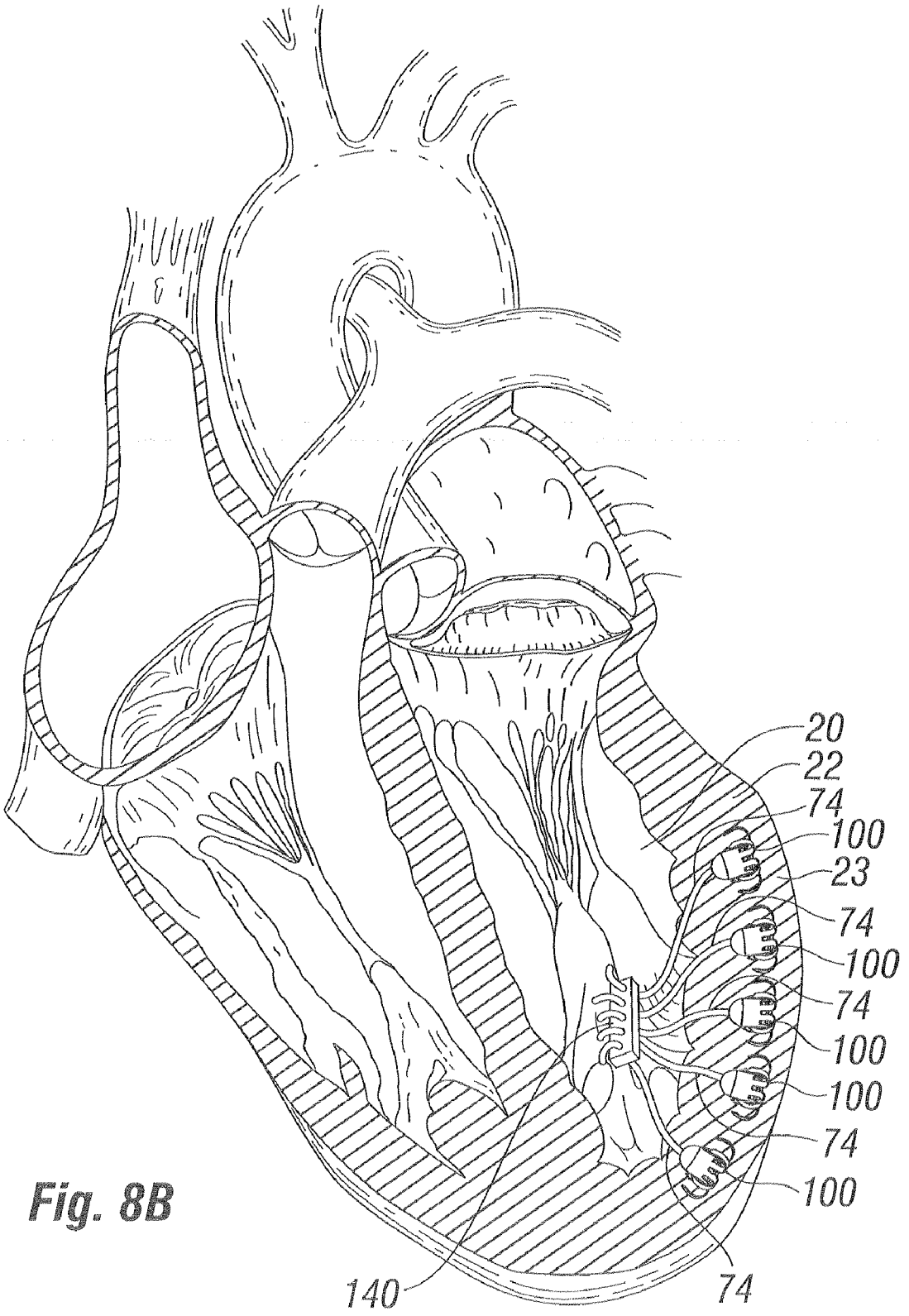

Fig. 8B

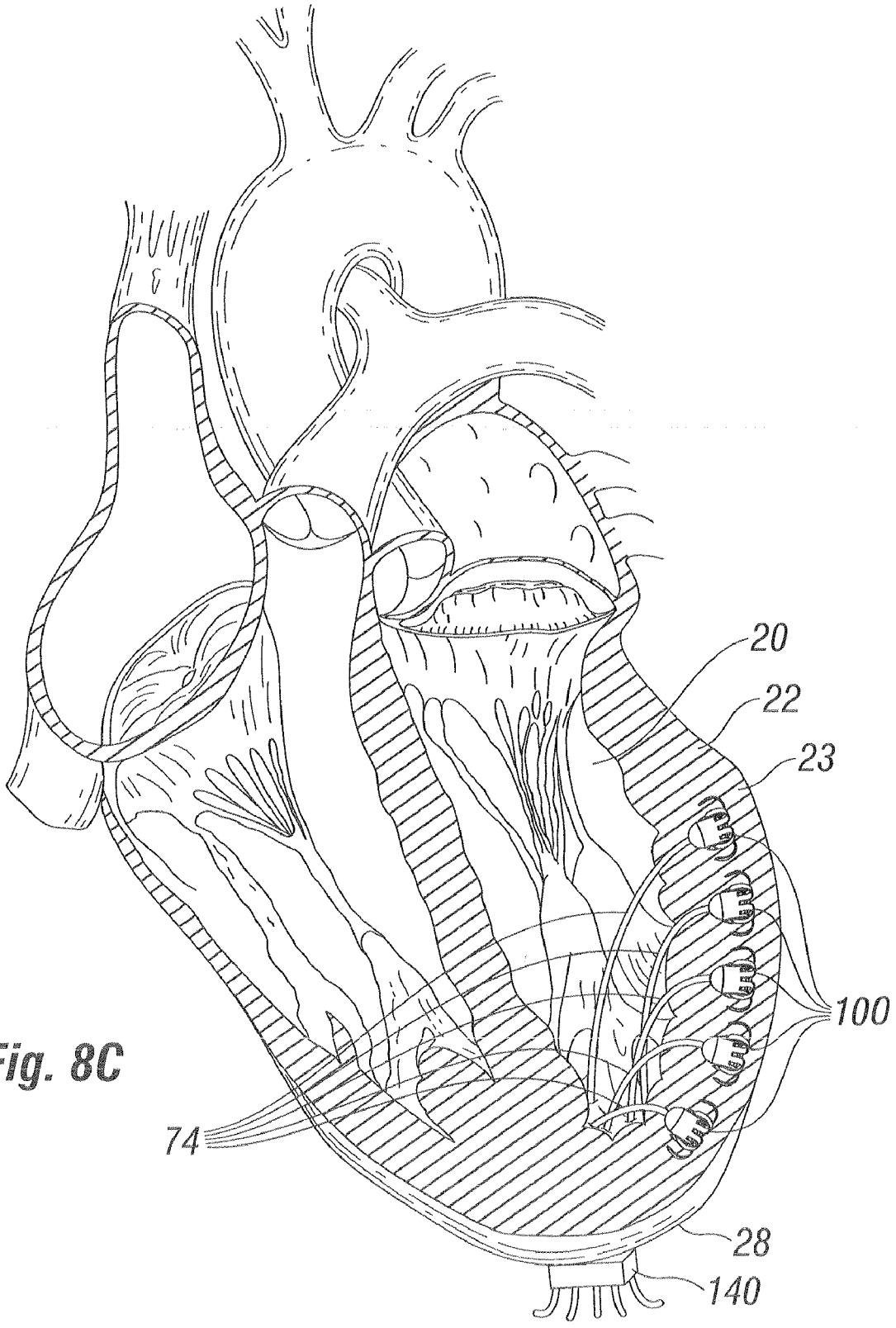

Fig. 8C

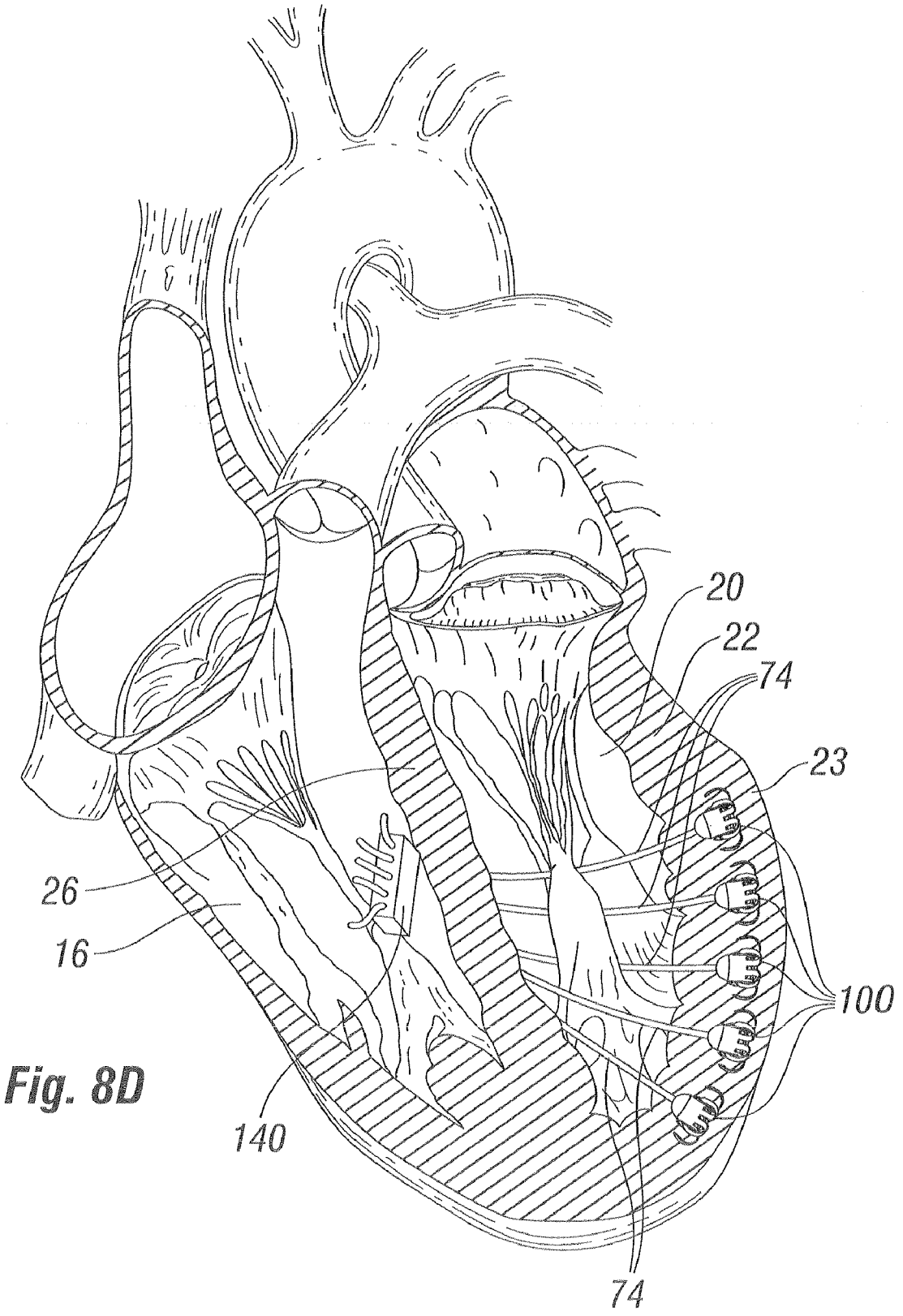

Fig. 8D

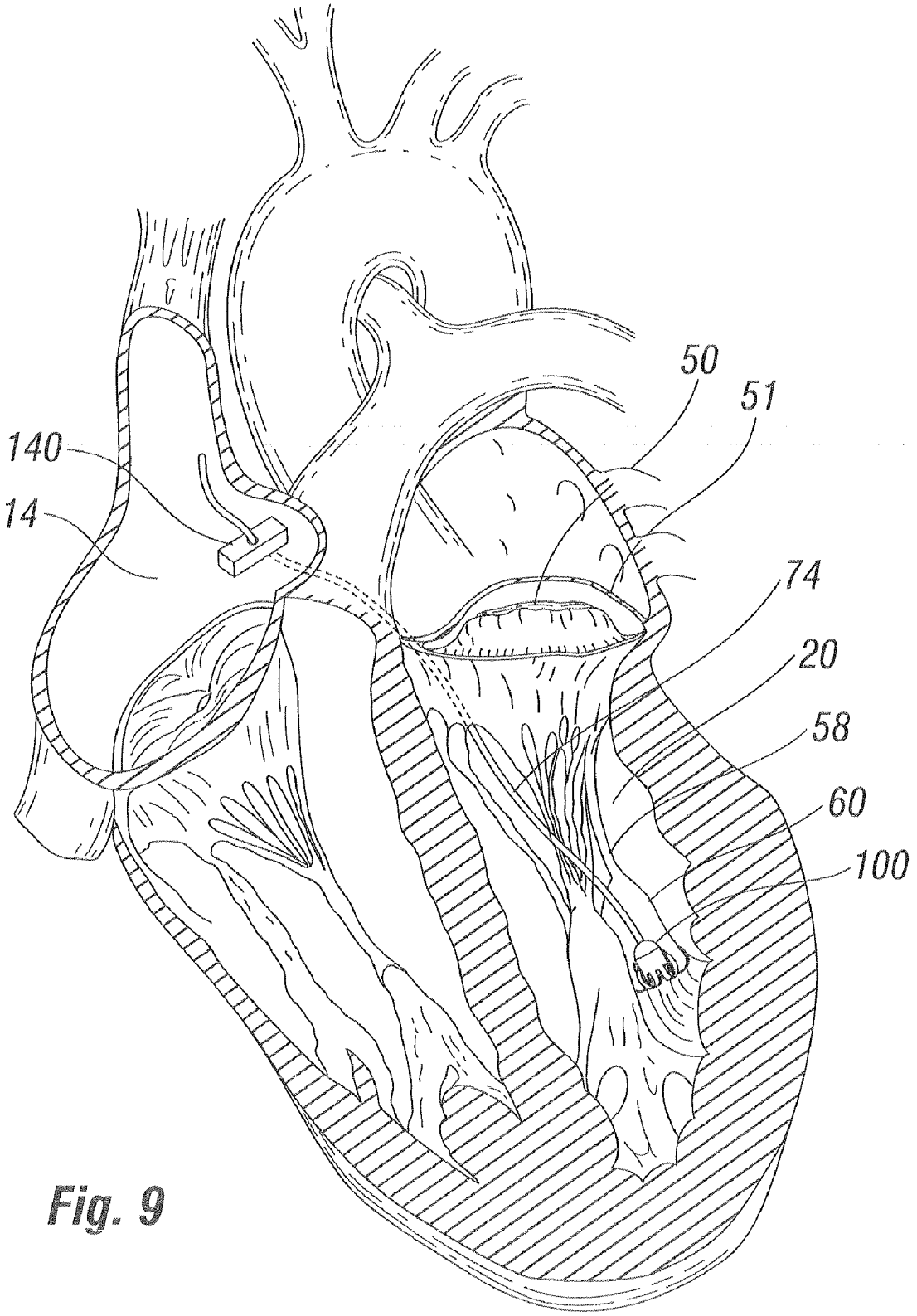

Fig. 9

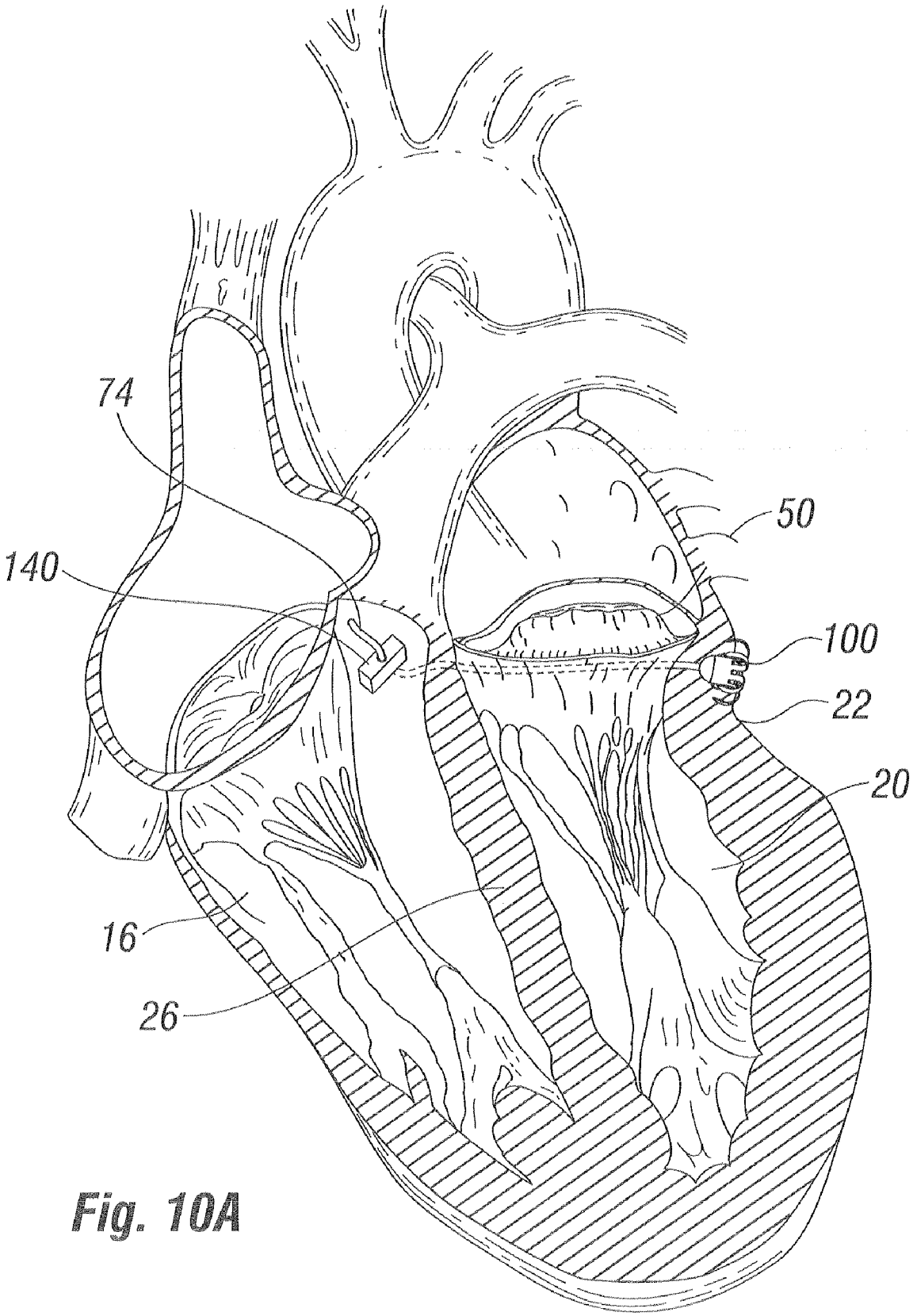

Fig. 10A

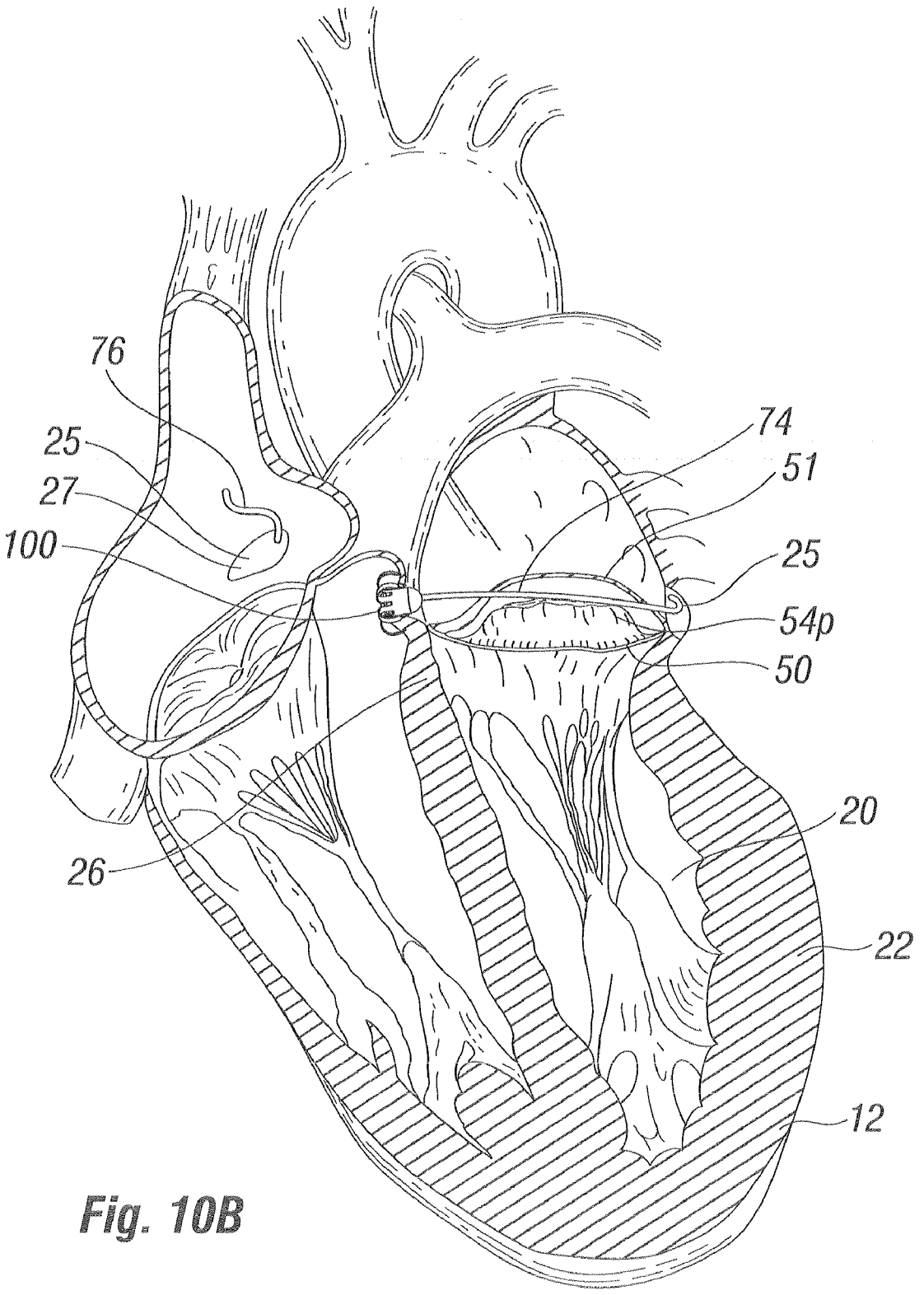

Fig. 10B

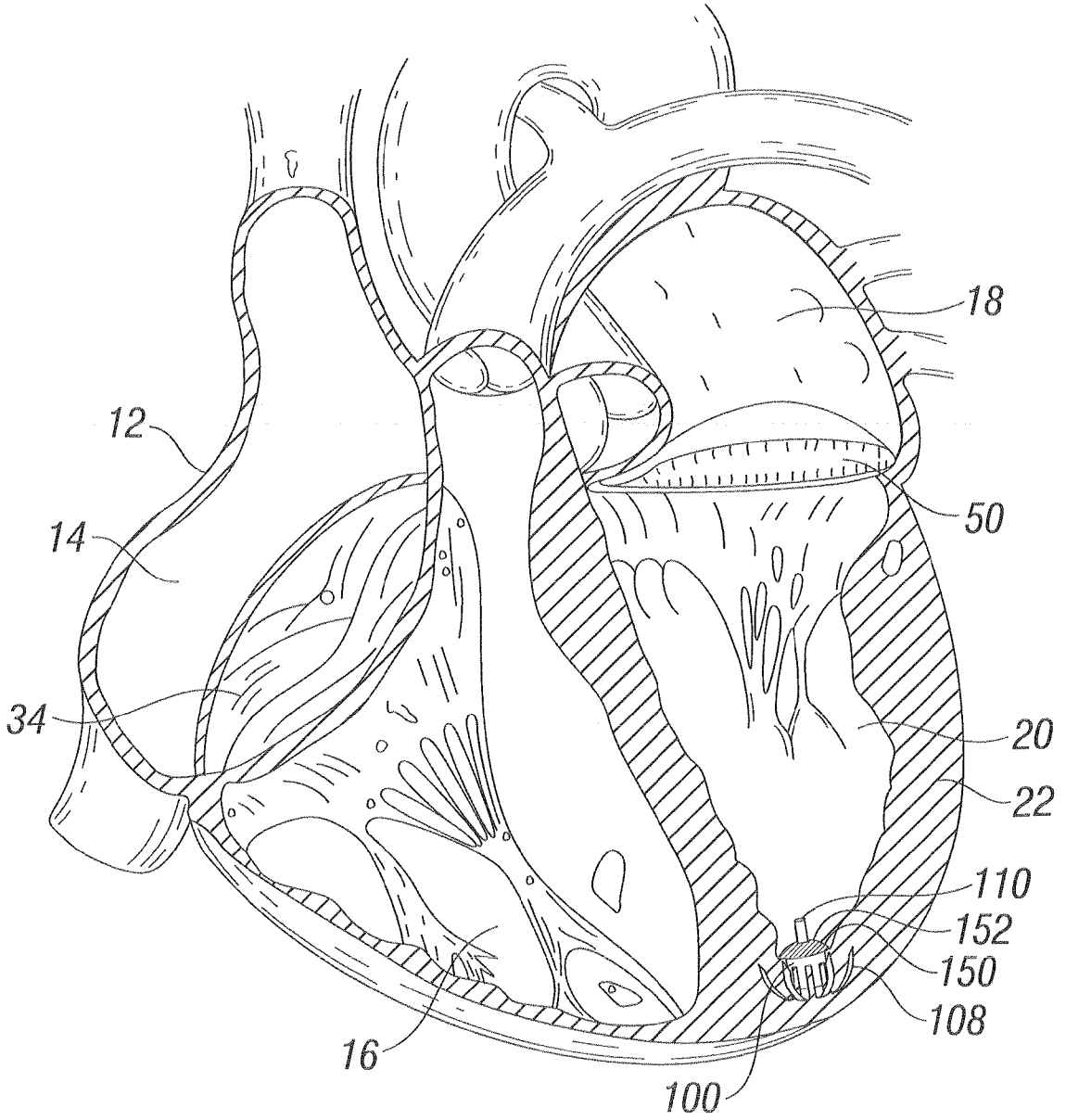

Fig. 11

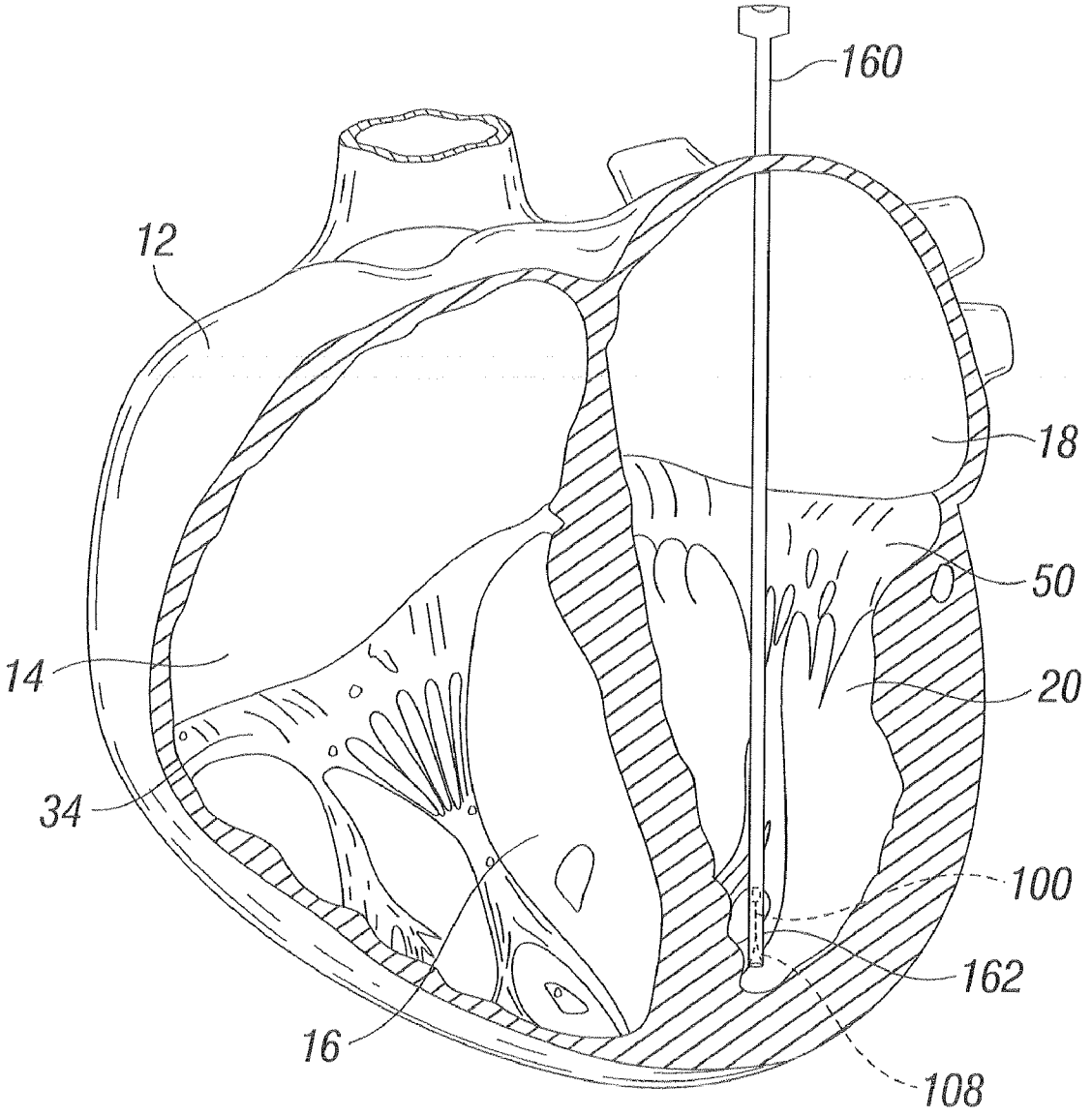

Fig. 12A

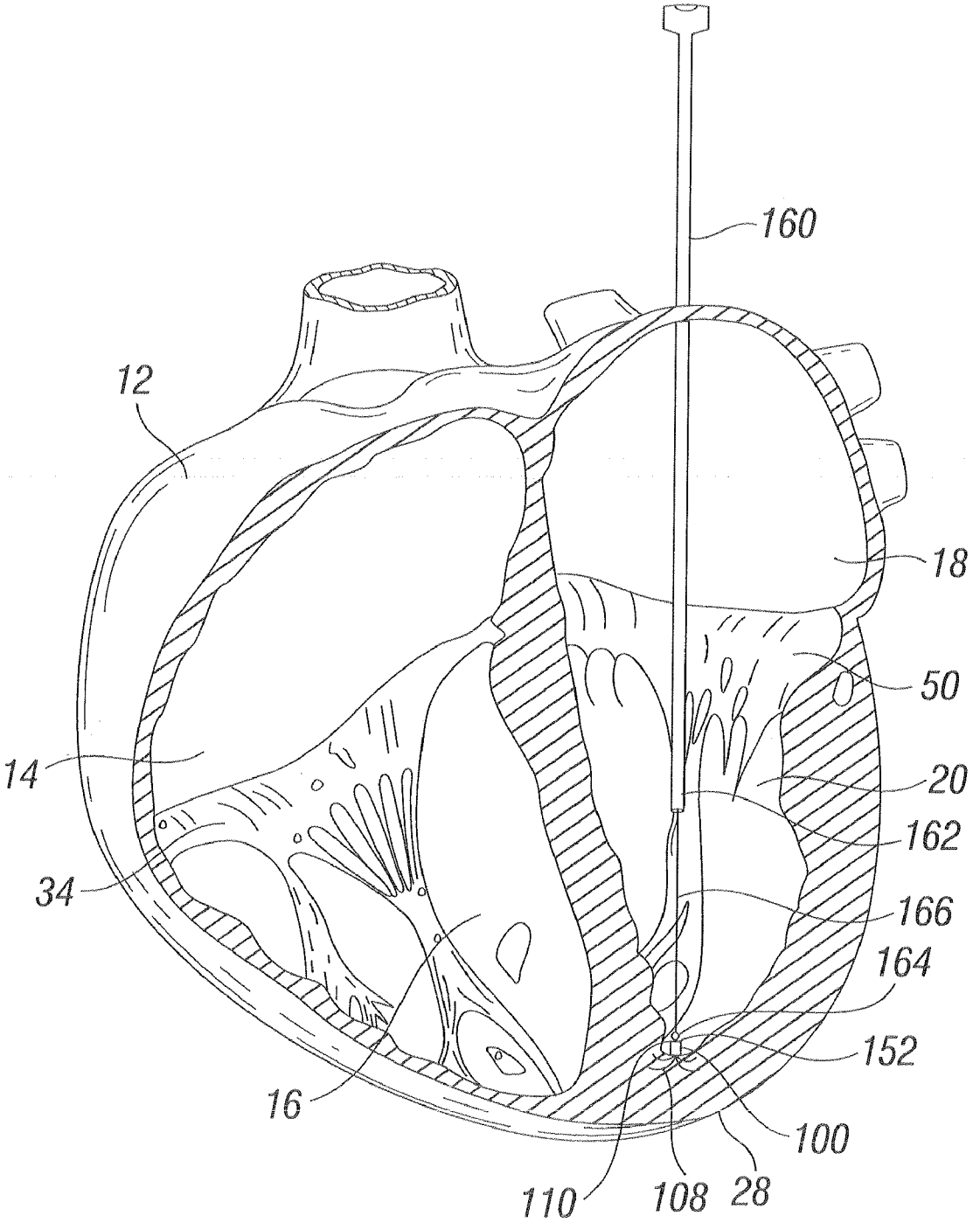

Fig. 12B

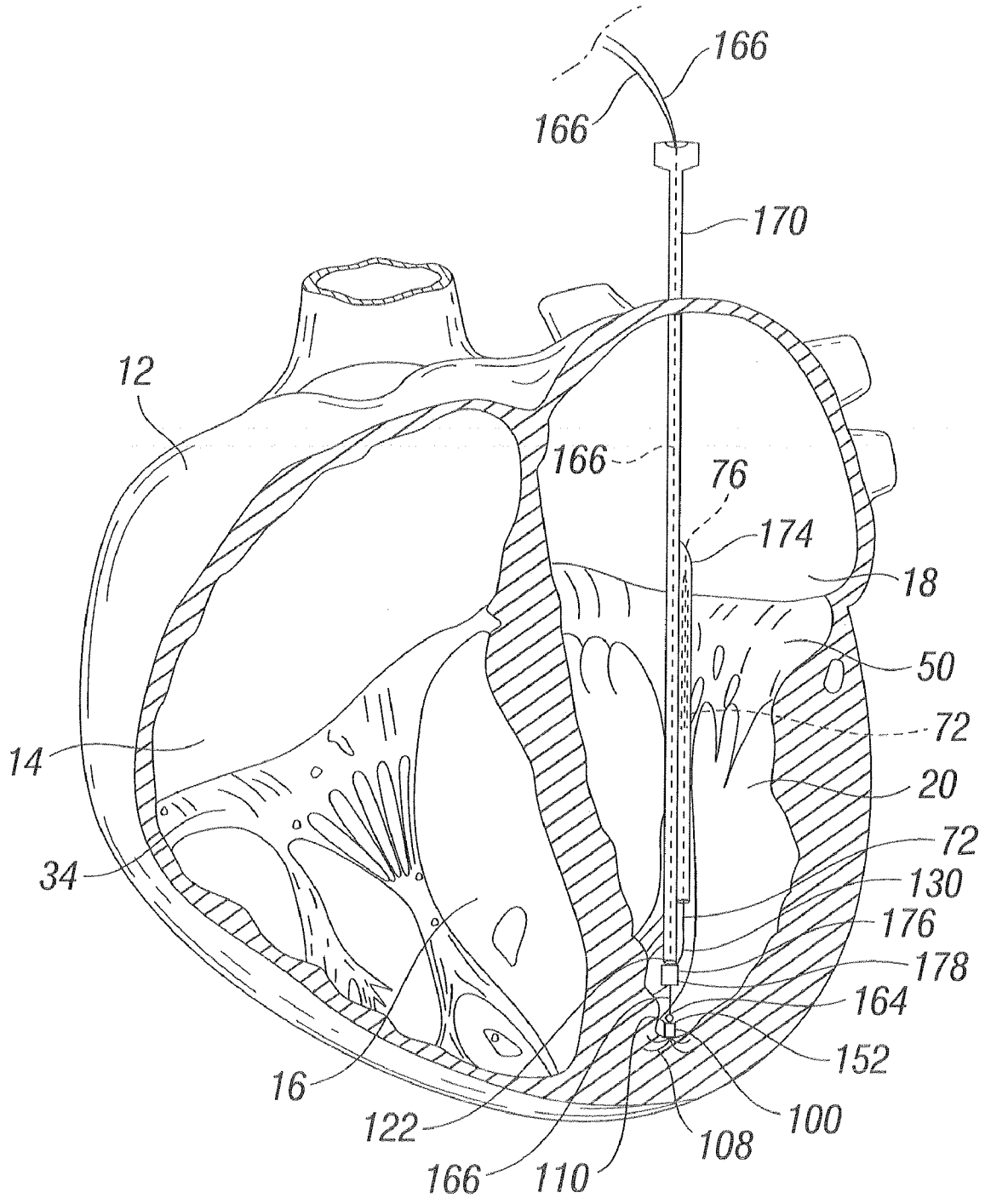
166
166
170
12
166
76
174
18
50
72
14
20
72
34
130
176
178
164
152
16
122
100
108
166
110

Fig. 12C

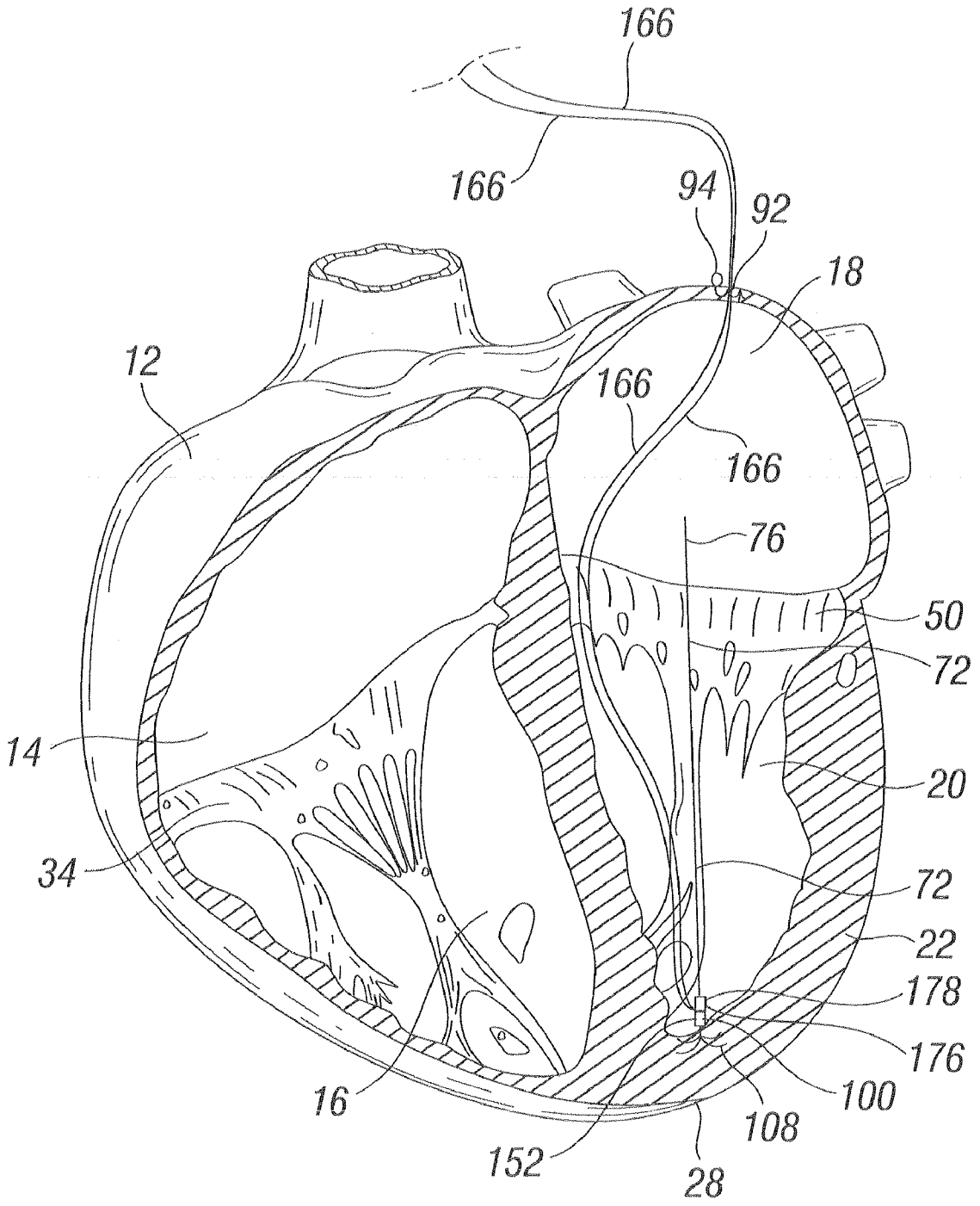
166
166
94
92
18
12
166
166
76
50
72
14
20
34
72
22
178
176
16
100
108
152
28

Fig. 12D

Fig. 13A

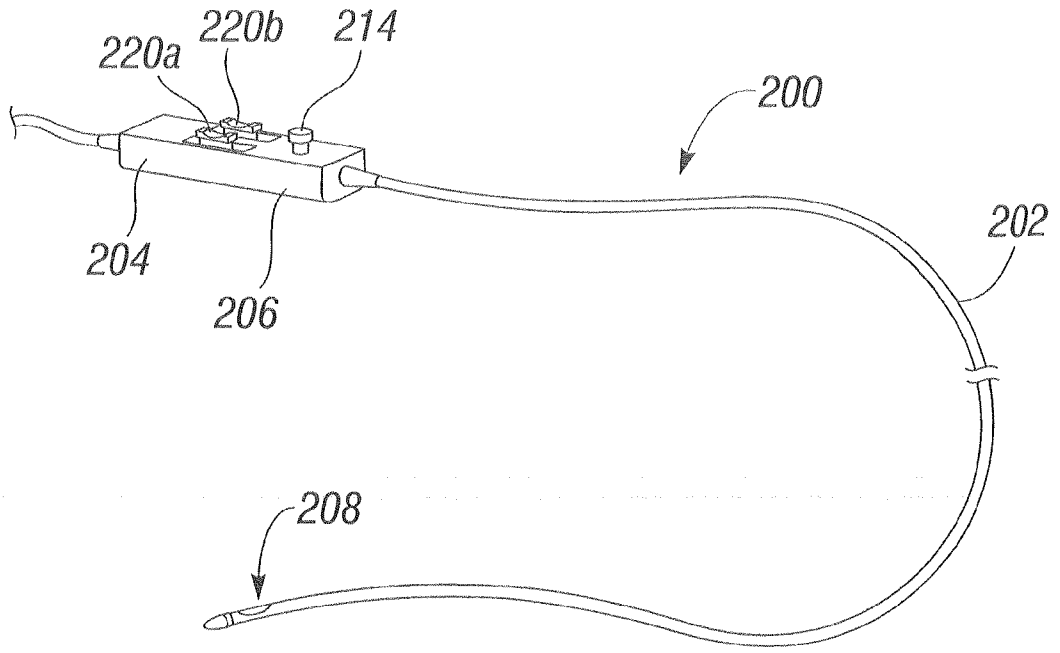

Fig. 13B

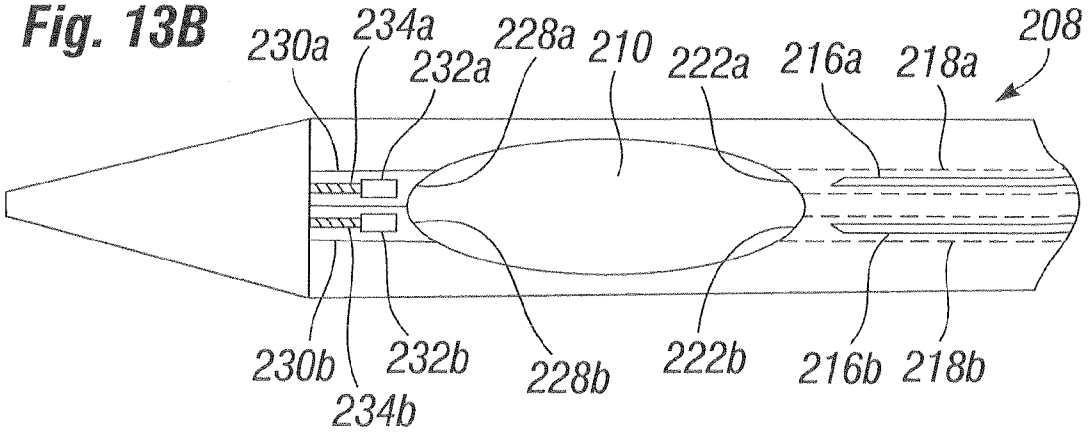

Fig. 13C

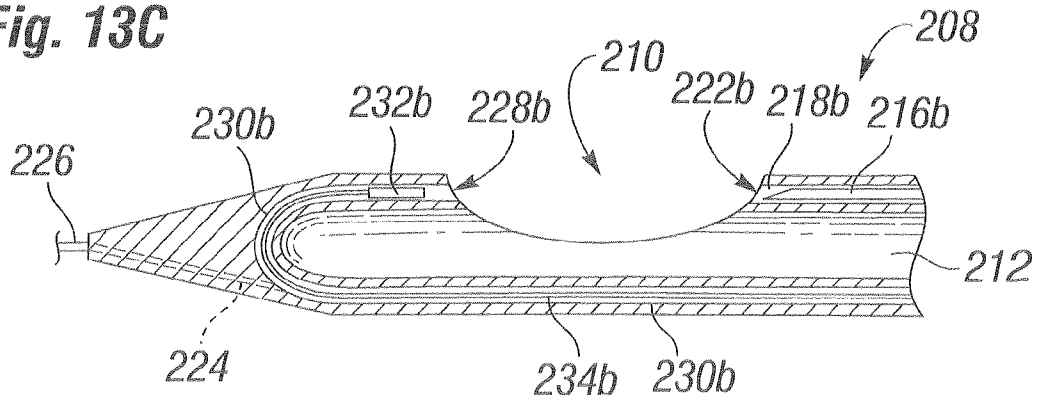

Fig. 14A

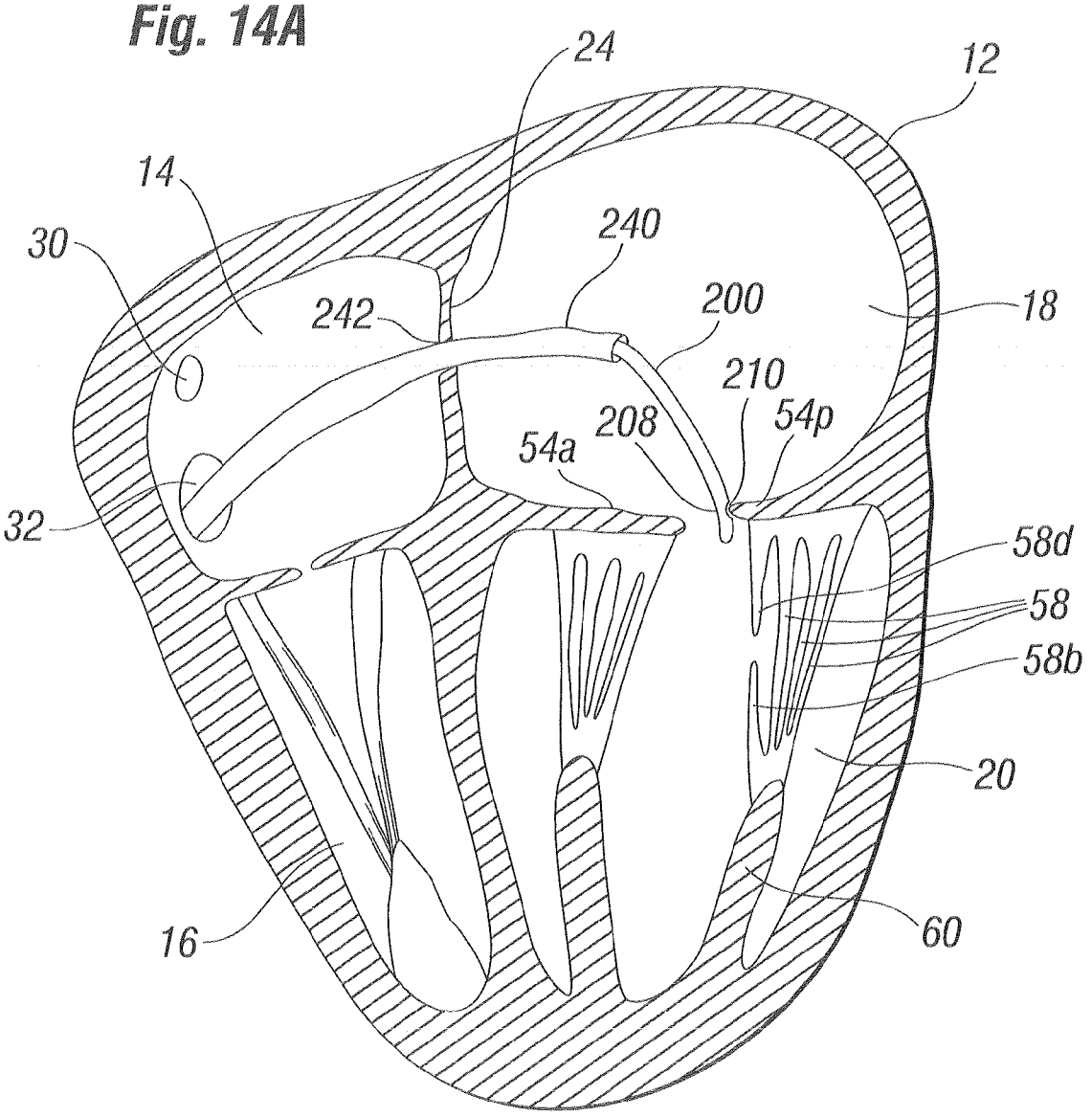

Fig. 14B

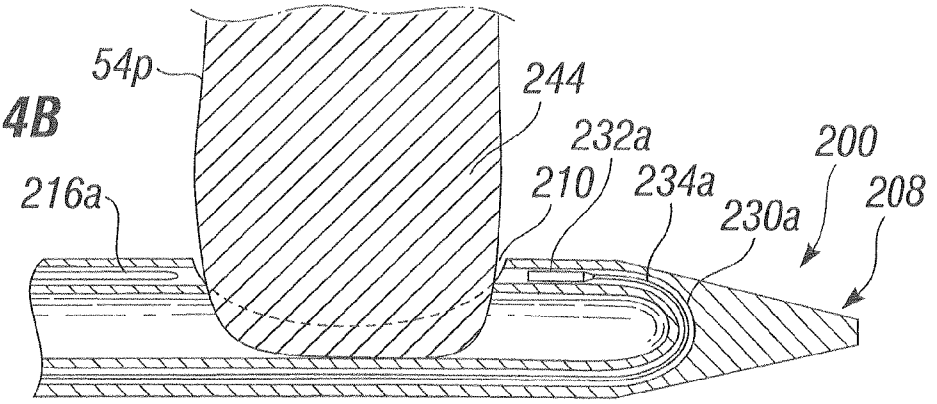

Fig. 14C

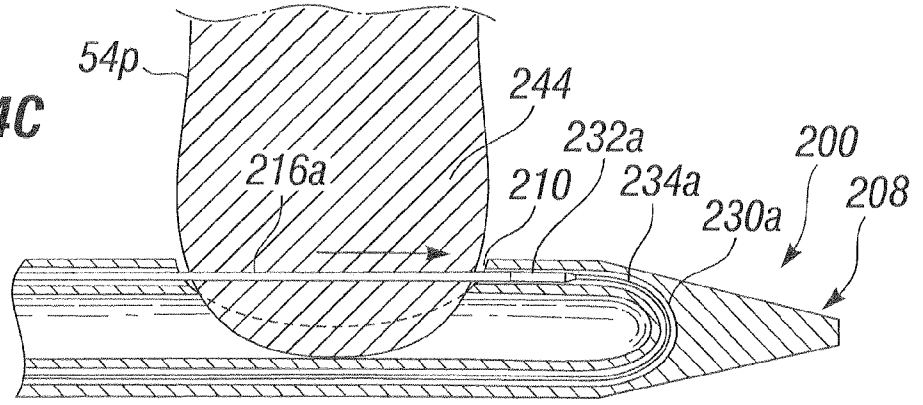

Fig. 14D

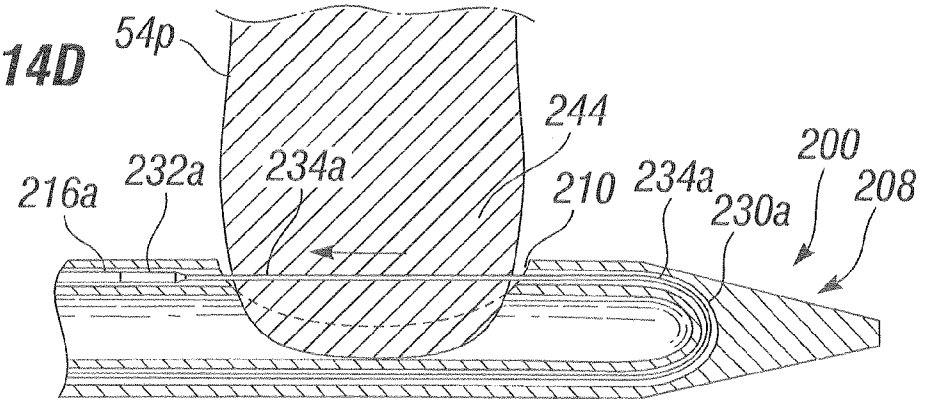

Fig. 14E

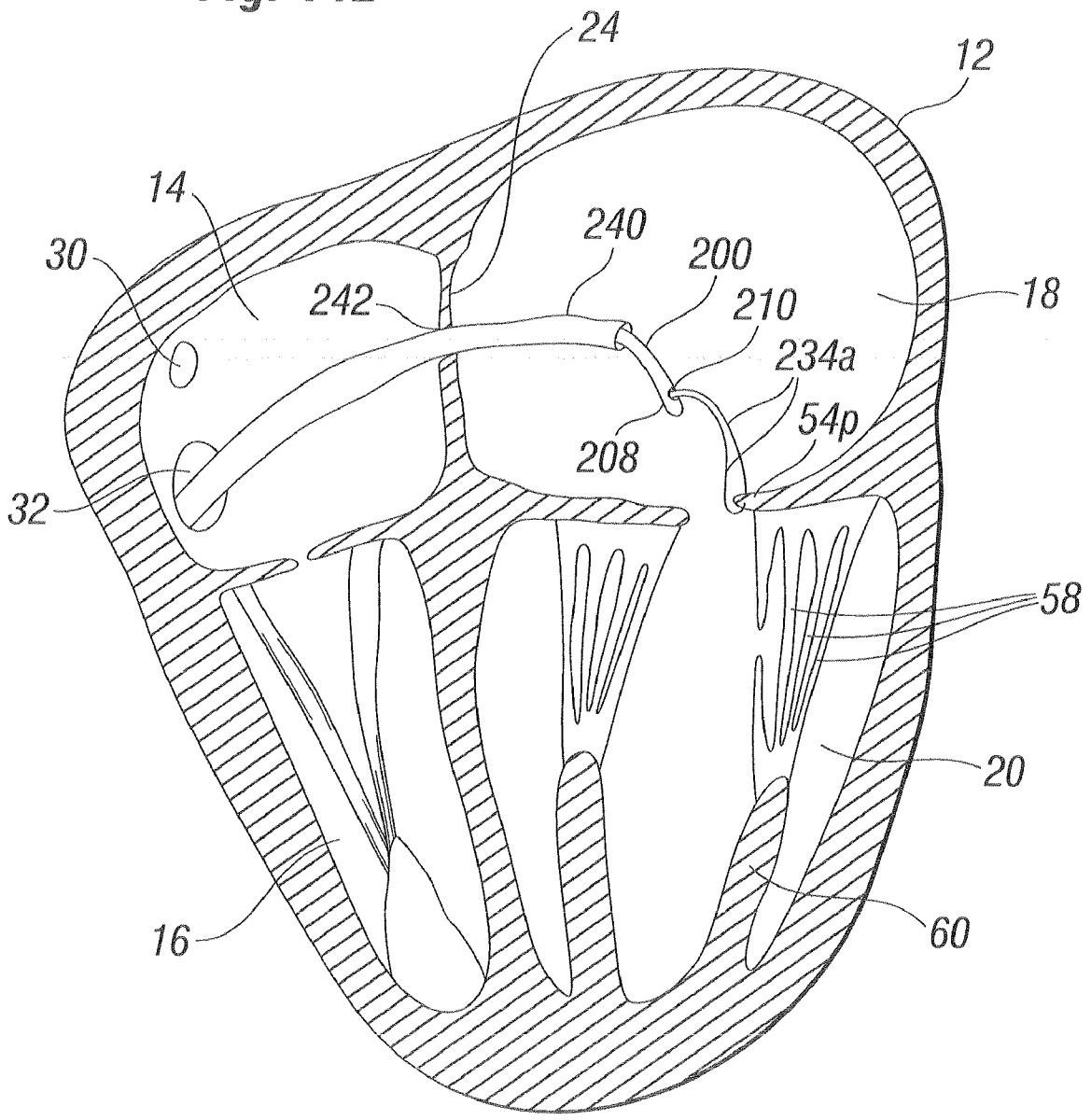

Fig. 15

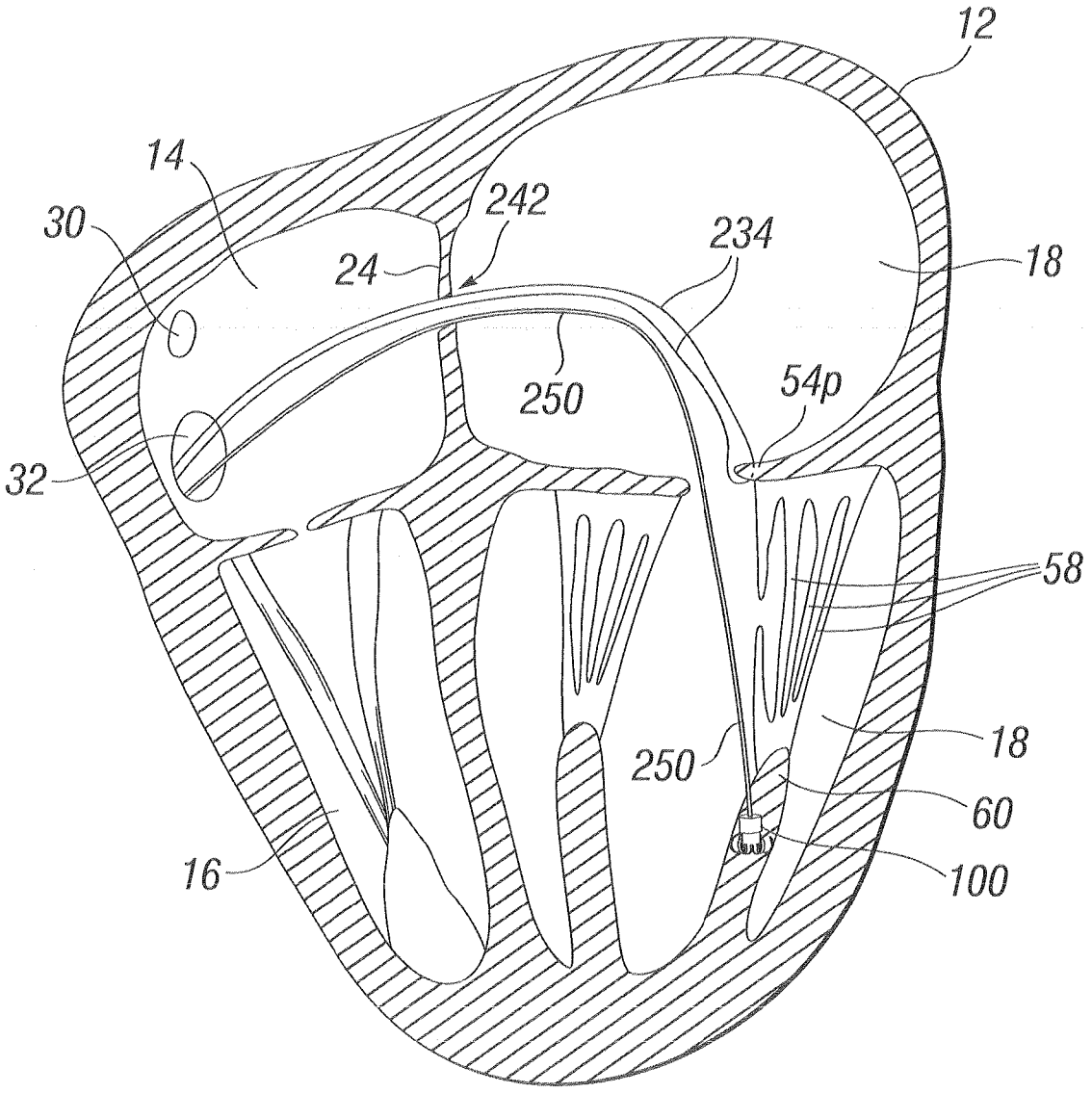

Fig. 16A

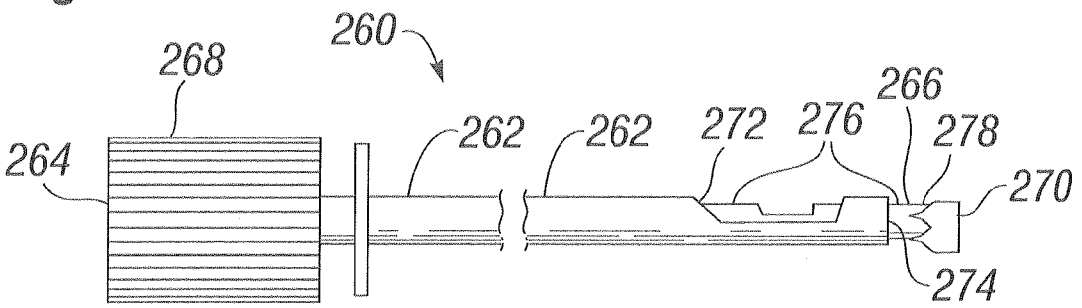

Fig. 16B

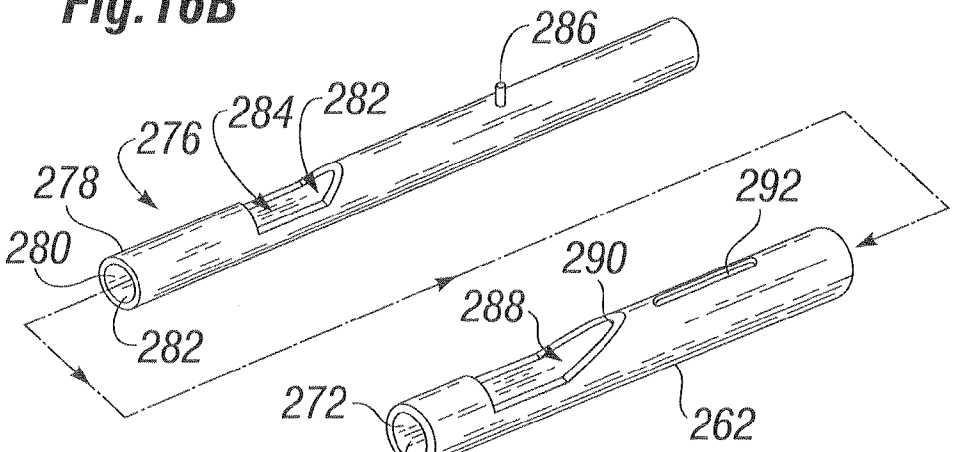

Fig. 16C

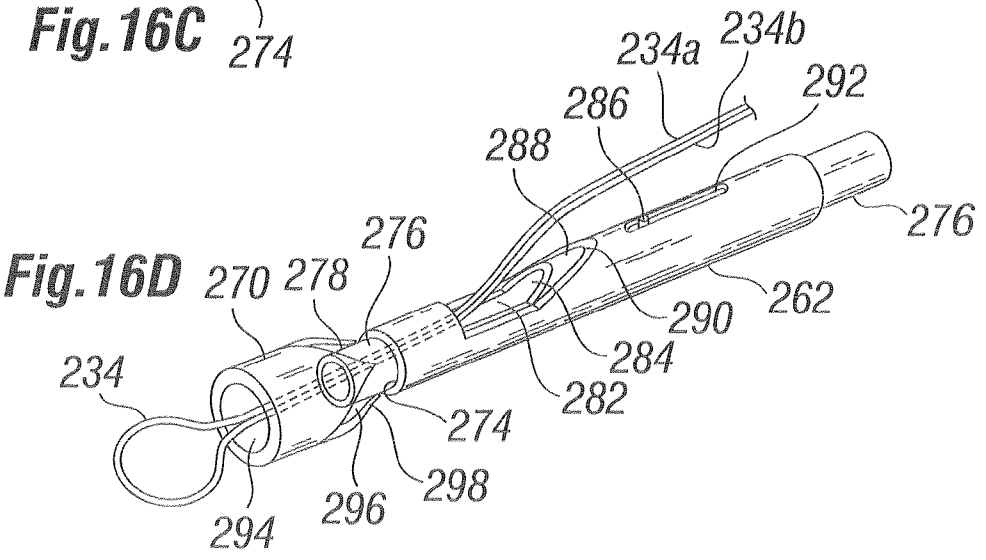

Fig. 16D

Fig. 17A

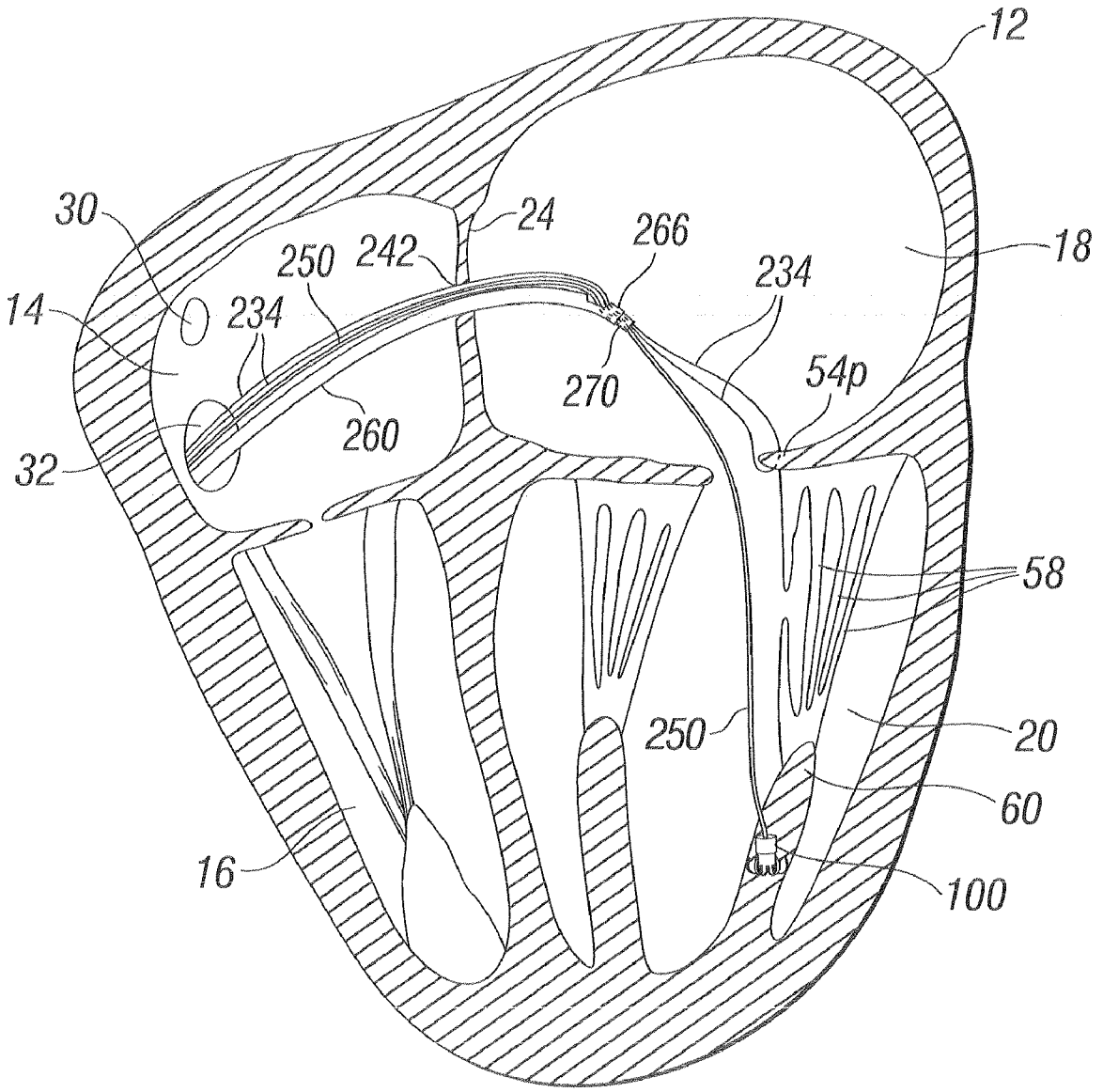
12
30
24
266
18
250
242
234
14
234
270
54p
260
32
58
250
20
60
16
100

Fig. 17B

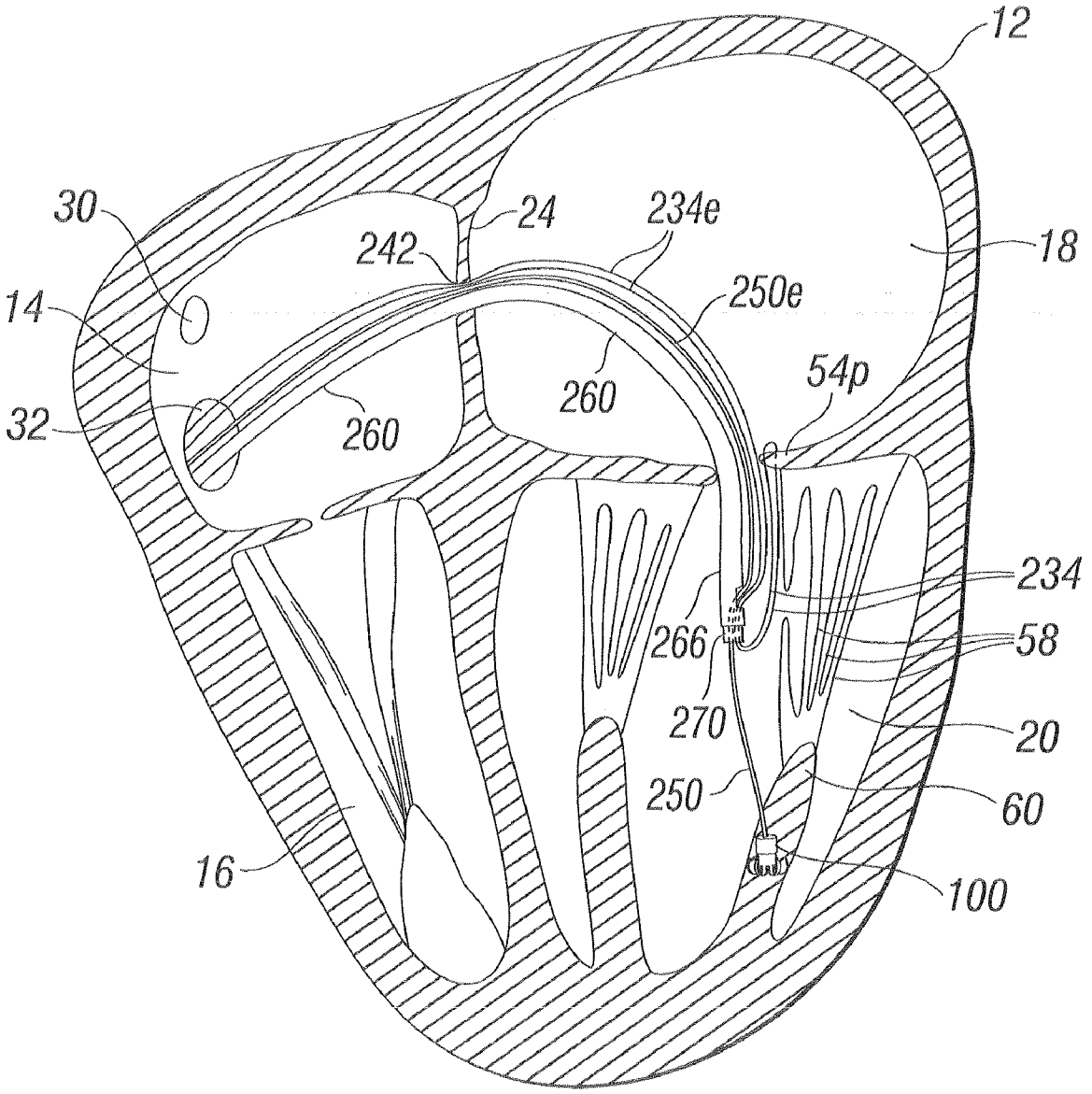
12
30
24
234e
242
18
14
250e
260
54p
32
260
234
266
58
270
20
250
60
16
100

Fig. 17C

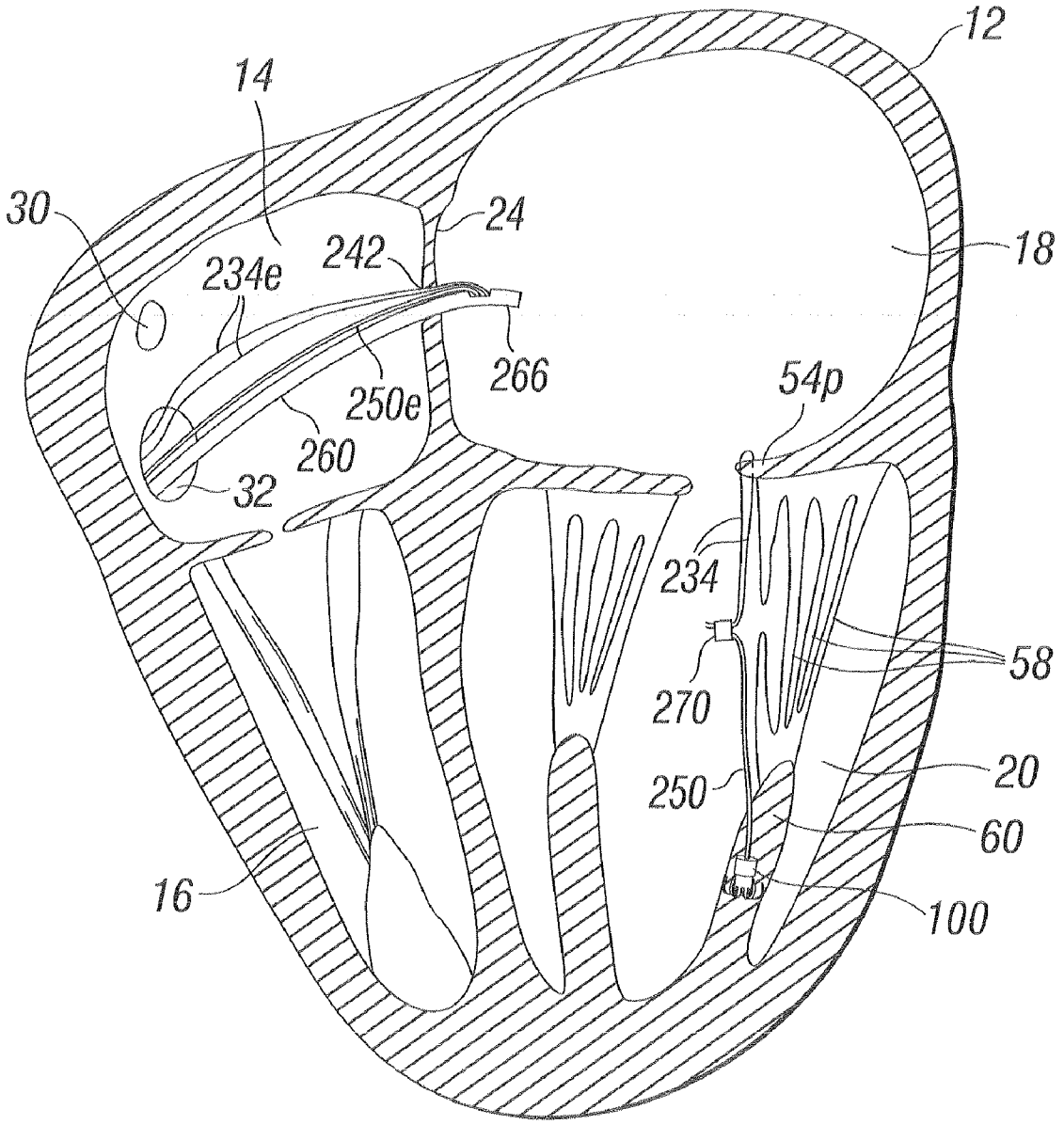
12
14
30
24
18
234e
242
266
54p
250e
260
32
234
58
270
20
250
60
16
100

Fig. 18A

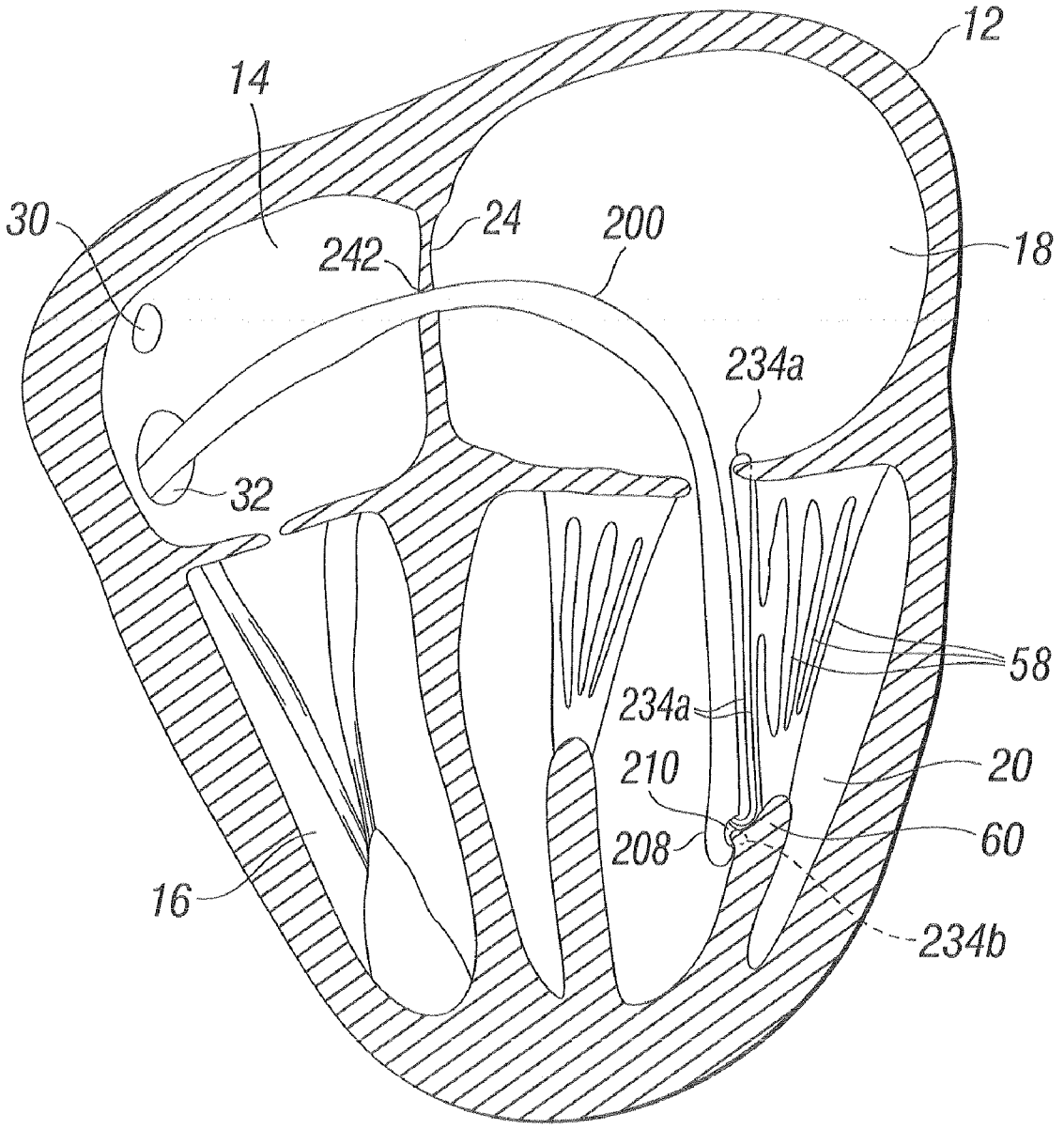

Fig. 18B

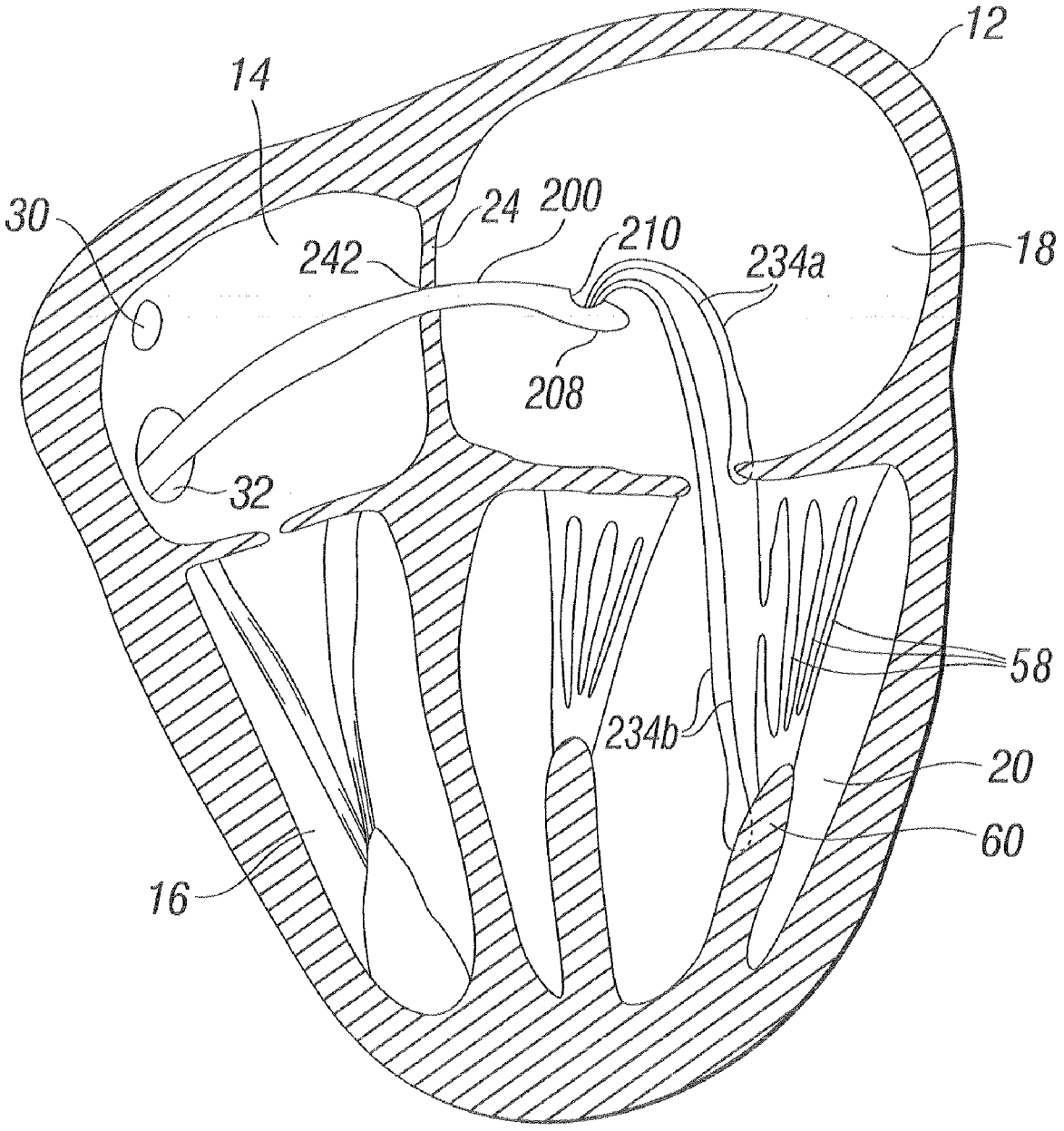

SUTURE AND METHOD FOR REPAIRING A HEART

RELATED APPLICATIONS

[0001] The present application claims priority from U.S. provisional patent application Ser. No. 60/889,921, filed on Feb. 14, 2007 and entitled "Suture and Method for Repairing a Heart," the contents of which are expressly incorporated herein in their entirety.

FIELD OF THE INVENTION

[0002] The present invention relates generally to medical devices, and more particularly, to implantable medical devices for treating diseases, disorders, and malformations of a heart

BACKGROUND OF THE INVENTION

[0003] The function of the heart may be seriously impaired if any of the heart valves is not functioning properly. The heart valves may lose their ability to close properly due to disease or defects, such as (for example) by a mitral or tricuspid valve leaflet becoming partially or completely detached from a papillary muscle (e.g., by ruptured chordae tendinae) thereby resulting in prolapsing of the leaflet. The inability of the heart valve to close will cause a leak backwards, commonly referred to as regurgitation, through the valve. On the left side of the heart, regurgitation through the mitral valve may seriously impair the function of the heart **1** since a portion of the heart stroke volume of blood will return from the left ventricle to the left atrium instead of passing through the aortic valve to the organs of the body. Accordingly, the damaged heart is required to work much harder to maintain adequate circulation, a condition that inevitably ends in heart enlargement and/or heart failure.

[0004] Repairing heart structures by means of surgery often involves the use of needle and thread for attaching tissue portions together or for attaching a prosthetic implant to tissue. A traditional surgical suture typically has a needle attached to one or both ends of a thread. In a common method for attaching a suture directly to tissue (i.e., when not directly attaching tissue to tissue or tissue to implants), one needle is passed through the tissue one or several times and advanced to about the middle of the thread. The thread may or may not be knotted at this point to prevent the thread from moving slidingly through the tissue. Whether knotted or not, the end result is that the thread is attached to the tissue.

[0005] While performing heart surgery, the above technique is often used in chordae tendinae replacement. A first end of a suture thread is attached to a papillary muscle inside the left ventricle of a heart. The appropriate length of the thread is determined, and the other end of the suture thread is stitched through one or more of the leaflets of the mitral valve for creating artificial chordae tendinae. This procedure can be performed for treating a regurgitant mitral valve when the reason for the regurgitation (i.e., leak) is prolapse of a mitral valve leaflet into the left atrium. However, attaching a thread (i.e., suture) to the papillary muscle can be cumbersome due to difficulties in accessing the surgical site, including limitations in physical and visual access. The limited visual access results from the relatively narrow space between the leaflets of a mitral valve. Furthermore, access to the desired portion of the heart can be difficult while performing conventional open-heart surgery (i.e., with a sternal split). Further difficulties can arise as a result of the difficult angles at which the instruments are held.

[0006] Due to the shortcomings associated with existing medical procedures, the attachment of artificial chordae can be time consuming and may often be inaccurate. Accordingly, a need exists for improved devices and methods for creating artificial chordae. To reduce the trauma to the patient, it is desirable that the devices and methods be adapted for use in a percutaneous or minimally-invasive procedure. The present invention addresses this need.

SUMMARY OF THE INVENTION

[0007] Embodiments of the present invention provide devices and methods for securely attaching a thread to tissue without the need for conventional suturing, thereby eliminating the need for surgical instruments such as needle holders and forceps. Some embodiments are adapted for attaching thread to heart wall tissue; however, the features of the invention are also applicable to a wide variety of other medical procedures wherein it is desirable to securely anchor a suture thread or other structure to a portion of tissue without using a needle and forceps.

[0008] Embodiments of the invention include new devices and methods for creating artificial chordae and for repairing various other heart defects without suturing. In one variation, embodiments may be used to reduce dilation of a heart wall, such as in the left ventricle. In some embodiments of methods of use, these treatments are performed in a percutaneous manner by means of catheter access.

[0009] In one aspect, a suture device for repairing a human heart comprises a thread, an anchor, and a delivery system. The anchor is configured to engage tissue, such as tissue of an inner wall of the heart. The thread is attached to the anchor at one end and configured to be attached (via conventional suture tying, clipping, or otherwise) to heart tissue (such as valve leaflet tissue) at another end. The delivery system is configured to deliver the anchor in a delivery configuration, and to deploy the anchor into tissue at a desired location (such as at or adjacent papillary muscles of the heart). In some embodiments, the anchor comprises memory materials (such as Nitinol) and/or is biased toward the deployed state so that the anchor is configured to expand from a delivered state to a deployed state when ejected from a distal end of a sheath on the delivery catheter.

[0010] In one arrangement, the anchor is configured for attachment at or adjacent papillary muscle tissue, and the thread is configured to be coupled to the anchor and attached to a leaflet for creating an artificial chordae tendinae. The delivery system includes a sheath or other structure for delivering the anchor in a collapsed condition to the desired deployment location.

[0011] In another embodiment, a method for repairing a human heart comprises gaining access to the inner portion of a human heart and deploying a suture anchor. A thread is then attached to tissue and coupled to the anchor. The thread may be foreshortened to a desired length and then locked in the foreshortened position. This method may be used for replacing chordae tendinae, for treating dilation of a left ventricle, or for other heart treatments.

[0012] In another embodiment, a method of treating mitral valve regurgitation comprises performing open heart surgery for gaining direct access to the left atrium and the mitral valve. An anchor is deployed along or adjacent to the papil-

lary muscle, and an elongate member (e.g., thread) is attached at a first end to the anchor and at a second end to a mitral valve leaflet. If desired, the length of the elongate member may be adjusted to close a gap in the mitral valve, and the thread is then knotted or otherwise locked to the mitral valve leaflet to maintain the desired length.

[0013] In another embodiment, a method of treating an enlargement of a left ventricle of a heart comprises accessing the inside of a heart (e.g., through surgical incision) and deploying multiple anchor members at locations along the left ventricular muscular wall. Threads extending from the anchor members are connected to a lock. The threads are shortened to pull the anchors, and therefore the muscular wall, into closer proximity to the lock and to the other anchors. The threads are then locked in the shortened condition to maintain the anchors in closer proximity, thereby reducing the size of the left ventricle. In one embodiment, the lock is located within the left ventricle. In another embodiment, the lock is located within a different chamber of the heart, such as the right atrium or the right ventricle. In another embodiment, the lock is located outside of the heart, such as, for example, at or adjacent the apex of the heart.

[0014] In another aspect, a method of treating an enlargement of a ventricle of a heart comprises accessing the inside of a heart via a percutaneous or surgical incision, deploying anchors in the left ventricular muscular wall wherein suture threads extend from the anchors, and connecting the suture threads to a lock. The anchors are allowed to grow into the tissue such that they are securely attached to the heart wall. After sufficient time, the inside of the heart may be re-accessed by means of catheter-based technology for localizing the lock, and the suture threads are then foreshortened and locked.

BRIEF DESCRIPTION OF THE DRAWINGS

[0015] FIG. **1** shows a cross-sectional view of a human heart with a device according to an embodiment of the invention deployed therein;

[0016] FIG. **2**A illustrates a device comprising an anchor, an elongate member, and hooks according to an embodiment of the invention;

[0017] FIG. **2**B illustrates a device comprising an anchor and an elongate member according to a further embodiment of the invention;

[0018] FIG. **2**C illustrates a device comprising an anchor and an elongate member according to a further embodiment of the invention;

[0019] FIG. **3**A depicts a device comprising an anchor and rod-like elongate member according to a further embodiment of the invention;

[0020] FIG. **3**B depicts a device similar to that of FIG. **3**A with a magnetic connector secured thereto according to an embodiment of the invention;

[0021] FIGS. **4**A and **4**B illustrate an expandable anchor, in unexpanded and expanded configurations, respectively, according to an embodiment of the invention;

[0022] FIGS. **5**A through **5**D illustrate a method of delivering the device wherein a delivery system comprises a sheath for maintaining the anchor in the collapsed position during advancement according to an embodiment of the invention;

[0023] FIG. **6** illustrates an embodiment of the invention during implantation wherein a suture thread is stitched through the anterior mitral valve leaflet to create replacement chordae tendinae;

[0024] FIG. **7** illustrates a device wherein suture is stitched through the mitral valve annulus for pulling the papillary muscle closer to the annulus, thereby relieving strain on the chordae tendinae according to an embodiment of the invention;

[0025] FIG. **8**A illustrates anchors are configured for engaging the inner wall of the left ventricle and aneurysms according to an embodiment of the invention;

[0026] FIG. **8**B illustrates the device of FIG. **8**A after foreshortening and locking the threads for reshaping the left ventricle according to an embodiment of the invention;

[0027] FIG. **8**C illustrates an embodiment of the invention wherein the threads are captured and held in a locking mechanism located outside the left ventricle;

[0028] FIG. **8**D illustrates an embodiment of the invention wherein the threads are captured and held in a locking mechanism located in the right ventricle along the interventricular septum;

[0029] FIG. **9** illustrates a further embodiment of the invention wherein the anchor of the suture is deployed inside a papillary muscle and the elongate member (e.g., thread) is locked inside the right atrium close to the annulus of the mitral valve, thereby closing the papillary muscle to the annulus and relieving tension on the chordae tendinae;

[0030] FIG. **10**A illustrates a further embodiment of the invention wherein the anchor is located just below the mitral valve in the left ventricle wall and the locking mechanism is located in the right ventricle on the septum, thereby pulling the posterior leaflet from lateral towards the septum and shortening the antero-posterior diameter (also called septo-lateral distance) for repairing a mitral valve leak;

[0031] FIG. **10**B depicts an embodiment of the invention wherein the anchor is located close to the mitral valve in the ventricular septum and the thread is running through the coronary sinus and the elongate member (e.g., thread) is locked inside the coronary sinus, in the orifice of or just outside the coronary sinus orifice, thereby pulling the posterior leaflet from lateral towards the septum and shortening the anterior-posterior diameter for repairing a mitral valve leak;

[0032] FIG. **11** depicts an anchor deployed in a heart according to an embodiment of the invention;

[0033] FIGS. **12**A **12**D depict a method for deploying a device according to an embodiment of the invention;

[0034] FIG. **13**A is a perspective view of a suture deployment device according to an embodiment of the invention;

[0035] FIGS. **13**B and **13**C are top and side views, respectively, in partial cross section of the distal portion of the suture deployment device of FIG. **13**A;

[0036] FIG. **14**A is a front view of a heart, in cross section, with a suture deployment device advanced to a valve leaflet to deploy suture according to an embodiment of the invention;

[0037] FIG. **14**B-**14**C are side views, in cross section, of the distal end of the suture deployment device of FIG. **14**A deploying suture through valve leaflet tissue;

[0038] FIG. **14**A is a front view of the heart, in cross section, from FIG. **14**A with the suture deployment device having secured suture to the valve leaflet;

[0039] FIG. **15** is a front view of a heart, in cross section, with a suture, anchor, and elongate member deployed therein according to an embodiment of the invention;

[0040] FIG. **16**A is a side view of a suture securing and cutting catheter for use in securing suture according to an embodiment of the invention;

[0041] FIGS. **16**B-**16**D are exploded and assembled views of the distal portion of the suture securing and cutting catheter of FIG. **16**A;

[0042] FIGS. **17**A and **17** B are front views of a heart, in cross section, with a suture securing and cutting catheter advancing a suture clip along suture lines and an elongate member to form a replacement chordae tendinae according to an embodiment of the invention;

[0043] FIG. **17**C is a front view of the heart of FIGS. **17**A-**17**B with the suture clip deployed and excess suture removed to form a replacement chordae tendinae according to an embodiment of the invention; and

[0044] FIGS. **18**A-**18**B are front views of a heart, in cross section, with a suture delivery catheter deploying suture through papillary muscle tissue according to an embodiment of the invention.

DETAILED DESCRIPTION OF PREFERRED EMBODIMENTS

[0045] With reference to FIG. **1**, a device **10** according to the invention is depicted deployed within a heart **12**. The heart **12** has four chambers, known as the right atrium **14**, right ventricle **16**, left atrium **18**, and left ventricle **20**. In the particular embodiment depicted, the device **10** is deployed in the left ventricle **20**. The heart **12** has a muscular outer wall **22**, with an interatrial septum **24** (not visible in FIG. **1**) dividing the right atrium **14** and left atrium **18**, and a muscular interventricular septum **26** dividing the right ventricle **16** and left ventricle **20**. At the base of the heart **12** is the apex **28**.

[0046] Blood flows through the superior vena cava **30** and the inferior vena cava **32** into the right atrium **14** of the heart **12**. The tricuspid valve **34**, which has three leaflets **36**, controls blood flow between the right atrium **14** and the right ventricle **16**. The tricuspid valve **34** is closed when blood is pumped out from the right ventricle **16** to the lungs. Thereafter, the tricuspid valve **34** is opened to refill the right ventricle **16** with blood from the right atrium **14**. Lower portions and free edges **42** of leaflets **36** of the tricuspid valve **34** are connected via tricuspid chordae tendinae **44** to papillary muscles **46** in the right ventricle **16** for controlling the movements of the tricuspid valve **34**. Blood from the right ventricle **18** is pumped through the pulmonary valve **38** to the pulmonary artery **40** which branches into arteries leading to the lungs.

[0047] After exiting the lungs, the newly-oxygenated blood flows through the pulmonary veins **48** and enters the left atrium **18** of the heart **12**. The mitral valve **50** controls blood flow between the left atrium **18** and the left ventricle **20**. The mitral valve **50** is closed during ventricular systole when blood is ejected from the left ventricle **20** into the aorta **52**. Thereafter, the mitral valve **50** is opened to refill the left ventricle **20** with blood from the left atrium **18**. The mitral valve has two leaflets (anterior leaflet **54***a* and posterior leaflet **54***p*), lower portions and free edges **56** of which are connected via mitral chordae tendinae **58** to papillary muscles **60** in the left ventricle **20** for controlling the movements of the mitral valve **50**. Blood from the left ventricle **20** is pumped by power from the musculature of the heart wall **22** and the muscular interventricular septum **26** through the aortic valve **62** into the aorta **52** which branches into arteries leading to all parts of the body.

[0048] With reference now to FIGS. **2**A-**2**C, for purposes of illustration, various embodiments of a treatment device **10** are shown. In the depicted embodiments, the treatment device **10** generally comprises an anchor **70** and an elongate member **72**. The anchor **70** provides a mechanism for attaching the device to an inner heart wall or other deployment site without requiring the use of a suturing needle. The elongate member **72** is coupled to the anchor **70**, such as by being looped therethrough or by other attachment thereto. In various applications, as will be described in more detail below, the elongate member **72** may be used for replacing a damaged or ruptured chordae tendinae or may be used for pulling a heart wall inward to reduce dilation of a heart wall. Features of anchors and elongate members according to various embodiments of the invention will be described in more detail below.

[0049] In the particular embodiment of FIG. **2**A, the elongate member **72** comprises a thread **74** terminating at either end **76** in hooks or needles **78**. The thread **74** passes through a hoop-like structure **80** on the anchor **70**. The hooks or needles **78** on the free ends **76** of the thread **74** provide a physician or other user with the ability to penetrate tissue in the heart or elsewhere for fixing the free ends **76** of the elongate member **72**.

[0050] Note that the thread **74** or other elongate member could terminate at free ends **76** without books, as depicted in FIG. **2**B, which could be useful where one or more of the free ends **76** are to be passed through tissue using a detachable needle **82** or similar suturing device. Also, an elongate member **72**, such as one or more threads **74**, could be secured permanently or through other methods to the anchor **70**, such as being secured directly and fixedly to the attachment point **84** depicted in FIG. **2**C.

[0051] A thread portion of a device **10**, such as the thread **74** depicted in FIGS. **2**A-**2**C, may be formed of various materials, including PTFE (polytetrafluoroethylene, aka Gore-tex®), polypropylene (e.g. Prolene), or other suture materials such as Ti-crone or Ethibond. The hooks or needles could be attached to the threads according to known techniques, including techniques applied by suture material producers.

[0052] FIG. **3**A depicts a further embodiment of the invention, wherein the elongate member **72** comprises a rod-like structure **86**. In the particular embodiment depicted, the rod-like structure **86** is generally cylindrical, although other configurations are also possible. The rod-like structure **86** may be solid or hollow, depending on the particular configuration and application. The rod-like structure **86** may be generally rigid or may be generally flexible, or may be configured to be partially rigid but still have some flexibility so that it acts as a shock-absorbing structure when under compression.

[0053] FIG. **3**B depicts a further embodiment of the invention, wherein the elongate member **72** comprises a rod-like structure **86** having a magnet **88** secured at the free end **76**. The magnet **88** might be used to pick up the elongate member **72** (in the form of a rod **76** or thread, etc.) at a later point of time, e.g., after the anchor has been deployed and grown solid into the tissue and the user desires to pull hard on the elongate member **72**. The magnet **88** might be used to change an attached part of a device after a long time has passed, such as where the attached part is degenerated and has to be changed (e.g. a lock or a valve). The magnet **88** may also be used as a guiding aid, for instance when homing in and locking an elongate member (such as a thread) in a lock under open or percutaneous operations when the heart is beating and full of blood.

[0054] With reference now to FIGS. **4**A and **4**B, for purposes of illustration a particular embodiment of an anchor portion **100** is described in more detail. The anchor portion

100 comprises a tubular body **102** having a distal end **104** and a proximal end **106**, with a plurality of elongated prongs **108** located on the distal end **104** and a coupling member **110** located on the proximal end **106**. In the illustrated embodiment, the coupling member **110** takes the form of a loop.

[0055] The elongated prongs **108** may be configured to self-expand from the compressed configuration of FIG. **4**A to a "flowered" or expanded configuration of FIG. **4**B. This expansion may be achieved with a self-curving area **112** that deflects the elongated prongs **108** radially outward from the center of the generally tubular body **102**. The prongs **108** may be pointed and/or barbed to facilitate penetration of and engagement with the muscular wall of the heart.

[0056] The anchor portion **100** may be formed from various materials and/or combinations thereof. In one embodiment, the anchor portion **100** is formed from a single tube of shape memory material, such as, for example, Nitinol. During manufacture, the shape memory material (or other material forming the anchor portion **100**) may be cut using a mechanical or laser cutting tool. After cutting the tube, the expanded or flowered shape can be imparted to the memory of the shape memory material with techniques known in the art (e.g. heat setting the shape). Note, however, that the anchor **100** is not limited to construction from Nitinol or other shape memory materials, and could be formed from any number of materials, including metals, plastics, composite structures, etc.

[0057] All or part of the surface of the anchor portion **100**, including the prongs **108**, may be configured to promote tissue growth onto and even into its surface. In one example this growth is achieved by providing a relatively rough and/or porous surface along the anchor portion **100**. Another example is to have one or multiple holes **114** drilled through the anchor portion **100** and its prongs **108**, allowing scar tissue fibrocytes to grow through these holes **114** and thereby add strength to the fixation. Additionally, biological coatings of the types known in the art can be included on the surface of the anchor portion **100** to promote healing and tissue growth.

[0058] With reference to FIGS. **5**A-**5**D, a method of deploying an anchor **100** will be described in more detail. As shown in FIG. **5**A, an anchor portion **100** is secured within a distal end portion **120** of an anchor delivery catheter **122**. The distal end portion **120** includes a distal end sheath **124** that surrounds the anchor portion **100** and maintains the anchor portion **100** in a compressed configuration during delivery to a treatment site. The anchor delivery catheter **122** may also includes an expandable structure such as an expandable balloon **126**, which in the embodiment depicted is positioned around a portion of the distal end sheath **124**.

[0059] Using the illustrated delivery system, the anchor delivery catheter distal end portion **120** containing the anchor portion **100** is advanced through a chest wall and through the cardiac tissue (or through other delivery routes) into a desired heart chamber. When the anchor portion **100** and surrounding distal end sheath **124** are advanced just in front of the orifice of the valve to be treated (such as a mitral valve or a tricuspid valve), the expandable balloon **126** can be expanded, as depicted in FIG. **5**B. The expandable balloon **126** when expanded may be just a little smaller than the valve orifice, but larger than the distance between chordae tendinae and allow advancement of the anchor delivery catheter distal end portion **120** past the chordae tendinae and other sub-valvular structures by preventing the anchor delivery catheter distal end portion **120** from becoming entangled within or otherwise passing between such structures in an undesired manner.

[0060] When the anchor delivery catheter distal end portion **120** is advanced such that the anchor portion **100** is properly positioned at a desired target location within the heart, the distal end sheath **124** opening remains in contact with the target location while the anchor portion **100** is pushed distally with respect to the distal end portion **120** by means of pushing on the rod **86** or **72** at the proximal end of the delivery catheter **122**, as illustrated in FIGS. **5**C and **5**D. As the anchor portion **100** is exposed to the tissue, the prongs **108** expand outwardly. In some embodiments, the expansion of the prongs **108** to tissue may advantageously pull the anchor portion **100** out of the anchor delivery catheter **122** and outer sheath **126** and dig into the tissue by its inherent force. A light push forward on the delivery catheter **122** can enable a continuous tissue contact of the delivery catheter orifice **124** to ensure tissue contact with the prongs **108**

[0061] After being released from the outer sheath **126**, the prongs **108** on the anchor portion **100** may continue to expand, bending back around towards the generally tubular body **102** while grabbing nearby heart tissue. This tissue-engaging action by the prongs **108** can help to maintain the anchor portion **100** in a stable position within the heart that resists movement due to heart beats, blood flow, and similar actions. In this respect, the anchor portion **100** may at least partially "self-deploy" within the heart, requiring little or no extra pressure from the anchor delivery catheter **122** to anchor within the muscular wall of the heart. Note that although FIGS. **5**C and **5**D depict the expandable balloon **126** in a deflated condition during deployment (which may be preferable in some applications), the expandable balloon **126** (if present) may alternatively be left inflated during deployment of the anchor portion **100**

[0062] In the embodiments of FIGS. **5**A-**5**D, the elongate member **72** took the form of an elongated rod-like structure **86** secured to the anchor portion **100** via an anchor portion connection in the form of a screw-like connection **130**. The elongated rod-like structure **86** can be relatively thick and configured to transmit axially rotational movement along its length. When the user desires to remove the elongated rod-like structure **86**, the user can rotate a proximal portion of the elongated rod-like structure **86** (or a proximal portion of a wire secured to the proximal end of the elongated rod-like structure **86**, wherein the wire may be positioned outside of the patient's body), thereby causing a corresponding rotation of the distal portion of the elongated rod-like structure **86** and the screw-like connection **130** to the anchor portion **100**. This rotation will essentially unscrew the screw-like connection **130**, thereby disconnecting the elongated rod-like structure **86** from the anchor portion **100**.

[0063] The elongate member **72**, such as the elongated rod-like structure **86** depicted, can also serve to retract the anchor portion **100** back into the distal end sheath **124** during or after deployment thereof. For example, in the event that the user is not satisfied with the initial deployment of the anchor portion **100**, the user can pull on the elongated rod-like structure **86** while holding still or even advancing the distal end sheath **124**. As the anchor portion **100** is drawn back into the distal end sheath **124**, inward pressure on the prongs **108** from the distal end sheath **124** will cause the prongs **108** of the anchor portion **100** to collapse inwardly, thereby collapsing the anchor portion **100** back to its delivery (i.e., predeployment) condition as the anchor portion **100** is pulled back into the distal end sheath **124**. The user can then redeploy the

anchor portion **100** in a new position, or can remove the anchor portion **100** entirely from the patient.

[0064] Note that the anchor portion can be implanted without having the elongate member attached thereto during the implantation procedure. In such embodiments, the elongate member could be secured to the anchor portion after the anchor portion is deployed. In another embodiment, the anchor portion can be deployed with an elongate member secured thereto, but then after the implantation a surgeon or other user could remove the original elongate member and replace it with a substitute elongate member. Also, if a relatively stiff elongated member **86** with a screw attachment **130** to the anchoring portion **100** is used, a thread elongated member **72** may be attached to the anchoring portion permanently while the stiff elongated member **86** is detached.

[0065] FIG. **6** depicts an embodiment of a chordae tendinae replacement procedure using a device **10** according to an embodiment of the invention, wherein an anchor **100** is shown after deployment in a papillary muscle **60**, thereby completing the first stage of the implantation procedure. The two free ends **76** of the suture threads **74** can then be passed (via, e.g., needles **78**) through a leaflet (which is a posterior leaflet **54***p* in the particular embodiment depicted) of the mitral valve **50** (or other tissue, depending on the particular application) by the surgeon or other user. After determination of the length of the hereby created chordae tendinae, the threads **74** are knotted or locked by other fixation means like a suture clip or locking mechanism. Note that the device could be used to replace chordae tendinae of the posterior leaflet **54***p* and/or anterior leaflet **54***a* of the mitral valve **50**, or of any other leaflet of other valves.

[0066] With reference to FIG. **7**, in ischemic heart disease caused by clogged arteries to the heart muscle, a papillary muscle **60** may have moved away from the mitral valve annulus **51** and thereby be pulling the corresponding leaflet down into the ventricle. The two leaflets **54***a*, **54***p* can no longer meet properly, and regurgitation through the valve **50** may occur. In such a case, the anchor can be deployed at or adjacent to the papillary muscle, and one or more of the suture ends **76** may be attached to the valve annulus **51** (instead of to the valve leaflets **54***a*, **54***p*), thereby shortening the distance between the displaced papillary muscle **60** and the annulus **51** and thereby allowing the leaflets **54***a*, **54***p* to meet again and the valve **50** to again be competent.

[0067] FIGS. **8**A and **8**B depict a method of treating myocardial infarction, a condition which occurs regularly after blockage of the arteries, resulting in heart muscle cell death. As a result thereof, in many cases a weakening of a portion of the heart wall **22** or other structure may occur, with a corresponding bulge or other structural deformation to the heart portion. For example, in a heart **12** having a weakening of the heart wall **22** in the areas adjacent the left ventricle **20**, a considerable dilation or bulge can occur in the left ventricular wall area **23**. With each heart contraction in systole, the left ventricle **20** will bulge outwards instead of properly contracting, causing less blood to leave into the aorta and thereby causing low cardiac output and heart failure. The current invention may be used to treat this condition. As illustrated in FIG. **8**A, in one method of use multiple anchors **100** may be deployed in the left ventricular wall area **23**. The suture threads **74** can be collected in the center by means of a knot or other locking mechanism (such as a suture clip **140**) and each thread **74** may be pulled inwards toward the center until the bulging is adequately reduced. The suture threads **74** or other elongate members are then locked via the knot or other locking mechanism to maintain the left ventricle **20** in the reshaped condition, as depicted in FIG. **8**B.

[0068] FIG. **8**C illustrates an alternative configuration for treating a weakened heart wall area **23**, wherein the threads **74** are pulled and locked at a location outside of the heart wall **22**. In the particular embodiment depicted, the suture clip **140** is positioned at the apex **28**.

[0069] FIG. **8**D illustrates a further embodiment of the invention, wherein the suture threads **74** are passed through the ventricular septum **26** and into the right ventricle **16**. The suture threads **74** are then collected on the opposite (i.e., right ventricle) side of the ventricular septum **16**, and each thread **74** may be pulled until the bulging is overcome. The suture threads **74** can then be locked in the desired position by means of a locking mechanism, such as the suture clip **140** depicted A similar treatment may also be applied to papillary muscles that have dislocated outwards due to myocardial infarction, thereby causing the mitral valve to leak. A thread or threads may be passed through the papillary muscle and then through the ventricular septum. As the thread or threads are tightened, they will cause inwards movement of the papillary muscle and thereby cause the mitral valve to be competent again, at which point the thread or threads can be locked on the right side of the septum by means of a locking mechanism, e.g., a knot or other fixation mechanism.

[0070] With reference now to FIG. **9**, another alternative embodiment is illustrated wherein the anchor **100** is deployed inside a papillary muscle **60**, and the elongate member **72** (e.g., suture thread **74**) is locked via a suture clip **140** inside the right atrium **14**, e.g., at a location close to the annulus **51** of the mitral valve **50**, thereby pulling the papillary muscle **60** toward the annulus **51** and relieving pressure on the chordae tendinae **58**. Such a suture arrangement could treat left ventricular bulging, papillary muscle displacement and mitral regurgitation simultaneously.

[0071] With reference to FIG. **10**A, another alternative embodiment is illustrated wherein an anchor **100** is deployed in the heart wall **22** just below the mitral valve **50**, and the suture thread **74** (or other elongate member) is locked via a suture clip **140** in the right ventricle **16** on the interventricular septum **26**, with tension in the suture thread **74** pulling the posterior mitral leaflet **54***p* from lateral towards the interventricular septum **26** and thereby shortening the antero-posterior diameter of the mitral valve annulus **51** to repair a mitral valve leak. Similarly (not shown) an anchor may be deployed in the heart wall adjacent the left atrium, just above or otherwise adjacent the mitral valve, adjacent to or in the mitral valve annulus, and the suture thread (or other elongate member) can be locked via a suture clip in the right atrium on the atrial septum, with tension in the suture thread pulling the posterior mitral leaflet from lateral towards the atrial septum and thereby shortening the antero-posterior diameter of the mitral valve annulus to repair a mitral valve leak.

[0072] With reference to FIG. **10**B, yet another embodiment is illustrated wherein the anchor **100** is located adjacent the mitral valve **50**. The particular embodiment of FIG. **10**B depicts anchor deployment in the interventricular septum **26**, although other deployment locations (such as in the heart wall **22** in an area adjacent an upper portion of the left ventricle **20**) are also within the scope of the invention. The anchor **100** may be deployed by means of a catheter (such as the delivery catheter **122** from FIGS. **5**A-**5**D) from inside the coronary sinus **25**. With the catheter distal end **120** positioned in a distal

portion of the coronary sinus (or other desired deployment location) and the opening of the distal end sheath **124** held against the inner wall of the coronary sinus, the anchor **100** can be advanced out of the distal end sheath **124** so the prongs **108** are exposed to the coronary sinus wall and released to dig into the left ventricular wall **22** through the coronary sinus wall. The elongate member **72** in the form of a suture thread **74** passes from the anchor **100** and runs along the inside of the coronary sinus and extends out from the ostium **27** of the coronary sinus **25** into the right atrium, thereby at least partially encircling the mitral valve annulus **51**. The free end **76** of the suture thread **74** is locked in or outside of the coronary sinus **25** by means of a suture knot or lock (not shown), pulling the mitral valve posterior leaflet **54***p* from lateral towards the interatrial septum **24** and thereby shortening the antero-posterior diameter of the mitral valve annulus **51** to repair a mitral valve leak.

[0073] Those skilled in the art will appreciate that the treatments described herein may demand robust attachment strength. For example, when treating dilation of the left ventricle, the forces on the threads and the anchors are large due to the high blood pressure in the left ventricle and the high wall stress due to the large diameter of the bulging sack. In such cases, a two stage procedure might be preferred. For two-stage procedures (i.e., procedures where the anchor is deployed separately from the elongate member), the device may be provided with a coupling member to attach and/or release the elongate member to/from the anchor. The coupling member provides a point of attachment for connecting an elongate member, such as a suture thread, to the anchor during a second or later implantation stage. During the second stage, the thread portion may be delivered into the heart by means of a catheter-based technique, similar to that described above with respect to FIGS. **5**A-**5**D. However, in the second stage of a multi-stage delivery, the elongate member is delivered into the heart using a delivery catheter and is subsequently coupled to the previously-deployed anchor or to a first part of another elongate member already attached to a coupling member of the pre-deployed anchor.

[0074] With reference now to FIG. **11**, an anchor portion **100** is shown some time after anchor deployment into the muscular heart wall **22** of the left ventricle **20** (i.e., after the first stage of the implantation procedure). After implantation in the heart **12**, endocardial tissue **150** has grown over the exposed tubular portion **152** of the anchor portion **100** that is protruding from the muscular wall **22** into the left ventricle **20**, preferably leaving only the anchor coupling member **110** exposed within the left ventricle **20**. Simultaneously, inside the heart wall **22** around the embedded portions of the anchor portion **100** a scarring healing takes place, wherein fibrocytes create strong scarring tissue surrounding the prongs **108**, thereby integrating them with the muscle of the heart wall **22** to create a very strong attachment. It has been found that adequate tissue overgrowth on the exposed areas of the anchor portion **100** and the scar healing around the prongs **108** may occur in two or three weeks. However, the amount of time required may depend on various factors, such as the location of the anchor portion **100** within the heart **12**, the surface features or coatings of the anchor portion **100**, and finally the health status and other characteristics of the patient.

[0075] The coupling member **110** provides a point of attachment for connecting an elongate member **72** (such as the suture threads **74** and rod-like members **86** previously described embodiments) during a second or later implantation stage. Note that FIG. **11** does not depict an elongate member (such as a suture thread **74** or rod-like member **86** from earlier embodiments) as being present—the reason being that the elongate member is to be attached as a second or later stage of a multi-stage procedure. While a user may be able to couple the elongate member to the previously-deployed anchor portion by simply searching around the patient's heart, additional techniques can be used to facilitate this procedure. For example, both the coupling member on the anchor and an attachment mechanism of the thread portion may be magnetized, thereby allowing the two to be drawn together when in close proximity. In still another example, a vacuum-assisted connection can be used to facilitate connection of the elongate member to the anchor. As another example, anchor lines could be used, such as where an anchor line (e.g., a suture thread) is left secured to the coupling member of the anchor during the first implantation stage (i.e., anchor deployment) and left within the patient for use during the second stage (i.e., attaching the elongate member to the anchor). During the second implantation stage, the locking mechanism of the elongate member portion can be advanced along the guide element (e.g., originally-deployed suture thread or wire, etc.) until the locking mechanism reaches the coupling member of the previously-deployed anchor.

[0076] During the second or later stage, the elongate member **72** may be delivered into the heart using a multi-stage procedure similar to that depicted in FIGS. **12**A-**12**D) wherein an anchor portion **100** is deployed in the first stage, and then the elongate member **72** is advanced to the site and connected to the anchor portion **70** in situ.

[0077] In FIG. **12**A, an anchor deployment catheter **160** is shown having a distal end **162** advanced to a desired deployment site within the left ventricle **20**. The anchor portion **100** is positioned at the anchor deployment catheter distal end **162**, and more specifically is contained within the anchor deployment catheter distal end **162**. The anchor portion **100** includes multiple anchor members **108** configured to expand outward and embed within the heart tissue when released from the anchor deployment catheter **160**, which can be accomplished by pushing the anchor portion **100** out of the anchor deployment catheter **160** and/or withdrawing the anchor deployment catheter **160** from around the anchor portion **100**.

[0078] In FIG. **12**B, the anchor portion **100** has been deployed, with the anchor members **108** embedded into the heart tissue in the lower portion of the left ventricle **20** adjacent the apex **28**. The anchor portion **100** has a top portion **152** having an anchor connector **110** configured to received a mating connector from an elongate member which will be deployed in the second stage (discussed below). The anchor portion **100** also includes an anchor line opening **164**, which is a loop or lumen through which an anchor line **166** can be passed. The particular anchor line **166** depicted in FIG. **12**B is a line of suture that passes into the patient and into the heart **12**, passes through the anchor line opening **164**, and then passes back out of the heart **12** and the patient to form a double suture line. As the anchor deployment catheter **160** is removed from the heart **12**, the anchor line **166** is left trailing from the anchor portion **100** and out of the heart **12** and patient. While allowing the anchor portion **100** to heal in over some time, the free ends of the anchor line might also be left under the skin of the patient and then retrieved when needed.

[0079] FIG. **12**C depicts the second stage of the deployment procedure, wherein the elongate member **72** is advanced into the heart **12** and secured to the anchor portion **100**. A second deployment catheter **170**, to which is secured an elongate member **72**, is advanced to the area in the left ventricle **20** at or adjacent the previously-deployed anchor portion **100**. In the particular embodiment depicted, the second deployment catheter **170** is an over-the-wire type catheter having an inner lumen configured to permit the anchor line **166** to slidingly pass therethrough. Note, however, that a so-called rapid-exchange type of delivery catheter could also be used. The second deployment catheter **170** includes a canopy container in the form of a side pocket **174** configured to contain and restrain the elongate member **72** during delivery.

[0080] As depicted in FIG. **12**C, the second deployment catheter **170** is advanced along the anchor line **166** to the anchor portion **100**. The elongate member **72** includes a distal end **176** having a connector **178** configured to be secured to an anchor portion connector **110** on the exposed upper surface **152** of the anchor portion **100**. As the second deployment catheter **170** is advanced along the anchor line **166**, the elongate body portion distal end **176** and connector **178** will be led into alignment and contact with the anchor portion connector **110**. When the elongate body portion connector **178** contacts the anchor portion connector **110**, the two connectors **110**, **178** are connected together. Note that many different types of connectors are within the scope of the invention, and the particular connectors used with a particular device may be a matter of choice. The connectors may be snap-type or quick-connect connections which automatically connect when the two connectors are brought into contact. The connectors may be manually operated, and/or may include a release device to permit disconnection at a later time.

[0081] Connection of the two connectors **110**, **178** effectively secures the anchor portion **100** to the elongate member **72**. Once the two connectors **110**, **178** are connected, the second deployment catheter **170** can be withdrawn, which will release the elongate member **72** from the side pocket **174** to deploy the elongate member **72**, as depicted in FIG. **12**D. In the particular method depicted, the anchor line **166** is still depicted in position passing through the anchor line loop **164** (although the anchor line **166** could have been removed along with, or even prior to, removal of the second deployment catheter **170**). The anchor line **166** can now be removed, which in the case of the double suture line depicted can involve releasing one end of the line that passes outside of the heart, and pulling on the other end passing outside the heart. The loose end of the double suture line will thus be pulled into the heart **12** and will be pulled out of the anchor line loop **164**, thus releasing the anchor line **166** from the anchor portion **100**. The free end **76** of the elongate member **72** can be secured to the desired tissue (e.g., a valve leaflet) to complete deployment of the device **10**. The opening **92** through which the catheters **160**, **170** were advanced into and removed from the heart **12** can be closed using a purse-string suture **94**.

[0082] Note that a two-stage deployment device and method such as that depicted in FIGS. **12**A-**12**D could be useful for situations where a user may desire to replace an initially-deployed elongate member. For example, if after the device is entirely deployed in a patient's heart, a user may determine that the initially-deployed elongate member is not of the optimal size/configuration or not optimally secured to desired tissue. Such situations may arise where one or more portions of the patient's heart (e.g., the valve, etc.) has deformed since the initial deployment procedure. In such a situation, a user could remove the initially deployed elongate member while leaving the anchor portion in place. The user could then attach another elongate member to the anchor portion, and secure the free ends of the elongate member as desired. Alternatively, the user could simply leave the initial anchor portion in place without attaching another elongate member thereto. The user could also deploy a second elongate member using a second anchor portion.

[0083] Deployment of the device and/or of specific elements thereof, including navigation of the elongate member to connect to a previously-deployed anchor, can be facilitated with cameras, X-rays, or similar techniques which allow the user to visualize the device elements within the patient.

[0084] FIG. **13**A depicts a suture deployment device **200** for use in deploying an elongated member, such as a suture line, into a valve leaflet. The suture deployment device **200** comprises an elongated body **202**, a proximal end **204** having a handle **206**, and a distal end **208**.

[0085] FIGS. **13**B-**13**C depict a close-up views of the distal end **208** of the suture deployment device **200**. A vacuum port **210** is positioned on a side of the distal end **208** and is in fluid communication with a suction lumen **212** passing the length of the suture deployment device and configured to be attached at the device proximal end **204** to a vacuum source (not shown). The vacuum applied to the vacuum port **210** is controlled by a user via one or more controls **214** positioned on the handle **206**. Two needles **216***a*, **216***b* are positioned in needle lumens **218***a*, **218***b* and configured to be advanced and retracted across the vacuum port **210**. The needles **216***a*, **216***b* may be independently controlled for separate advancement and retraction. In the particular embodiment depicted, the needles **216***a*, **216***b* are coupled to or otherwise in communication with actuators **220***a*, **220***b* located on the device handle **206**. The forward and rearward movement of the actuators **220***a*, **220***b* results in corresponding longitudinal movement of their respective needles **216***a*, **216***b*, thereby permitting the first and second needles **216***a*, **216***b* to extend from and retract into the first and second needle lumens **218***a*, **218***b* via first and second needle ports **222***a*, **222***b*. Those skilled in the art will appreciate that the first and second needles **216***a*, **216***b* may be capable of individual and/or simultaneous movement.

[0086] A guidewire lumen **224** configured to receive a guidewire **226** or similar guide line therein may be positioned in the suture deployment device **200**, and may pass the length of the device (in a so-called over-the-wire configuration) or may pass only through a portion of the distal end and exit through a side just proximal of the distal end (in a so-called rapid-exchange configuration).

[0087] As depicted in FIGS. **13**B-**13**C, first and second needle-receiving ports **228***a*, **228***b* may be positioned within or proximate the vacuum port **210** and co-aligned with and opposing the first and second needle ports **222***a*, **222***b*, respectively. The first needle-receiving port **228***a* is in communication with the first suture lumen **230***a* and contains a first needle catch **232***a* attached to the first suture portion **234***a* that passes into the first suture lumen **230***a*. Similarly, the second needle-receiving port **228***b* is in communication with the second suture lumen **230***b* and contains a second needle catch **232***b* attached to the second suture portion **234***b* that passes into the second suture lumen **230***b*.

[0088] Depending on the particular application, the first and second suture portions **234***a*, **234***b* may be entirely separate suture lines, or may comprise opposing portions of a

single common suture line that forms a loop between the first needle catch **232***a* and the second needle catch **232***b*. If the first and second suture portions **234***a*, **234***b* are part of a single common suture line, the first and second needle-receiving ports **228***a*, **228***b* may form a single opening, and the first and second suture lumens **230***a*, **230***b* may form a single lumen, in order to permit the single common suture line loop to exit freely from the suture deploying device **200**

[0089] FIGS. **14**A-D depict a method of using the suture deployment device **200** of FIGS. **13**A-**13**C to deploy suture line through a valve leaflet to create a replacement chordae tendinae. In FIG. **14**A, the suture deployment device **200** is introduced into a patient's body until the distal end **208** is advanced into the heart **12**, and more specifically (in the particular embodiment depicted) to a position where the vacuum port **210** is adjacent the posterior mitral valve leaflet **54***p*, in which one of the several chordae **58** has ruptured into two separate pieces **58***a*, **58***b*.

[0090] In the particular embodiment depicted in FIG. **14**A, the suture deployment device **200** has been advanced percutaneously in a trans-septal approach, using a guide catheter **240**, via the inferior vena cava **32** and right atrium **14** and through an opening **242** in the atrial septum **24** (or through a patent foramen ovale, not shown) into the left atrium **18** to the desired position adjacent the valve leaflet **54***p*, which in the particular embodiment depicted is a posterior leaflet of the mitral valve **50**. Note, however, that other approaches are also within the scope of the invention, including other percutaneous and minimally invasive approaches, such as approaches via the aorta, superior vena cava, or directly through the outer heart wall, etc. Note also that the same procedure may be used for attachment to an anterior leaflet of the mitral valve.

[0091] In FIG. **14**B, the suture deployment device **200** uses the vacuum port **210** to grasp the valve leaflet **54***p*. With the valve leaflet **54***p* firmly held by the vacuum port **210**, the suture deployment device **200** advances a needle **216***a* through the valve leaflet tissue **244**, with the needle **216***a* engaging against and becoming secured to a needle catcher **232***a* on the far side of the valve leaflet tissue **244** and vacuum port **210**, as depicted in FIG. **14**C. The needle **232***a* is then withdrawn back through the valve leaflet tissue **244**, thus dragging the needle catcher **232***a* and attached suture line portion **234***a* back through the valve leaflet tissue **244**, as depicted in FIG. **14**D. The device distal end **208** is then moved away from the valve leaflet **54***p*, with the suture line portion **234***a* trailing out of the device **200**, as depicted in FIG. **14**E.

[0092] Similar devices to that depicted and described with respect to FIGS. **14**A-**16**E are depicted and described in pending U.S. patent application Ser. No. 10/389,721, filed on Mar. 14, 2003 and entitled "Mitral Valve Repair System and Method for Use," the entire contents of which are hereby incorporated by reference.

[0093] FIG. **15** depicts an embodiment wherein an anchor **100** has previously been deployed in a papillary muscle **60** (e.g., using devices and methods such as those previously described with respect to FIG. **11**, etc.), with an elongate member portion in the form of a papillary-anchored suture line **250** passing from the anchor **100** and out of the patient via the left atrium **18**, atrial septum **24**, right atrium **14**, and inferior vena cava **32**, i.e., along the same path through which the suture deployment device **200** was advanced in FIGS. **14**A-**14**E. In such an embodiment, the previously-deployed papillary-anchored suture line **250** can actually serve as a guide line over which the suture deployment device **200** can be advanced similar to the technique of FIGS. **14**A-**14**E, but with the papillary-anchored suture line **250** serving as a guide line there may be no need for a guide catheter **240** such as that depicted in FIGS. **14**A and **14**E.

[0094] With a previously-deployed anchor **100** and papillary-anchored suture line **250** already in place as in FIG. **15**, the suture deployment device **200** can, after having passed a leaflet-secured suture line **234** through a valve leaflet **54***p*, be withdrawn from the patient as shown, with the leaflet-secured suture line **234** trailing out of the suture deployment device **200** and eventually out of the patient once the suture deployment device is completely withdrawn from the patient.

[0095] In FIGS. **16**A-**16**D, an embodiment of a suture securing and cutting device **260** is depicted. The fastener catheter **260** has a generally tubular main body **262**, a proximal end **264**, and a distal end **266**. The proximal end **264** includes a handle knob **268**. The distal end **266** includes a suture clip **270** positioned thereon. The fastener catheter **260** may be manufactured in a variety of shapes, sizes, lengths, widths, and biologically-compatible materials as desired for a particular application.

[0096] The generally tubular main body **262** has a longitudinal inner lumen **272** therethrough which terminates in a distal opening **274**. A longitudinally slidable inner body **276** is slidably positioned within the main body **262**. The inner body **276** includes an inner tubular member distal end **278** which extends out of the main body distal opening **274**. The inner tubular member distal end **278** itself includes an inner tubular member distal opening **280**, which leads to an inner body lumen **282**. These and other features are depicted in additional detail in FIGS. **16**B-**16**D, which illustrate (in exploded fashion in FIGS. **16**B-**116**C, and assembled in FIG. **16**D), distal portions of the fastener catheter **260**.

[0097] The inner body **276** includes a suture recess **284** formed in the side thereof, which in turn is in communication with the inner body lumen **282**. Inner body **276** also includes a pin **286** extending radially outward therefrom. The main body **262** has a cutting recess **288** formed in an axial side thereof and a cutting member **290** which, in the embodiment depicted, is on a proximal edge of cutting recess **288**. A pin recess in the form of a slot **292** extends parallel to the axis of the main body **262** and radially through to main body lumen **272**. The slot **292** is thus configured to receive pin **286** in sliding relation.

[0098] In FIG. **16**D, the inner body **276** is slidably positioned within main body **262**, such that suture recess **284** is in alignment with cutting recess **288**. Pin **286** is in slidable communication with slot **292** thereby permitting relative linear motion, but preventing relative rotational motion, between inner body **276** and main body **262**. A clip **270** is positioned on the inner body distal end **278**, which protrudes from the main body distal opening **274**. The clip **270** includes a clip distal opening **294**, clip proximal opening **296**, and engagement members **298**. As depicted in FIG. **16**D, the clip **270** has been placed on inner member distal end **278** by deflecting the engagement members **298** radially outward until they can be placed around the outer circumference of inner body distal end **278**. Accordingly, the clip **270** is secured to the inner body distal end **278** by means of the frictional engagement between the engagement members **298** and the outer surface of inner body distal end **278**. Suture **234** extends through the fastener clip **270**, with suture leads **234***a* and **234***b* extending through the clip distal opening **294**, engagement members **298**, and proximal opening **296**, passing through

inner member distal opening **280** and inner member lumen **282**, exiting the inner member **276** via suture recess **284**, and exiting the side of main body **262** through cutting recess **288**.

[0099] Once the clip **270** is advanced to a desired position on the suture line **234**, the inner member **276** can be retracted with respect to the main body member **262**, thereby causing the inner body distal end **278** to be pulled inside the main body member **262**. The clip **270** will thus be pushed off of the inner body distal end **278** by the main body **262**, at which point the clip engagement members **298** move inwardly to block the clip proximal opening **296** and thereby lock the clip **270** onto the suture **234**. The retraction of the inner member **276** with respect to the main body member **262** also causes the suture portions **234***a*, **234***b* to be pinched between the inner member opening **284** and the cutting member **190**, so that the suture portions **234***a*, **234***b* are cut by the cutting member **290**.

[0100] Similar devices to that depicted and described with respect to FIGS. **16**A-**16**D are depicted and described in pending U.S. patent application Ser. No. 10/389,721, filed on Mar. 14, 2003 and entitled "Mitral Valve Repair System and Method for Use"; pending U.S. patent application Ser. No. 11/174,397, filed on Jun. 30, 2005 and entitled "System, Apparatus and Method for Fastening Tissue"; pending U.S. patent application Ser. No. 11/345,208, filed on Jan. 31, 2006 and entitled "System, Apparatus, and Method for Fastening Tissue"; and pending U.S. patent application Ser. No. 11/746,009, filed on May 8, 2007 and entitled "Suture-Fastening Clip"; the entire contents of each of which are hereby incorporated by reference.

[0101] FIGS. **17**A-**17**C depict a method of securing the deployed suture lines **234**, **250** together at a desired length in order to create a replacement chordae tendinae. In FIG. **17**A, the suture securing and cutting device **260** is shown with the distal end **266** being advanced along the previously-deployed suture lines **234**, **250**, with the papillary-anchored suture line **250** serving to guide the suture securing and cutting device **260** into the patient's heart **12** and left ventricle **20**. As the suture securing and cutting device **260** is advanced along the previously-deployed papillary-anchored suture line **250**, the user (such as a surgeon or cardiologist) pulls on the proximal end of the papillary-anchored suture line **250** (which is positioned outside of the patient) to maintain slight tension as the suture securing and cutting device **260** is advanced into the left ventricle **20**. The user may also pull on the proximal ends of the leaflet-secured suture line **234** to prevent it from being pushed into the patient as the suture securing and cutting device is advanced.

[0102] In FIG. **17**B, the suture securing and cutting device distal end **266**, with suture securing clip **270** thereon, is depicted advanced to a desired location in the left ventricle. The user pulls on the papillary-anchored suture line **250** and/or on the leaflet-secured suture line **234** to achieve a replacement chordae tendinae of a desired length. While adjusting the length of the replacement chordae tendinae, the user can monitor the heart function using various devices known in the art, such as fluoroscopy, radiography, ultrasound, etc. In one example, the user can verify the effectiveness of the replacement chordae tendinae length by monitoring blood flow using radiopaque dyes combined with fluoroscopy or by means of ultrasound. When the user sees via the heart function monitoring system(s) that the heart valve is functioning as desired, the user then knows that the replacement chordae tendinae (formed by the sutures **234**, **250**) is at the appropriate length. The user can then activate the suture securing and cutting device **266** to release the suture clip **270** so that it secures the sutures **234**, **250** at the desired position, thereby forming the desired replacement chordae tendinae. The user also activates the suture securing and cutting device **266** to cut the excess suture portions away adjacent the clip **270**.

[0103] FIG. **17**C depicts the clip **270** deployed and the excess portions **234***e*, **250***e* (i.e., portions proximal of the clip **270**) of the suture lines **234**, **250** having been cut. The suture securing and cutting device **266** is being withdrawn from the patient, along with the excess cut-off suture portions **234***e*, **250***e*. The deployed suture lines **234**, **250** are held firmly by the clip **270** to serve as a replacement chordae tendinae.

[0104] In a further embodiment of the invention, the suture deployment device **200** can be used to secure the suture line **234** directly to the papillary muscle or other heart tissue, and/or to a previously-deployed anchor. For example, in one such embodiment the suture deployment device is used to deploy the suture line **234** through the papillary muscle **60**, as depicted and described with respect to FIGS. **118**A-B.

[0105] FIG. **18**A depicts the suture deployment device **200** having already passed a one portion of suture line **234***a* through a valve leaflet **54***p* (as was depicted in FIGS. **14**A-**14**E), and then being maneuvered so that the distal end **208** and vacuum port **210** positioned adjacent a papillary muscle **60** and the vacuum activated, so that the papillary muscle **60** has been grasped and held by the vacuum port **210**. As the suture deployment device distal end **208** is moved from its previous position adjacent the valve leaflet **54***p* (i.e., the position depicted in FIGS. **14**A-D), the leaflet-secured suture line **234***a* plays out from the suture deployment device **200**. A needle from the suture deployment device is used to pass a second suture line **234***b* through the papillary muscle **60**, using an apparatus and technique such as that depicted in FIGS. **14**B-**14**D that was used to pass the leaflet-secured suture line **234***a* through the leaflet **54***p*. For example, using a device such as that depicted in FIGS. **13**A-**13**C, needle **216***a* could be used to pass the leaflet-secured suture line **234***a* through the leaflet **54***p*, while needle **216***b* could be used to pass the papillary-secured suture line **234***b* through a portion of the papillary muscle **60**.

[0106] Once the papillary-secured suture line **234***b* is secured to the papillary muscle **60**, the vacuum can be discontinued so that the papillary muscle **60** is released from the vacuum port **210**. As depicted in FIG. **18**B, the suture deployment device **200** can then be withdrawn from the patient's heart **12**, with the papillary-secured suture line **234***b* and leaflet-secured suture line **234***a* trailing out from the suture deployment device distal end **208** and eventually trailing out of the patient as the suture deployment device **200** is completely withdrawn. A suture clip can then be advanced over the suture line portions **234***a*, **234***b* and secured at a desired place thereon to create a replacement chordae of the desired length, using devices and methods such as those depicted in FIGS. **16** and **17**A-**17**C.

[0107] Note that the deployment devices and methods depicted and described above can be varied and still fall within the scope of the invention. For example, the leaflet-secured suture line(s) can be secured to the leaflet before, after, or simultaneously with deployment of the papillary-secured suture line(s). The suture deployment device could be used to secure a papillary-secured suture line or lines directly to the papillary muscle, or to an anchor or other device deployed in the papillary muscle. For example, the suture deployment device may have a magnet near its distal end to

assist in guiding the suture deployment device to an anchor that has a magnet. Also note that the suture deploying method and device can vary. For example, the suture deploying device could be configured to drive a pledget, barb-like device or similar structure into the leaflet, papillary muscle, and/or anchor, with a suture line being secured to the pledget, barb-like device, or similar structure. The anchor, suture clip, suture lines, suture deployment device, and/or suture securing/cutting device may include one or more visualization references. For example, visualization references in the form of radiopaque marker bands may be positioned on or adjacent the distal end of the suture deployment device and/or suture securing/cutting device, and/or on the anchor, etc. The radiopaque marker bands are viewable under a fluoroscope, so that a surgeon or other user can use a fluoroscope to visualize the positions of the devices and anchors within the patient and with respect to any devices present, such as guidewires, etc. Depending on the particular application, the visualization markers on a particular device may be identical or may be different from each other. Radiopaque marker bands or other visualization references that provide different radiopaque or other visualization signatures permit a user to differentiate between particular elements (e.g., between an anchor and a suture deployment device, etc.). The efficacy of an implant (or implants) and its deployed position can be confirmed and monitored at various times during and after the deployment procedure via various techniques, including visualization methods such as fluoroscopy.

[0108] Various materials could be used to form the devices of the invention, including the anchors, suture lines, suture deployment devices, and other system components.

[0109] ANIMAL EXPERIMENTS: Two sixty kilograms adult sheep were sedated, anesthetized and connected to mechanical ventilation. A tracheal tube was inserted and the sheep put on the right side on an operating table. Under sterile conditions the chest was opened under the 5th rib and the pericardium was opened. A purse-string suture with a tourniquet was put on the left atrial appendage. A device of the type described above was inserted through the purse-string suture and advanced to the apex of the left ventricle. At this location, the anchor was deployed. Four weeks after the procedure, the sheep were taken back to the animal facility, anesthetized, and sacrificed by means of high dose potassium. The hearts were extracted and inspected. The anchors were found not to have penetrated the left ventricular wall and had remained in the position where they were placed during surgery. At gross inspection the anchors had healed smoothly in normal thin scar tissue and were covered by a thin layer of endothelium. A pull test was performed by pulling in the thread. At a pulling force of 1.6 Kilogram, the anchor tore out the scar tissue with surrounding heart muscle while still being intact inside the chunk of muscle. Thus one could conclude that the healing in into the left ventricular wall was stronger than the muscle itself. Using a third sheep of sixty kilograms, the same surgical procedure was performed. This time the animal was sacrificed immediately and the heart extracted. A pulling test now revealed a fixation force corresponding to a traction of 800 grams before the arms of the anchor bent back and slid out of the still intact muscle. The 800 gram fixation force is redundant to what is needed for strength when attaching a chordae tendinae to a papillary muscle and more than sufficient for treating a dilated ventricular wall.

[0110] Although the invention has been described in terms of particular embodiments and applications, one of ordinary skill in the art, in light of this teaching, can generate additional embodiments and modifications without departing from the spirit of or exceeding the scope of the claimed invention. For example, although the above devices and methods are described for use in a particular manner, the devices and methods described herein could be used in a variety of different methods of use, such as, for example, via open heart surgical access, via a beating heart surgical access (e.g., a trans-apical approach) and via a percutaneous approach. As a further example, it will be recognized that the embodiments described above and aspects thereof may also be used to treat a tricuspid valve or other valves in substantially similar manner. In addition, many modifications may be made to adapt a particular situation or device to the teachings of the invention without departing from the essential scope thereof. Furthermore, the devices and methods could be used for entirely other purposes wherein it may be advantageous to attach a suture to tissue with an anchor rather than using a needle and thread. Examples of such procedures include wound closure and treating organ prolapse. Furthermore, if desired, the anchor and/or thread may be configured to be resorbable such that they dissolve within the body over time. Accordingly, it is to be understood that the drawings and descriptions of specific embodiments herein are proffered by way of example to facilitate comprehension of the invention, and should not be construed to limit the scope thereof.

What is claimed is:

1. A device for deployment within a human heart, comprising:

an anchor member having a delivery configuration and a deployed configuration, the anchor comprising a distal end and a proximal end and having a main body member, the anchor further comprising a plurality of radially-expandable prongs extending from the main body member, wherein the radially expandable prongs include tips, wherein with the anchor in the delivery configuration the plurality of radially-expandable prongs extend generally distally from the main body member, wherein with the anchor in the deployed configuration the plurality of radially-expandable prongs extend generally radially from the main body; and

an elongate member having a first end and a second end, wherein the elongate member first end is secured to the proximal end of the anchor, and the elongate member second end is configured to be secured to heart tissue.

2. The device of claim **1**, wherein the elongate member is releasably secured to the proximal end of the anchor.

3. The device of claim **2**, wherein the elongate member is generally flexible, the anchor comprises an anchor loop at the anchor proximal end, and the elongate member is configured to be secured to the anchor by passing through the anchor loop.

4. The device of claim **1**, wherein the elongate member is generally flexible.

5. The device of claim **4**, wherein the elongate member comprises a needle at or adjacent the elongate portion second end.

6. The device of claim **1**, wherein the elongate member is generally rigid.

7. The device of claim **1**, wherein the elongate member comprises a magnet.

8. The device of claim **1**, wherein the anchor comprises an anchor surface configured to encourage tissue growth onto the anchor.

9. The device of claim **8**, wherein the anchor surface comprises a plurality of holes configured for tissue ingrowth therein.

10. The device of claim **1**, wherein the anchor comprises a memory metal, and the anchor is biased toward the deployed configuration.

11. An assembly for treating a heart, comprising:

a plurality of anchors, each anchor configured for attachment to heart tissue via radially extendable prongs;

a plurality of elongate members having a distal portion and a proximal portion, each elongate member attached to one of the plurality of anchors at the elongate member distal portion; and

a clip locked onto the proximal portions of the plurality of elongate members.

12. The assembly of claim **11** wherein the elongate members are generally flexible.

13. The assembly of claim **12**, wherein one or more of the elongate members comprise suture line.

14. A method for treating a heart, comprising:

securing an anchor to heart tissue at a first location, wherein the anchor comprises a plurality of radially extendable prongs configured to extend into heart tissue;

securing a distal portion of a generally flexible elongate member to the anchor;

securing a proximal portion of the generally flexible elongate member to heart tissue at a second location such that the generally elongate member provides tension between the heart tissue at the first location and the heart tissue at the second location.

15. The method of claim **14**, further comprising:

allowing tissue ingrowth to occur into the anchor, wherein allowing tissue ingrowth occurs prior to securing the proximal portion of the generally flexible elongate member to heart tissue at the second location.

16. The method of claim **15**, wherein allowing tissue ingrowth occurs prior to securing the distal portion of the generally flexible elongate member to the anchor.

17. The method of claim **14**, wherein the first location is in a distal portion of the coronary sinus.

18. The method of claim **17**, wherein the second location is in or proximal of a proximal portion of the coronary sinus, and the generally flexible elongate member extends through at least a portion of the coronary sinus and at least partially encircles a corresponding mitral valve annulus.

19. The method of claim **17**, wherein the anchor is deployed through the distal portion of the coronary sinus and engages against the left ventricular wall through the coronary sinus wall.

20. The method of claim **14**, wherein the first location is in a first chamber of the heart, and the second location is in a second chamber of the heart.

21. The method of claim **14**, wherein securing the anchor to heart tissue at the first location comprises introducing the anchor into the heart via a minimally invasive approach.

22. The method of claim **14**, wherein securing the anchor to heart tissue at the first location comprises introducing the anchor into the heart via a percutaneous approach.

23. The method of claim **14**, further comprising:

actively monitoring heart function prior to securing the proximal portion of the generally flexible elongate member to heart tissue at a second location.

24. A method for treating a heart, comprising:

securing a plurality of anchors to heart tissue in or adjacent a first heart chamber, wherein the anchors each comprise a plurality of radially extendable prongs configured to extend into heart tissue;

securing a plurality of generally flexible elongate members to the anchors, wherein each generally flexible elongate member comprises a distal portion and a proximal portion, and the distal portion of each generally flexible elongate member is secured to at least one anchor;

securing the proximal portions of the generally flexible elongate member together via a clip such that tension is applied between the clip and the generally flexible elongate members.

25. The method of claim **24**, wherein the clip is positioned in or adjacent a second heart chamber, and further comprising:

passing the generally flexible elongate members between the first heart chamber and the second heart chamber.

26. The method of claim **25**, wherein the clip is positioned on a septum dividing the first heart chamber from the second heart chamber, and further comprising:

passing the generally flexible elongate members through the septum.

27. The method of claim **24**, wherein the clip is positioned on an exterior surface of the heart, and further comprising:

passing the generally flexible elongate members through the heart wall.

* * * * *