United States Patent

[11] 3,629,638

[72] Inventors Harry Veron Framingham; Richard Allan Carey, Sr., Marlboro, both of Mass.

[21] Appl. No. 3,126
[22] Filed Jan. 15, 1970
[45] Patented Dec. 21, 1971
[73] Assignee Sperry Rand Corporation

[54] **PLASMA DISPLAY DEVICE WITH INTERNAL-EXTERNAL ELECTRODE STRUCTURE**
4 Claims, 2 Drawing Figs.

[52] U.S. Cl. 313/109.5, 315/169, 313/201
[51] Int. Cl. H01j 17/48
[50] Field of Search ..... 313/109.5, 201; 315/169, 169 TV

[56] **References Cited**

UNITED STATES PATENTS

2,004,577	6/1935	Lebedenko et al.	313/109.5
2,848,638	8/1958	Smith	313/109.5
3,497,751	12/1970	Cullis, Jr.	313/109.5
3,509,407	4/1970	Cullis, Jr.	315/169 TV
3,264,074	4/1966	Jones	315/169 TV

Primary Examiner—Herman Karl Saalbach
Assistant Examiner—Saxfield Chatmon, Jr.
Attorney—S. C. Yeaton

ABSTRACT: A gas discharge panel display device comprising a planar dielectric member having a plurality of gas cell forming holes arrayed therein and disposed intermediate a pair of exterior planar dielectric members. An electrode configuration for firing the gas cells includes an external electrode structure positioned on the outer surface of one of the exterior members operating in conjunction with an internal electrode arrangement positioned on the remote surface of the intermediate member, holes being formed in the internal electrode structure in overlaying relation with and conforming to the shape of the gas cells.

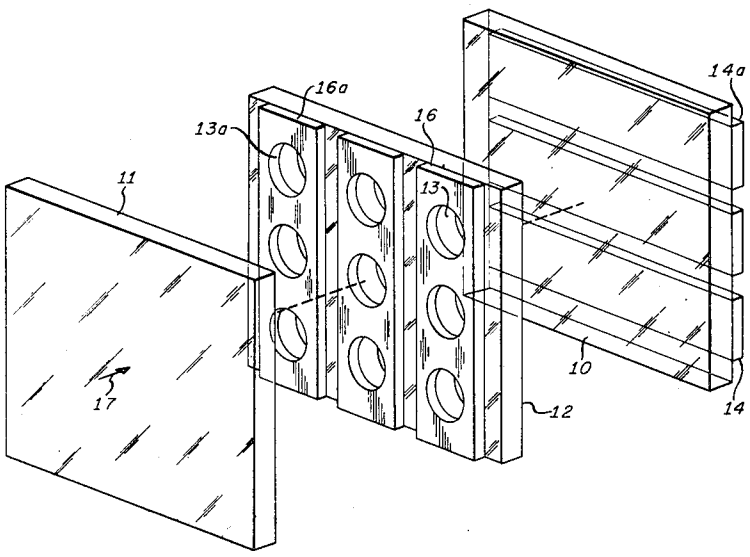

FIG. 1.

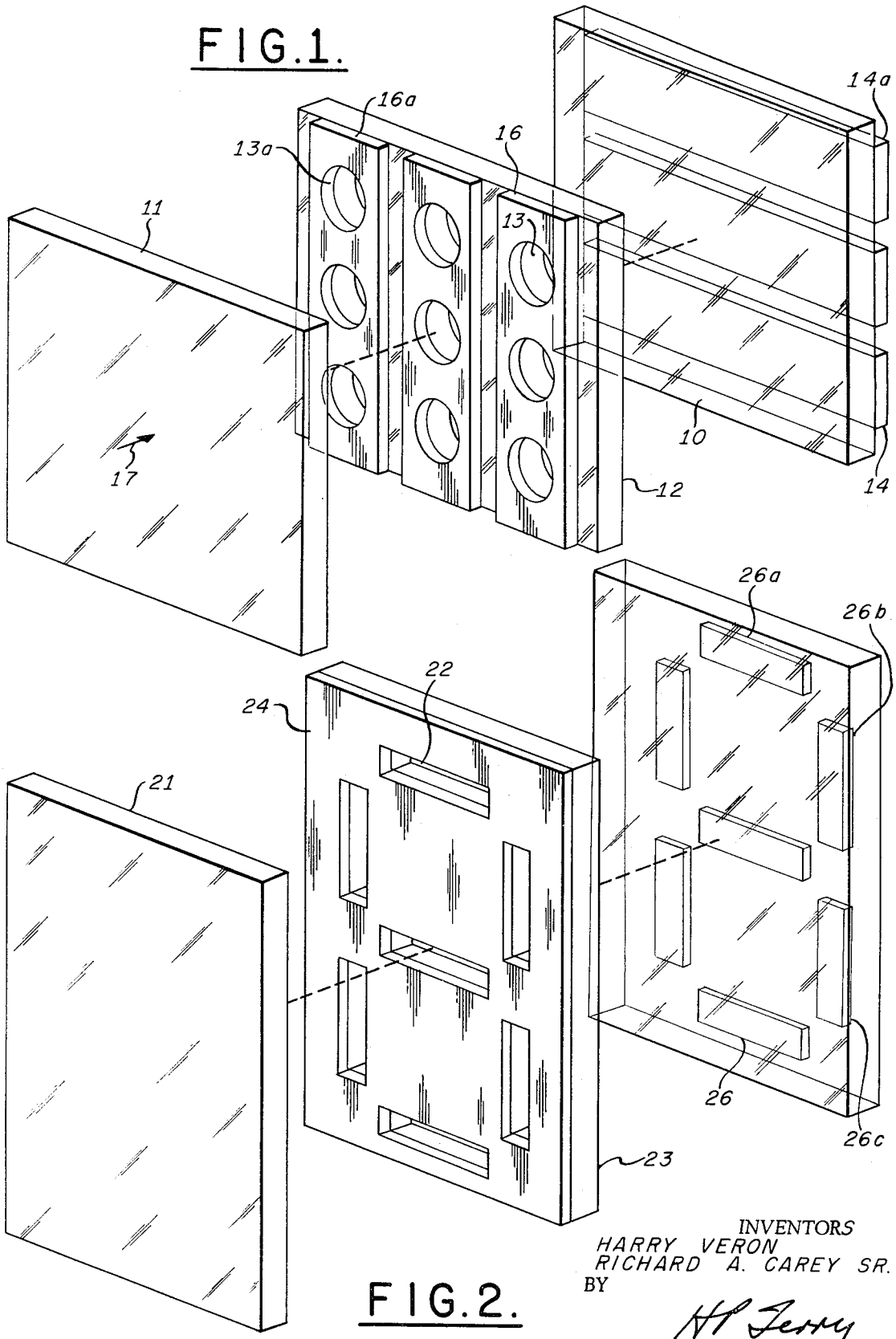

FIG. 2.

INVENTORS
HARRY VERON
RICHARD A. CAREY SR.
BY
H P Terry
ATTORNEY

PLASMA DISPLAY DEVICE WITH INTERNAL-EXTERNAL ELECTRODE STRUCTURE

BACKGROUND OF THE INVENTION

1. Field of the Invention

This invention relates to visual display panels of the type comprising a matrix of AC-excited excited gas discharge cells disposed between parallel plane electrode structures.

Operation of such devices is based on ionization of the gas in selected cells to provide a visual presentation of alphanumeric or other information which is to be displayed. This is accomplished by energizing an appropriate electrode or plurality of electrodes on each side of the gas cells in a manner to establish an ionizing potential difference across discrete cells such that a light pattern representative of the information to be displayed is produced.

2. Description of the Prior Art

Generally in panel display devices of the type described herein, a two-dimensional array of cells is formed intermediate two electrode planes each including a plurality of lineal parallel electrode elements with the electrodes in one plane orthogonally oriented relative to those in the other plane. The electrodes have typically been positioned either immediately adjacent the gas, forming an internal electrode structure or, alternatively, have been spaced from the gas by respective insulating or dielectric layers to form an electrode structure which is external to the gas cells. In both of these configurations the lighted discharge cells must be viewed through a semitransparent electrode overlaying the cells, resulting in an undesirable diminution of the visible light. Moreover, with the internal structure, wherein both electrodes are in contact with the gas, the likelihood of deleterious electrode sputtering increases. This contaminates the gas fill thereby degrading electrical performance of the device and, in extreme cases, can cause shorting between the electrodes due to the accumulation of sputtered material therebetween. An external electrode configuration substantially reduces the sputtering problem attendant to internal electrodes but usually requires considerably higher power input to achieve a desired light output, namely, a light level suitable for easy viewing under ordinary ambient room lighting conditions.

SUMMARY OF THE INVENTION

The above-mentioned disadvantages of prior art gas discharge panel display devices are overcome or significantly reduced with the present invention by the provision of a unique electrode configuration comprising a combination of internal and external electrodes disposed respectively on opposite sides of an ionizable gaseous medium. More specifically, in a flexible symbol format embodiment of the present invention, a planar dielectric member, having a matrix of holes extending therethrough forming the gas cells, is positioned between a pair of exterior planar dielectric members and sealed together therewith at the edges to form a unitary gastight apparatus. A tube connected to the apparatus and sealable at the external end provides for evacuating air and other impurities preparatory to filling with a selected gas at a desired pressure. A set of linear electrodes is affixed to the outer surface of one of the exterior dielectric members in superposed relation to respective rows of the gas discharge cells of the intermediate layer. These constitute the external electrodes. Another set of linear electrodes, arranged in columns, is similarly positioned relative to the gas cells adjacent the interior surface of the other exterior planar member to form the internal electrodes. In each internal electrode holes are formed in overlaying relation and conforming to the shape of the gas cells. This construction provides for sharply defined lighting at each cell and enhances the brightness of the display inasmuch as it is viewed looking directly into the discharge without the presence of an intervening electrode. Application of ionizing potentials to individual orthogonally disposed electrodes or various combinations thereof in the manner to be described hereinafter thereby enables virtually any symbol or

even a scene to be presented assuming that a sufficient number of gas cells is provided to achieve the necessary resolution.

In a fixed format embodiment of the invention the gas cells are formed in the shape of elongated rectangles arranged relative to one another in a standard alphanumeric symbol generating configuration. In this instance, the internal and external electrodes have the same location relative to the dielectric layers of the composite structure as previously described for the flexible symbol format. The external electrodes have the same shape as the gas cells and are mounted in superimposed relation thereto. The internal electrodes, on the other hand, are conveniently formed by a single conductive member having a plurality of holes extending therethrough with a shape matching and overlaying the gas cell holes.

BRIEF DESCRIPTION OF THE DRAWINGS

FIG. 1 is an exploded perspective view of a flexible format embodiment of the invention,

FIG. 2 is an exploded perspective view of a fixed format embodiment of the invention.

DESCRIPTION OF THE PREFERRED EMBODIMENTS

Referring to FIG. 1, a gas discharge display device constructed in accordance with the principles of the present invention comprises exterior dielectric members **10** and **11** disposed on opposite sides of interior dielectric member **12**. The dielectric members are thin plates, preferably constructed of a material such as glass or quartz and are typically only about 5 to 10 thousandths of an inch thick to minimize the overall thickness of the display panel, but these dimensions are not critical. Interior member **12** has a plurality of holes **13** extending through it which can be formed, for example, by ultrasonic drilling or chemical etching in accordance with conventional techniques well known in the art. While only a small number of holes are depicted in the drawing it will be appreciated that several thousand, perhaps even tens of thousands, of such holes could be provided if needed. External electrodes **14** are disposed on the outer surface of exterior member **10** so as to extend across respective horizontal rows of holes in interior member **12**. In a similar manner, internal electrodes **16** are disposed on interior member **12** on the surface thereof remote from the external electrodes. As indicated, the internal electrodes extend in a direction orthogonal to the external electrodes and have holes in them in overlaying relation to the holes in the interior dielectric member. All the electrode elements are preferably constructed of chrome or aluminum.

When assembled, exterior member **10** is brought into contact with interior member **12** while exterior member **11** is held against internal electrodes **16** and the dielectric members are then sealed around their edges as by an epoxy or encapsulating material to form a gastight unitary structure. A tube (not shown) can be coupled through the side of the structure into its interior region for the purpose of out-gassing and filling with an ionizable gas such as neon at a pressure of about 300 Torr whereby individual gas cells are formed by the holes in the interior member. Successful operation has been achieved with a device of this type wherein the electrodes are on the order of 1,000 Angstroms thick and 0.030 inches wide with the holes in both the internal electrodes and the interior dielectric member approximately 0.020 inches in diameter and spaced 0.062 inches center to center.

In operation of the device a selected gas cell is illuminated by applying an AC signal of sufficient amplitude to the appropriate internal and external electrodes such that an ionizing discharge is established in the cell to cause visible radiation to be emitted therefrom. For instance, application of potential to electrodes **14*a*** and **16*a*** uniquely establishes a potential difference across cell **13*a***. Other cells can be ignited by energizing different electrode combinations and obviously a plurality of cells can be energized simultaneously if desired.

In the case where a cell is ignited by directly applying a potential of sufficient amplitude to ionize the gas, that is, a potential greater than the firing potential, the discharge commences immediately upon application of the signal and likewise terminates upon removal of the excitation. Alternatively, firing can be accomplished by continuously applying to all of the electrodes a sustaining signal which by itself is incapable of ionizing the gas, that is, a sustaining signal at an amplitude slightly less than the ionizing potential and typically at a frequency in the kilohertz range, 300 kilohertz being suitable for the specific device described herein. In this instance an individual cell is fired by applying a writing pulse to the related electrodes in a manner such that the writing signal is decoupled from all the other electrodes but adds to the sustaining signal at the selected electrodes as the sustaining signal crosses from the negative to the positive portion of its cycle thereby raising the instantaneous excitation across the selected cell to a level above the ionizing potential. Thereafter the discharge continues until an erase pulse is provided in a similar manner as the sustaining signal crosses from the positive to the negative portion of its cycle to reduce the applied potential below the ionizing cutoff level.

The internal-external electrode combination provided by the invention provides several advantages such as reduced sputtering, greater efficiency (ratio of light output to power input) and brighter output as explained hereinbefore. It will now be apparent that the latter feature is realized because the gas discharge is viewed as from position **17** by looking directly through glass member **11** without obstruction by any of the electrode members. Regarding the other advantages, it is believed that these obtain from the unique electrode structure which not only enhances the electric field configuration within the individual gas cells but also substantially reduces sputter inducing conduction currents by allowing only a predominant displacement current to flow.

Other refinements known in the art can also be used in the display panel constructed according to the principles of the present invention. For example, an opaque insulating member could be used in place of glass interior member **12** or the walls thereof between the respective cells can be coated with an opaque material to minimize optical coupling between the cells.

The fixed symbol format embodiment of the invention illustrated in FIG. **2** is arranged, constructed and assembled in essentially the same way as described with reference to the flexible format embodiment of FIG. **1**. Here again the illuminated symbols are viewed by looking through electrical insulator **21** directly into the discharge cells **22** extending through the middle insulator member **22**. In this embodiment, however, the discharge cells have a rectangular shape and are configured in a conventional alphanumeric pattern whereby various letters and numbers can be displayed by igniting the appropriate cells. The internal electrode **24** is preferably, but not necessarily, a single metallic member having holes therethrough overlaying and matching the shape of the discharge cell holes in member **23**. The external electrodes **26**, which are formed by conventional masking and evaporation techniques, consist of individual metallic members positioned on the surface of insulating member **27** distal the internal electrode. The external electrodes have a shape and size conforming to the respective overlaying holes in insulator **23** and internal electrode **24** and are positioned in superposed relation thereto on member **27**.

In operation of the device, a numeral **7**, for example, can be presented by connecting the energizing AC potentials across the common internal electrode **24** and external electrodes **26***a*, **26***b* and **26***c*. For this embodiment, presentation of various symbols by means of signals of sufficient amplitude to ionize the gas in selected cells without the use of a sustaining signal is preferred. Further, it should be noted that the excitation can be applied by means of short bursts of AC energy; for instance, 4 or 5 cycles of a 300 kilocycle signal at a repetition rate of say one kilocycle to 100 kilocycles. Operation in this manner provides for dimming control simply by varying the duty cycle of the applied energy bursts, the 100 kilocycle rate providing a display approximately 100 times brighter than the one kilocycle repetition rate.

Finally, regarding the construction of the fixed format embodiment, it has been found that suitable operation can be achieved by replacing the middle insulator member **23** with a metal shim having the discharge cells formed in it. This construction increases the brightness but tends to consume more power.

While the invention has been described in its preferred embodiments, it is to be understood that the words that have been used are words of description rather than limitation and that changes may be made within the purview of the appended claims without departing from the true scope and spirit of the invention in its broader aspects.

We claim:

1. A gas discharge display apparatus having a plurality of discrete gas cells for displaying symbols in accordance with the selective ionization of gas in the respective cells in response to ionizing potentials applied thereacross, comprising

a substantially planar rear wall insulator member and a substantially planar translucent front wall insulator member sealed together about their edges in spaced apart relation to form a hermetically sealed enclosure for an ionizable gas contained therein,

an additional planar insulator member positioned between the front and rear wall insulator members in contacting relation with the rear wall interior surface and having a plurality of holes extending therethrough forming the individual gas cells,

internal electrode means positioned between and in contacting relation with the interior surface of the front insulator member and adjacent surface of the additional insulator member, said internal electrode means having through holes spatially superposed with the gas cell forming holes in said additional insulator member to enable direct viewing of ionized gas in said cells through the front translucent insulator member, and

external electrode means including a plurality of electrode elements each formed on the exterior surface of the rear insulator member in spatially superposed relation with at least one of the gas cells, said electrode elements thereby being separated from the gas by said rear insulator member whereby sputter material emitted from said internal electrode means and deposited on the walls of the gas cells is precluded from establishing a shorting path between said internal and external electrodes.

2. The apparatus of claim **1** wherein said electrode elements and said holes are in the shape of elongated rectangles arranged in an alphanumeric format.

3. The apparatus of claim **1** wherein said internal electrode means comprises a plurality of metallic members, each such member extending across a plurality of said gas cells; and the external electrode elements extend in a direction orthogonal to said internal metallic members.

4. The apparatus of claim **3** wherein the holes in said additional insulator member are arrayed in a two-dimensional matrix and said additional member is sealed around its edge together with said pair of insulating members to form said enclosure.

* * * * *