Jan. 16, 1951 W. A. JOHNSTON 2,538,200

CLOTHES-WASHING MACHINE WITH SUDS CONTROL DEVICE

Filed April 15, 1948

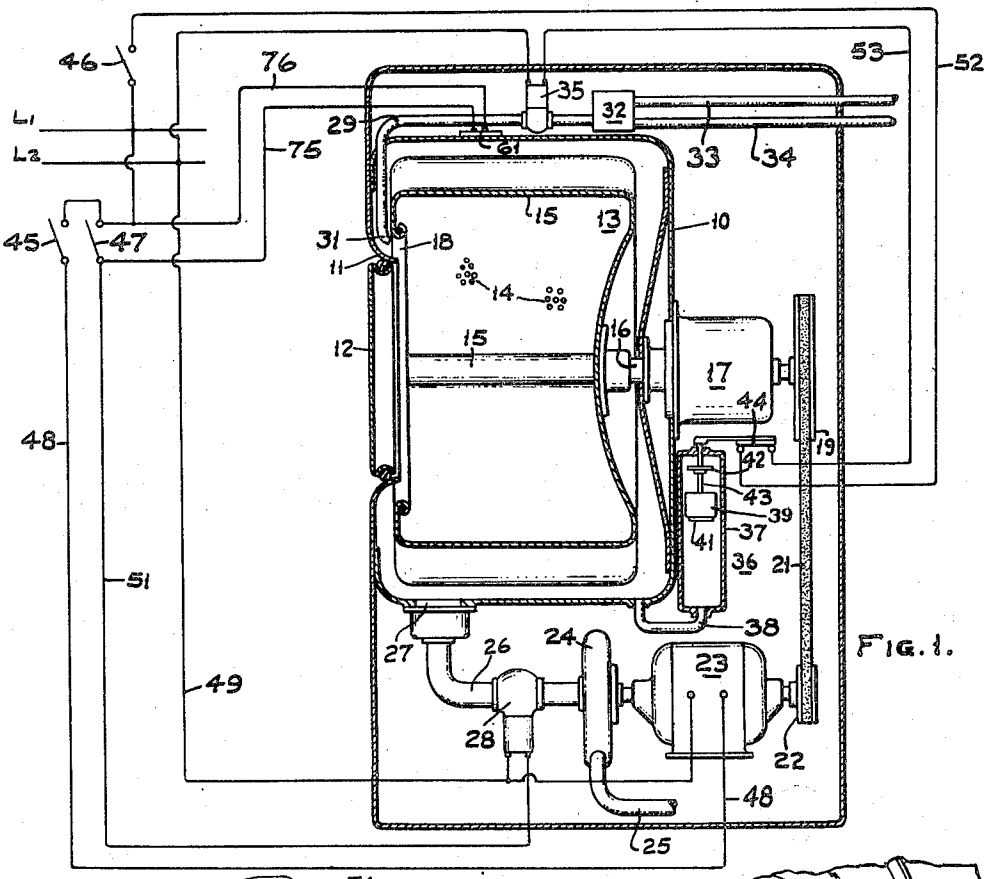

FIG. 1.

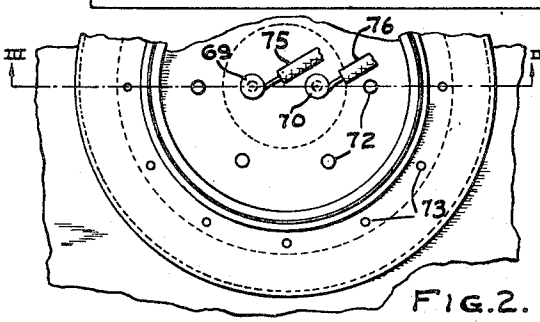

FIG. 2.

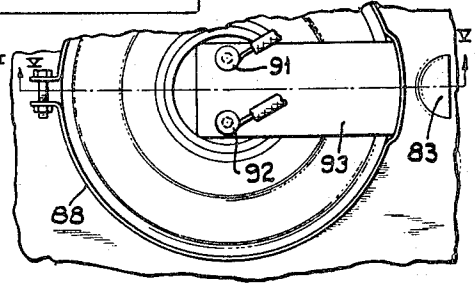

FIG. 4.

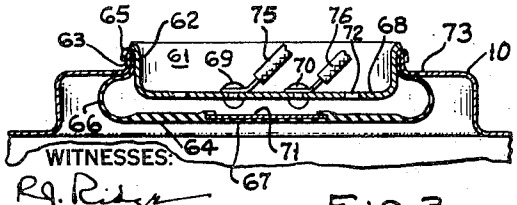

FIG. 3.

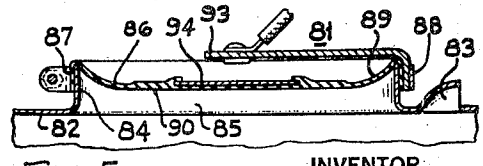

FIG. 5.

WITNESSES:
R. G. Ridge
E. H. Lutz.

INVENTOR
WILLIAM A. JOHNSTON
BY Roy M. Ewall.
ATTORNEY

Patented Jan. 16, 1951

2,538,200

UNITED STATES PATENT OFFICE

2,538,200

CLOTHES-WASHING MACHINE WITH SUDS CONTROL DEVICE

William A. Johnston, Mansfield, Ohio, assignor to Westinghouse Electric Corporation, East Pittsburgh, Pa., a corporation of Pennsylvania

Application April 15, 1948, Serial No. 21,138

6 Claims. (Cl. 68—208)

1

My invention relates to laundry apparatus and has for an object to provide improved apparatus of this kind.

A further object of the invention is to provide an improved clothes washing machine having provisions for controlling the amount of suds formed in the machine during its operation.

It is a further object of the invention to prevent the pressure of the suds formed in a washing machine from exceeding a predetermined value.

The foregoing and other objects are effected by my invention as will be apparent from the following description and claims taken in connection with the accompanying drawings, forming a part of this application, in which:

Fig. 1 is a diagrammatic view of one form of washing machine controlled in accordance with my invention;

Fig. 2 is an enlarged plan view of the suds controlling device shown in Fig. 1;

Fig. 3 is a section taken along the line III—III of Fig. 2;

Fig. 4 is a plan view of a modified form of suds control device; and

Fig. 5 is a section taken along the line V—V of Fig. 4.

Reference will now be had to the drawing wherein I have elected to show my invention applied to a conventional washing machine of the so-called horizontal axis type which includes a tub structure 10 having an access opening 11 formed in the front wall thereof and closed by a suitable hinged gasketed door 12. Arranged within the tub 10 is a basket structure generally cylindrical in configuration and indicated at 13. The basket includes a cylindrical side wall which is perforate substantially throughout its extent, a number of the perforations being indicated at 14. The basket is also provided with a plurality of radially, inwardly projecting vanes 15 for the agitation of the fabrics during rotation of the basket 13, all of which is well understood. The basket is rotated at a speed of approximately 50 R. P. M. by a shaft 16, the latter being driven by a suitable geared speed reducing mechanism, generally indicated at 17. The basket structure 13 is also provided with a relatively large access opening 18 at the front side thereof, which opening 18 is in registry with the access opening 11 of the tub.

The speed reducing mechanism 17 is driven by a sheave 19 belted, as shown at 21, to a pulley 22 driven by an electric motor 23. The latter also serves to drive a fluid discharge pump 24, the discharge conduit 25 of which leads to a suitable

2

point of discharge. The inlet of the pump 24 is connected by a conduit 26 to a drain opening 27 formed in the bottom of the tub and flow of vitiated water from the tub to the pump 24 is controlled by an electrically operated mechanism such as, for example, a solenoid operated valve 28. The valve 28 may be of conventional construction and need not be described in detail other than to state that, when energized, the valve 28 is opened and, conversely, when deenergized, the valve 28 is closed.

Washing water is supplied to the tub 10 by a conduit 29 which terminates preferably in a nozzle 31, the latter being arranged to spray the water into the interior of the basket 13. Preferably, the conduit 29 originates at a water mixing device 32 which is supplied with hot and cold water through conduits 33 and 34. Flow of water to the tub is controlled by a suitable electrically operated valve such as, for example, a solenoid operated valve 35. The valve 35 is arranged to be opened when energized and closed when deenergized.

The amount of water admitted to the tub for a washing operation is controlled by a suitable water level device such as, for example, a float switch generally indicated at 36. The latter includes a casing 37 which communicates with the tub through a conduit 38. A float 39 floats upwardly and downwardly in the casing 37 as the water level rises and falls. The float 39 engages stops 41 and 42 on a rod 43 for the actuation of a switch 44, the movable element of which is connected to the rod 43. When the proper amount of water has been admitted to the tub the float 39 engages the stop 42 for opening the switch 44. When the level of the water in the tub falls, the float 39 engages the stop 41 for closing the switch 44. Preferably, the switch 44 is closed before all of the water has been discharged from the tub in order that water may be sprayed through the nozzle 31 during the discharge of vitiated water from the tub.

The sequential operation of the motor 23, the inlet valve 35 and the discharge valve 28 is effected by a plurality of switches 45, 46 and 47, respectively. The latter may be manually operated or, in the case of an automatic machine, are sequentially actuated by a suitable timer in a well-understood manner.

The source of power for the washer is represented by line conductors L_1 and L_2 which are connectible, for example, to a conventional 115-volt residential lighting circuit. As shown, the line side of the switches 45, 46 and 47 are con-

nected directly to the line conductor L_1. The load side of switch 45 is connected by means of a conductor 48 to one terminal of the motor 23, the opposite terminal of which is connected by means of a conductor 49 directly to the line conductor L_2. The load side of the switch 47 is connected by means of a conductor 51 to a terminal of the solenoid operated valve 28, the opposite terminal of which is connected to the line conductor L_2 through conductor 49. The load side of switch 46 is connected to one terminal of the float switch 44 by a conductor 52, the other terminal of switch 44 being connected to a terminal of a solenoid valve 35 by a conductor 53. The opposite terminal of the solenoid valve 35 connects directly to the line conductor L_2 as shown.

The operation of the washer which I have described up to now is as follows. The operator first deposits the load of fabrics in the basket 13 and the door 12 is closed. A body of soap may also be deposited in the basket 13 at this time or it may be later admitted through a suitable soap chute (not shown). The switches 45 and 46 are closed for energizing the motor 23 and inlet valve 35. Accordingly, the basket 13 is rotated at its washing speed and the flow of water through the conduit 29 is initiated. When the proper amount of water has been admitted to the tub 10, the float switch 44 is opened for deenergizing and closing the valve 35. The rotating basket 13 agitates the fabrics in the washing solution for removing soils therefrom in a manner well understood in the art. At the conclusion of the washing operation the switch 47 is closed for energizing and opening the drain valve 28, whereupon the vitiated washing solution is discharged by the pump 24. When the level of water has dropped sufficiently to engage the float 39 and the stop 41, the switch 44 is closed for completing the circuit to the solenoid valve 35 which then opens. At this time a flushing rinse is provided, the water entering the basket 13 flushing loose soils and soap scum from the surface of the fabrics to be carried away with the body of washing solution. It will be understood at this time that water is discharged from the tub 10 at a faster rate than it is admitted.

After the body of washing water has been discharged, the switch 47 is opened for deenergizing and closing the drain valve 28 and a body of rinse water is admitted to the tub 10. The admission and subsequent discharge of the rinse water are carried out in the same manner as described in connection with the admission and discharge of washing water and need not be repeated. However, a flushing rinse as described may not be necessary during the discharge of the rinse water so that a switch 46 is opened once the body of rinse water is admitted to the tub.

If, in preparing the body of washing solution, the operator deposits an excess of soap in the washer, a larger than normal body of suds is created which will completely fill the tub 10. I have found that the suds or frothy mass of soap bubbles which fill the tub may attain a pressure as high as 6 to 8 inches of water. Accordingly, the suds will discharge from the tub through any opening such as vent openings or soap door openings and will spill over the outside of the tub and upon the floor. In addition to this undesirable operation, the suds which span the gap between the basket 13 and the tub 10 create a drag on the basket and resist its turning movement. Accordingly, the motor 23 becomes overloaded.

In accordance with my invention, means is provided for limiting the pressure of the suds formed in the tub during washing periods to a predetermined value. This means includes a pressure-responsive device, shown enlarged in Figs. 2 and 3 and indicated generally by the numeral 61. This device 61 is located in a region of the tub 10 which is elevated with respect to the level of the washing solution therein. As shown, the tub 10 has an aperture 62 therein which is defined by an upturned flange 63 formed on the upper portion of tub 10. A resilient cup-shaped bellows or diaphragm 64 closes the aperture 62 and has its upper rim portion 65 encompassing the flange 63. The lower annular wall of the resilient diaphragm 64 is semicircular in cross section as shown at 66 and is disposed within the tub 10. The annular wall 66 supports a flat circular wall portion 67 which, for stiffness, may be made relatively thick, as shown. The diaphragm structure 64 may be retained in position within the tub aperture 62 by a flanged cap 68 which is forced within the rim 65 to provide a fluid-tight connection between the rim 65 and tub flange 63. Preferably, the cap 68 is formed of insulating material and defines the support for a pair of contacts 69 and 70. The latter cooperate with a movable bridging contact 71 which is carried by the diaphragm structure 64. As shown, the contact 71 is retained in a recess formed in the circular wall portion 67 of the diaphragm. The diaphragm structure 64 is preferably molded of rubber and the inherent bias thereof maintains the bridging contact 71 out of engagement with the contacts 69 and 70. As the pressure of the suds engaging the diaphragm increases to a predetermined value, the annular wall 66 collapses and bridging of the contacts 69 and 70 by contact 71 is effected. Preferably, one or more openings 72 are provided in the cap 68 in order to vent the space between the diaphragm 64 and cap 68 to the atmosphere.

Venting of the interior of the tub 10 to atmosphere may be provided by a series of vent holes 73 arranged in the tub 10 adjacent the annular wall 66 of the diaphragm structure 64. The arrangement is such that, in the position of the diaphragm 64 as shown, the vent holes 73 are open but when the wall 66 collapses under pressure, the vent openings 73 are covered thereby.

The operation of the pressure-responsive device 61 when an excess of soap is deposited in the tub is as follows. As the tub fills with water, as described, the air displaced by the body of water is vented to atmosphere through the vent holes 73. The churning of the water and soap produces a washing solution and, because of an excess of soap, a large body of suds is produced in the tub above the body of washing solution. Air displaced by the suds is discharged through the holes 73 until the suds completely fill the tub and blanket the openings 73. Further production of suds due to the agitation of the solution progressively increases the pressure of the suds and tends to force suds through the openings 73. The surface tension of the suds blanketing the openings 73, however, resists the discharge of suds through the openings when the pressure of the suds is relatively low. If the suds pressure is permitted to progressively build up, the suds blanketing the openings 73 are forced therethrough. However, as the pressure increases, the walls 66 start to

collapse or flatten and, prior to the discharge of suds through the openings 73, the latter are covered by the collapsed walls 66 preventing the discharge of suds. Also, the contacts 69 and 70 are bridged by the contact 71. The contacts 69 and 70 are connected by conductors 75 and 76 in shunt across the switch 47 so that bridging of the contacts 69 and 70 will energize and open the drain vave independently of the switch 47. Accordingly, draining of washing solution from the tub is initiated. When the level of the solution drops to the elevation at which the float switch 44 closes, the valve 35 is energized and opened for the spraying of water into the basket 13, it being understood that the control switch 46 remains closed during the washing period in the cycle. The spraying of water into the basket 13 dilutes the solution and breaks up the body of suds. Accordingly, the pressure of the suds is reduced and the inherent bias of the diaphragm structure 64 will effect its return to its normal position, as shown in Fig. 3, wherein the contact 71 is disengaged from the contacts 69 and 70 for terminating the draining of solution from the tub 10. If the over-soaping of the machine has been particularly severe, the pressure of the suds may again build up and effect operation of the device 61 as described. After one or more operations of the device 61, however, the dilution of the washing solution, as described, will restore normal suds conditions.

The pressure-responsive device 61, shown in Figs. 2 and 3, functions not only to effect the draining of washing solution from the tub and the consequent dilution of the solution by the admission of water to the solution but also throttles or closes the vent openings 73 of the tub when abnormal suds pressures prevail. It is to be understood, however, that my invention contemplates the reductions of suds pressure, as described, without controlling the venting means of the tub. In other words, the vent holes 73 may be omitted where conventional tub venting means are employed. A pressure-responsive control device 81 is shown in Figs. 4 and 5 which operates to control the water draining means in the same manner as described in connection with the device 61 and which may be employed with tub structures having any conventional venting arrangement.

As shown in Figs. 4 and 5, a portion of the top wall of a tub structure as shown at 82 is provided with a conventional vent 83. An annular wall 84 is formed on the wall 82 for defining an aperture 85. A resilient diaphragm 86 molded preferably of rubber has a flange 87 which is clamped to the annular wall 84 by means of a clamping band 88. The outer region of the diaphragm 86 is relatively thin and flexible, as shown at 89, so that it may readily deform when the pressure on the diaphragm overcomes the inherent bias in the diaphragm. The center region of the diaphragm, shown at 90, may be relatively stiff and thicker than the outer region 89. A pair of contacts 91 and 92 are carried by an insulating bracket 93 secured in position by the clamping ring 88. A bridging contact 94 carried by the diaphragm portion 90 cooperates with the fixed contacts 91 and 92 for the control of the drain valve 28 in the same manner as described in connection with the pressure-responsive device 61 of Figs. 2 and 3. In the operation of the pressure-responsive device 81, the contacts 91 and 92 are bridged by contact 94 for the draining of solution from the tub at a suds pressure lower than the pressure at which suds are discharged through the vent 83 or, in other words, before the suds pressure has built up to a value which forces suds through the vent in opposition to the surface tension of the suds blanketing the vent 83. Otherwise, the pressure-responsive device 81 operates in the same manner as the device 61 for the draining of washing solution from the tub and the subsequent dilution of the washing solution.

From the foregoing description, it will be apparent that I have provided an improved washing machine wherein the discharge or spillage of suds from the tub is prevented and wherein overloading of the motor because of excess suds in the tub is precluded.

While I have shown my invention in several forms, it will be obvious to those skilled in the art that it is not so limited, but is susceptible of various changes and modifications without departing from the spirit thereof.

What I claim is:

1. In apparatus for washing fabrics or the like, the combination of an enclosed tube for containing washing water and a sudsing detergent, means for washing the fabrics in said water, means for draining vitiated water from the tub and means responsive to the pressure of the suds formed in the tub for controlling operation of the water draining means, said pressure responsive means including a device elevated with respect to the level of water in the tub and subjected to the suds, said device being movable to one position for initiating operation of the water draining means in response to a predetermined high pressure of the suds and movable to a second position to terminate operation of the draining means in response to a lower pressure of the suds.

2. In apparatus for washing fabrics or the like, the combination of an enclosed tub for containing a washing solution of water and a sudsing detergent, means for agitating the fabrics to be cleaned in said solution, electrically operated means for draining solution from the tub, switching means controlling said electrically operated draining means, and pressure responsive means actuating the switching means, said pressure responsive means being carried by the tub above the level of solution therein and subjected to suds formed above the solution, said pressure responsive means closing and opening the switching means in response to respective high and low pressures of the suds.

3. In apparatus for washing fabrics or the like, the combination of an enclosed tub for containing a washing solution of water and a sudsing detergent, means for agitating the fabrics to be cleaned in said solution, electrically operated means for draining solution from the tub, a switch for controlling operation of said electrically operated draining means during a cycle of operation of the washing apparatus, a second switch for controlling operation of the draining means independently of the first mentioned switch, and a pressure operated device carried by the tub above the level of solution therein and subjected to the suds formed in the tub for the actuation of the second switch, said device closing the second switch for the operation of the draining means in response to a predetermined high pressure of the suds and opening the second switch for terminating operation of the draining means in response to a lower pressure of the suds.

4. The combination as claimed in claim 3 in-

cluding means responsive to the draining of a predetermined quantity of washing solution from the tub for admitting water thereto.

5. In apparatus for washing fabrics or the like, the combination of an enclosed tub for containing washing solution of water and a sudsing detergent, electrically operated means for admitting water to the tub, a control switch for controlling said electrically operated means, switching means actuated in response to the amount of solution in the tub and connected in series with said control switch, electrically operated means for draining solution from the tub, a second control switch for controlling operation of the draining means, a pressure operated switch connected in parallel with said second control switch, said pressure operated switch having a diaphragm carried by the tub above the levels of solution therein and subjected to the pressure of suds formed within the tub, said diaphragm effecting opening and closing of the pressure operated switch in response to predetermined low and high pressures of the suds, respectively, and means for washing the fabrics within the tub.

6. In apparatus for washing fabrics, the combination of an enclosed tub for containing a washing solution of water and a sudsing detergent, means for washing the fabrics in the tub, electrically operated means for draining solution from the tub, said tub having an aperture therein disposed above the normal level of the washing solution, a resilient cup shaped bellows having its rim portion secured within and closing said aperture, said bellows extending within the tub and subjected to the pressure of suds therein, said tub having a plurality of venting openings therein contiguous the bellows, said bellows collapsing when the pressure of the suds exceeds a predetermined value and covering said openings, and a switch actuated by the bellows and controlling said electrically operated draining means, said switch being closed by the bellows when collapsed and open at other times.

WILLIAM A. JOHNSTON.

REFERENCES CITED

The following references are of record in the file of this patent:

UNITED STATES PATENTS

Number	Name	Date
2,278,769	Chayle	Apr. 7, 1942
2,305,154	Gilbert	Dec. 15, 1942
2,430,668	Chamberlin	Nov. 11, 1947
2,447,848	Edwards	Aug. 24, 1948