Office de la Propriété Intellectuelle du Canada
Un organisme d'Industrie Canada

Canadian Intellectual Property Office
An agency of Industry Canada

CA 2375010 C 2008/08/26

(11)(21) 2 375 010

(12) BREVET CANADIEN
CANADIAN PATENT

(13) C

(86) Date de dépôt PCT/PCT Filing Date: 2000/05/23
(87) Date publication PCT/PCT Publication Date: 2000/12/07
(45) Date de délivrance/Issue Date: 2008/08/26
(85) Entrée phase nationale/National Entry: 2001/11/23
(86) N° demande PCT/PCT Application No.: GB 2000/001975
(87) N° publication PCT/PCT Publication No.: 2000/073181
(30) Priorité/Priority: 1999/05/28 (GB9912525.4)

(51) Cl.Int./Int.Cl. *C05F 17/02* (2006.01), *B65D 88/54* (2006.01), *B65F 1/12* (2006.01), *B65G 65/30* (2006.01), *B65G 65/46* (2006.01)

(72) Inventeurs/Inventors:
BILBOROUGH, RICHARD CROSSLEY, GB;
CHANDLER, KEVIN MICHAEL, GB;
HEYWORTH, ALAN, GB;
JEWES, PHILIP, GB

(73) Propriétaire/Owner:
TEG ENVIRONMENTAL PLC, GB

(74) Agent: OGILVY RENAULT LLP/S.E.N.C.R.L.,S.R.L.

(54) Titre : CAGE DE COMPOSTAGE CLOISONNEE
(54) Title: PARTITIONED COMPOSTING CAGE

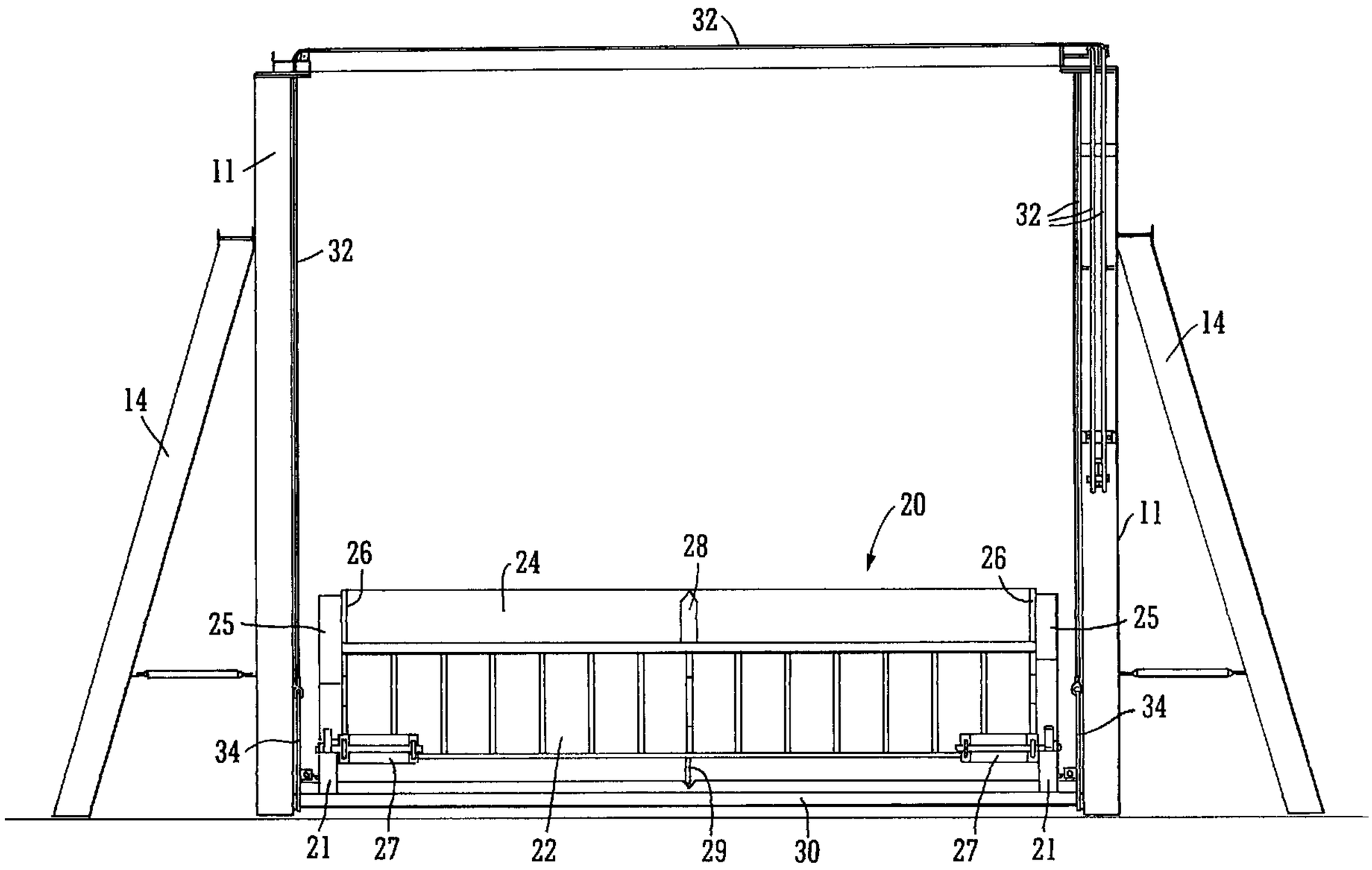

(57) Abrégé/Abstract:
A mesh enclosure for reception of material to be composted is divided into a plurality of compartments and a trough (20) is capable of being raised and lowered between a low level filling station and the top of the cage, and then travelling across the top of the cage to dispense the material to be composted into the compartments. In this respect, the trough base may be provided by a plurality of side by side rotors having radial vanes whereby the material to be composted can be distributed to the compartments. As part of the overall arrangement an auger may be mounted below the mesh enclosure between respective guide rails and capable of travelling therealong to extract compost from the base of each compartment.

(12) INTERNATIONAL APPLICATION PUBLISHED UNDER THE PATENT COOPERATION TREATY (PCT)

(19) World Intellectual Property Organization
International Bureau

(43) International Publication Date
7 December 2000 (07.12.2000)

PCT

(10) International Publication Number
WO 00/73181 A1

(51) International Patent Classification[7]: B65G 63/06, C05F 17/02

(21) International Application Number: PCT/GB00/01975

(22) International Filing Date: 23 May 2000 (23.05.2000)

(25) Filing Language: English

(26) Publication Language: English

(30) Priority Data:
9912525.4 28 May 1999 (28.05.1999) GB

(71) Applicant *(for all designated States except US)*: **TEG ENVIRONMENTAL PLC** [GB/GB]; Crescent House, 2-6 Sandy Lane, Leyland, Preston PR5 1EB (GB).

(72) Inventors; and

(75) Inventors/Applicants *(for US only)*: **BILBOROUGH, Richard, Crossley** [GB/GB]; 55 Victoria Mansions, Navigation Way, Ashton-on-Ribble, Preston PR2 2YY (GB). **CHANDLER, Kevin, Michael** [GB/GB]; 6 Waterside Mews, Lymm, Cheshire (GB). **HEYWORTH, Alan** [GB/GB]; 12 Rose Bank, Rawtenstall, Rossendale, Lancashire BB4 7RD (GB). **JEWES, Philip** [GB/GB]; 47 Withy Grove Crescent, Bamber Bridge, Preston PR5 6NX (GB).

(74) Agents: **BARKER, Rosemary, Anne** et al.; Urquhart Dykes & Lord, Greg's Buildings, 1 Booth Street, Manchester M2 4DU (GB).

(81) Designated States *(national)*: AE, AL, AM, AT, AU, AZ, BA, BB, BG, BR, BY, CA, CH, CN, CR, CU, CZ, DE, DK, DM, EE, ES, FI, GB, GD, GE, GH, GM, HR, HU, ID, IL, IN, IS, JP, KE, KG, KP, KR, KZ, LC, LK, LR, LS, LT, LU, LV, MA, MD, MG, MK, MN, MW, MX, NO, NZ, PL, PT, RO, RU, SD, SE, SG, SI, SK, SL, TJ, TM, TR, TT, TZ, UA, UG, US, UZ, VN, YU, ZA, ZW.

(84) Designated States *(regional)*: ARIPO patent (GH, GM, KE, LS, MW, MZ, SD, SL, SZ, TZ, UG, ZW), Eurasian patent (AM, AZ, BY, KG, KZ, MD, RU, TJ, TM), European patent (AT, BE, CH, CY, DE, DK, ES, FI, FR, GB, GR, IE, IT, LU, MC, NL, PT, SE), OAPI patent (BF, BJ, CF, CG, CI, CM, GA, GN, GW, ML, MR, NE, SN, TD, TG).

[Continued on next page]

(54) Title: PARTITIONED COMPOSTING CAGE

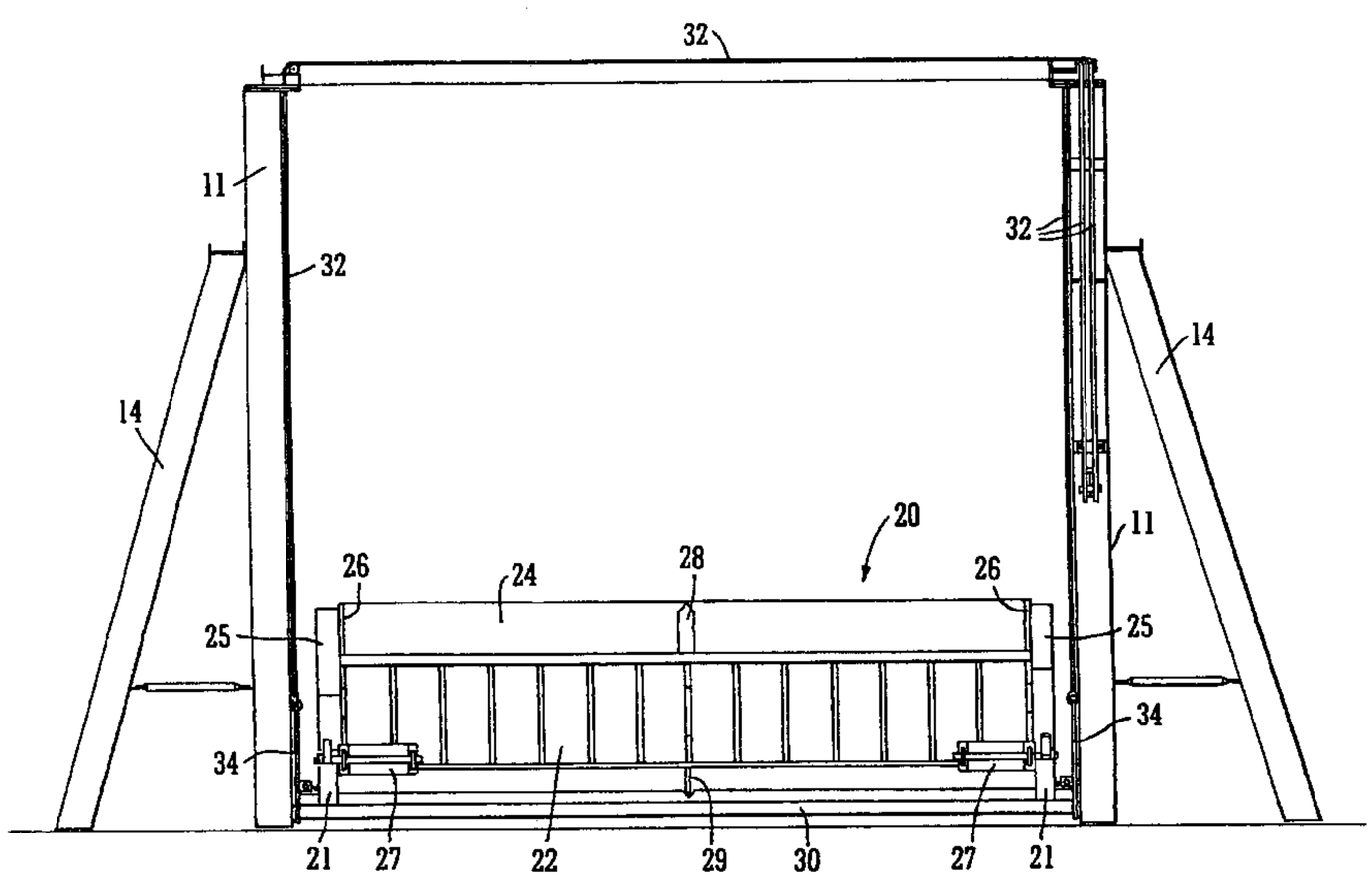

(57) Abstract: A mesh enclosure for reception of material to be composted is divided into a plurality of compartments and a trough (20) is capable of being raised and lowered between a low level filling station and the top of the cage, and then travelling across the top of the cage to dispense the material to be composted into the compartments. In this respect, the trough base may be provided by a plurality of side by side rotors having radial vanes whereby the material to be composted can be distributed to the compartments. As part of the overall arrangement an auger may be mounted below the mesh enclosure between respective guide rails and capable of travelling therealong to extract compost from the base of each compartment.

WO 00/73181 A1

WO 00/73181 A1



Published:
— *With international search report.*

For two-letter codes and other abbreviations, refer to the "Guidance Notes on Codes and Abbreviations" appearing at the beginning of each regular issue of the PCT Gazette.

Partitioned Composting Cage

This invention concerns a composing cage comprising a mesh enclosure divided into a plurality of compartments. It is particularly, but not exclusively suitable for composing biological waste material on an industrial scale, where at least tens of kilograms of such waste are to be loaded per day.

The applicants already manufacture such a cage, but several problem areas have been identified and the object of the present invention, in its various aspects, is to tackle these problems and make improvements to the existing apparatus.

The process of composting is complex. Aerobic bacteria break down the biological material. Thus the material to be composted must be well aerated, not over compacted. This limits the size of any composting container, specifically the width of same in the industrial scale cage with which the invention is primarily concerned. If it is too large, the material in the centre will not have sufficient oxygen and anaerobic processes will ensure, as well as overheating, which is undesirable. For the same reason, it is important to have a mixture of fine and coarse material. It is also important for purposes of aeration that the material is loaded by sprinkling it in to the top of the cage.

An even distribution of material within the cage is also very important so that there are no higher (deeper) areas of material where it may tend to compact and also so that an evenly degraded layer of material of relatively constant thickness can be regularly removed from the base of the cage.

Loading of the cage has hitherto been carried out by an elongate trough, extending the full width of the cage, and permanently mounted above the cage so as to slide therealong. The trough is loaded with a suitable mixture of material to be composted from a sloping elevator assembly at one end of the cage, and then slides along the top of the cage to dispense the material to one or more selected compartments.

As already mentioned, the material ideally needs to be scattered or sprinkled so that it is aerated, but it must also be spread as evenly as possible.

According to a first aspect of the invention, the trough has a base provided by a plurality of side by side rotors having radial vanes whereby the material to be composted can be distributed to the compartments.

In order to prevent material, particularly dry and sandy material, from dropping out between the rotors, the trough

preferably has a plurality of flaps mounted below the rotors, these flaps being operable by a lever mechanism upon actuation of the rotors.

Advantageously, a hydraulic lift is provided for raising and lowering the trough between a low level filling station and the top of the cage. At the low level filling station, the trough can be evenly loaded with much greater accuracy, by visual inspection, by means of a conventional mechanical shovel or similar loading equipment.

A further problem is associated with removal of composted material from the base of the compartment, which is accomplished by an auger mounted below the mesh enclosure between respective guide rails and capable of travelling therealong whilst also rotating. Hitherto, the auger has been mounted onto the rails by way of respective motorised trolleys at each end. In order to remove composted material evenly, it is important to try and move the respective ends of the auger at the same rate, so that the axis of the auger remains substantially perpendicular to the direction of travel. This has proved difficult.

According to a second aspect of the invention, the auger is now moved intermittently along the respective guide rails by a co-

ordinated system of hydraulic rams.

Advantageously, the hydraulic rams, which are arranged at each end of the auger, mounting the auger to the respective guide rails, have a common hydraulic power supply, which links to one of the rams through an axial passage of the auger. In this way the rams will generally move the ends of the auger to the same extent and will not allow them to become significantly out of alignment with each other.

The above mentioned aspects of the invention will all be present in preferred embodiments of composting cage. However, in other embodiments any one of these inventive features may be present on its own, independently of the others.

The invention will be described further, by way of example, with reference to the accompanying drawings, in which:

Figure 1 is an end view of a preferred embodiment of the composting cage of the invention, showing a feeder trough positioned at a low level filling station;

Figure 2 is an enlarged scale side view of a front portion of the cage shown in Fig. 1 (i.e at the same end as in Fig. 1);

Figure 3 is a fragmentary perspective view showing the mounting of one end of an auger to a guide rail in the same embodiment of cage as in Fig. 1; and

Figure 4 is a broken, part-sectional plan view showing the mounting of both ends of the auger shown in Fig. 3.

The illustrated embodiment of composting cage has all three aspects of the invention applied to thereto.

Although not apparent from the drawings, it comprises a large, rectangular or mesh enclosure supported by a framework of upright beams (10, 11, 12, etc) interconnecting substantially horizontal crosspieces (13), and interconnecting oblique struts as well as oblique supporting stanchions (14). The cage is divided transversely into a plurality of compartments of equal width by respective mesh partitions. In a standard cage there may be eight such compartments. Others may be added in two compartment modules. The cage may be about 12 feet (3.6m) in height, but is supported by some of the vertical beams (10) of the framework about 2ft (0.6m) above ground level. Thus a gap remains between the bottom of the enclosures defined by the partitioned cage and the ground to permit removal of the composted material.

Material to be composted is mixed in appropriate proportions - coarse, fine, green, nitrogen-rich, partially rotted, etc - and

then fed at intervals, e.g. daily, into the top of the respective compartments of the cage. Composted materials is also removed periodically, probably also daily, from the base of the cage so that there is a continuous process in operation.

A trough (20) is provided as part of the composting cage apparatus to feed material into the top of the compartments. It comprises a front wall (22), a rear wall (24) and respective side walls (26) (Figures 1 and 2). The rear wall (24) is higher than the front wall (22). The base of the trough (20) is provided by a plurality of substantially parallel rotors (not shown) which extend transversely of the cage. These rotors carry circumferential vanes and radially extending cross walls, so that when they rotate, loose material in the trough (20) will be carried round in the resulting recesses or pockets and will fall from the base of the trough (20).

To prevent small dry particles falling through between the rotors, which could be a problem in the case of a sandy mixture for composting, a plurality of flaps (not shown) are disposed below the rotors. These flaps are pivotally mounted in the manner of louvres. They are generally arranged in close side-by-side adjacency, in a closed condition. A partition (28) in the centre of the trough (20) houses a mechanism for opening the flaps. Each of the flaps carries a downwardly extending lever, and each lever is connected pivotally to a linkage mechanism (29)

which pivots at a higher level adjacent the partition (28). Inside the partition (28) a rotary cam (not shown) acts on a ratchet which is pivotally connected near the top of the linkage (29). Thus, by actuating the cam the ratchet is released, causing the linkage (29) to pivot, which then moves the levers and this causes the flaps to open to a substantially vertical position under their own weight.

The trough (20) is mounted on four wheels (21), one at the front and rear of the bottom of each side wall (26). Also attached externally to the side walls (26) are motors (35) and chain drives for actuation of the rotors in the base of the trough. Motors (27) for driving the aforesaid wheels (21) are mounted on the rear wall (24).

In Figures 1 and 2 the trough (20) is shown at its loading station at the front of the mesh enclosures of the cage. It is arranged close to the ground on a platform (30) which is part of a hydraulic lift mechanism. In Figure 1, a pair of lift cables (32) are shown, which are extensible by the action of a hydraulic ram (not shown) at the right hand side. The cables (32) extend adjacent the inside of respective H-profile beams (11), which are substantially in line with the mid-point between the front and rear walls (22, 24) of the trough (20). The cables (32) are attached to respective elevator plates (34) which are mounted between the upright beams (10, 12) also of H-section, by way of

wheels (36). These wheels (36) are guided between the beams (10, 12) as plates (34) are raised and lowered by the hydraulic cables (32). The plates (34) are connected to the platform (30) at each end so that the platform (30) and the trough (20) mounted on it are raised and lowered therewith.

Thus, in use, the trough (20) is filled at ground level by a mechanical shovel, or similar device, and it can be filled evenly and to an adequate level by inspections by the loading operator. The hydraulic lift (30-36) is then actuated and the trough (20) is raised to the top of the front of the cage. Here, a limit switch is actuated by the trough (20) to start up the motors (27) which drives its wheels (21) (power for the motor being supplied via a cable reel). It then moves off the platform (30) and travels along rails provided at the top of the cage sides until it reaches the cage compartment for which its load is destined. This is preprogrammed by the operator from a central control unit. Upon reaching the correct compartment, the motors (25) for the rotors are actuated simultaneously with the rotary cam which releases the flaps. The load is then dispensed evenly into the compartment, and the trough (20) then travels backwards towards the platform (30) at the front of the cage. As it does so, a part of the linkage (29) in the flap release mechanism makes contact with an upward, stationary projection located substantially centrally of one of the cage partitions and this causes the flaps to close again. To ensure that this happens

there is a similar projection at the top of each cage partition, so if one of them fails to return the flaps for some reason, the next adjacent one will do it.

Referring now to Figures 3 and 4, an auger (40) is mounted below the base of the mesh enclosure. It extends between respective guide rails (42) provided by I-beams which are mounted below and outwardly of the longitudinal side walls of the cage. The axis of the auger (40) is tubular, as is apparent from Figure 4. It has a helical flight (44) which increases in diameter and also in pitch along its length, i.e. across the transverse extent of the cage. This is necessary to try and ensure an even removal of composted material across the width of the cage, the material being transported towards the end of the auger (40) with the larger diameter flight (44). At the extremity of the flight (44), a cross piece, or other conformation (not shown) is preferably provided to facilitate break up of the compost to enable its removal. In this respect it is fairly well compacted at the base of the cage where it may have been resident and undergoing aerobic degradation for up to 21 days.

Each end of the auger (40) is mounted, for rotation, in a respective bearing block (46), which is connected to a slide plate (48), which rests upon the respective rail (42. At one end, a power pack (50) for operation of the auger (40) is connected to the slide plate (48). A motor (51) and drive belt

(52) for rotation of the auger are connected to the power pack (50).

Respective piston and cylinder assemblies (54, 55) extend in opposite directions from each bearing (46), the piston, in each case, carrying at its free end a gripper (56, 57) which is engagable with the respective rail (42). Each gripper (56, 57) has a pair of lugs or teeth or hooks (not shown) in its undersurface which selectively engage in corresponding pairs of apertures (not shown) which are formed at spaced intervals along each rail (42). The piston and cylinder assemblies (54, 55) at the opposing ends of the auger have a common hydraulic supply from the power pack (50). In this respect, pipes (58) for supply of hydraulic fluid to the assemblies (54, 55) remote from the power pack (50) extend through an axial space (60) in the auger (40) itself. Thus, the pairs of piston assemblies (54, 55) at each end of the auger (40) operate substantially in synchrony with each other so as to move the auger (40) along the rails (42) below the composting enclosure with the auger held substantially perpendicular to the direction of travel.

The auger (40) is moved intermittently by sequential operation of the forward and rearward assembly (54, 55). Thus, if the auger (40) is considered to be at or near the front of the cage and moving towards the rear, then starting with the gripper (56) of each forward piston firmly locked to the rail (42) and the

piston of each forward assembly (54) fully retracted, the gripper (57) of each rear piston will automatically be slightly tilted relative to the rail (42) so that its teeth (or lugs or hooks) disengage. The piston of each forward assembly (54) is then extended, thus moving the bearings (46) and the auger (40) towards the rear. In this respect, the auger (40) moves quite slowly, maybe only about ½m in a period of 2½ minutes. The pistons (rams) act with a constant force, e.g of 8 tonnes. Once the pistons of each rearward assembly (55) are fully extended the grippers (57) attached to them will disengage from the rail (42) by retraction of the piston. The grippers (57) will then re-engage further rearward pairs of apertures in the respective rails (42) by re-extensions of the piston (55).

The auger (40) will always move down the full length of the cage, removing the bottom 1ft (30m) or thereabouts of compost, which is disgorged onto a conveyor along one side of the cage. The auger (40) needs to move the entire length so as to ensure substantially even removal and so as to maintain the momentum of breaking up the compacted lowest layer of composted material.

When moving in the other direction, back towards the front of the cage, it is the rearward piston and cylinder assemblies (55) which push the auger (40) intermittently along and the sequence of operation is the converse of that just described.

The foregoing description is illustrative not limitative of the scope of the invention and many variations in detail are possible.

CLAIMS:

1. A composting cage comprising a mesh enclosure divided into a plurality of compartments and an auger mounted below the mesh enclosure between respective guide rails and capable of traveling therealong by intermittent movement to extract compost from the base of each compartment characterized in that the auger is movable along the respective guide rails by a coordinated system of hydraulic rams comprising a pair of piston assemblies at each end of the auger which are operable in synchrony to hold the auger perpendicular to the direction of travel.

2. A composting cage according to Claim 1 wherein the piston assemblies have a common hydraulic power supply, which links to those at one end of the auger through the axis of the auger.

3. A composting cage according to Claim 1 or 2 wherein the piston assemblies connect to the respective guide rails gripper means which selectively engage the rails predetermined intervals.

4. A composting cage according to Claim 1, 2 or 3 and further comprising a trough for reception of material to be composted, which trough is capable of traveling across the top of the cage to dispense the material to be composted into the compartments and has a base provided by a plurality of side by side rotors, each having circumferential vanes and radially extending cross walls, whereby the material to be composted can be distributed to the compartments.

5. A composting cage according to Claim 4 wherein the trough has a plurality of flaps mounted below the rotors, these flaps being openable by a lever mechanism upon actuation of the rotors.

6. A composting cage according to Claim 4 or 5 wherein the flaps are closable by contact with projections from the top of the cage as the trough travels in reverse direction after dispensing its load of material to be composted.

7. A composting cage according to Claim 4, 5, or 6 wherein a hydraulic lift is provided for raising and lowering the trough between a low level filling station and the top of the cage and wherein the trough is provided with wheels and a motor, whereby the trough is able to travel along tracks provided along the top of the cage.

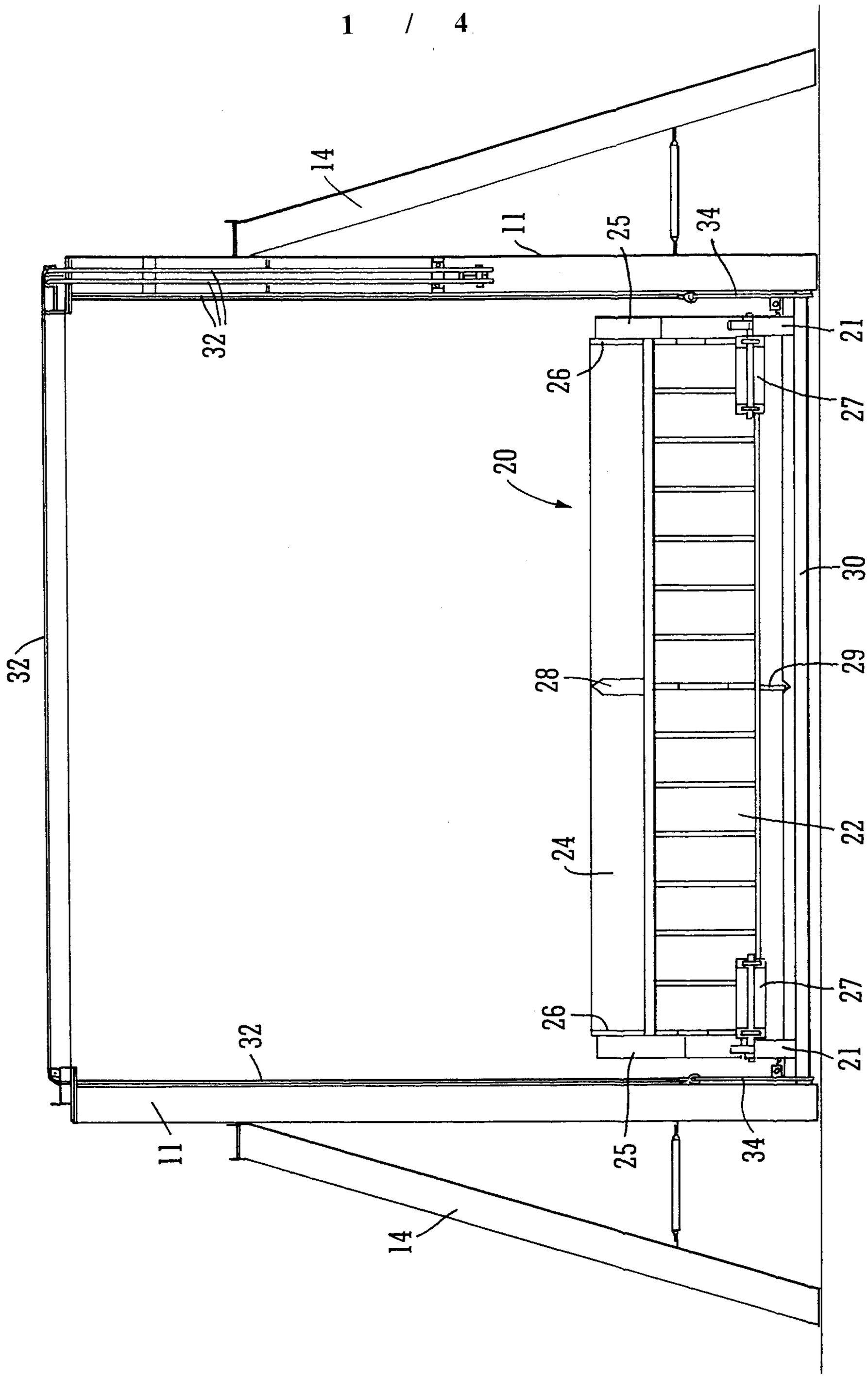

FIG. 1

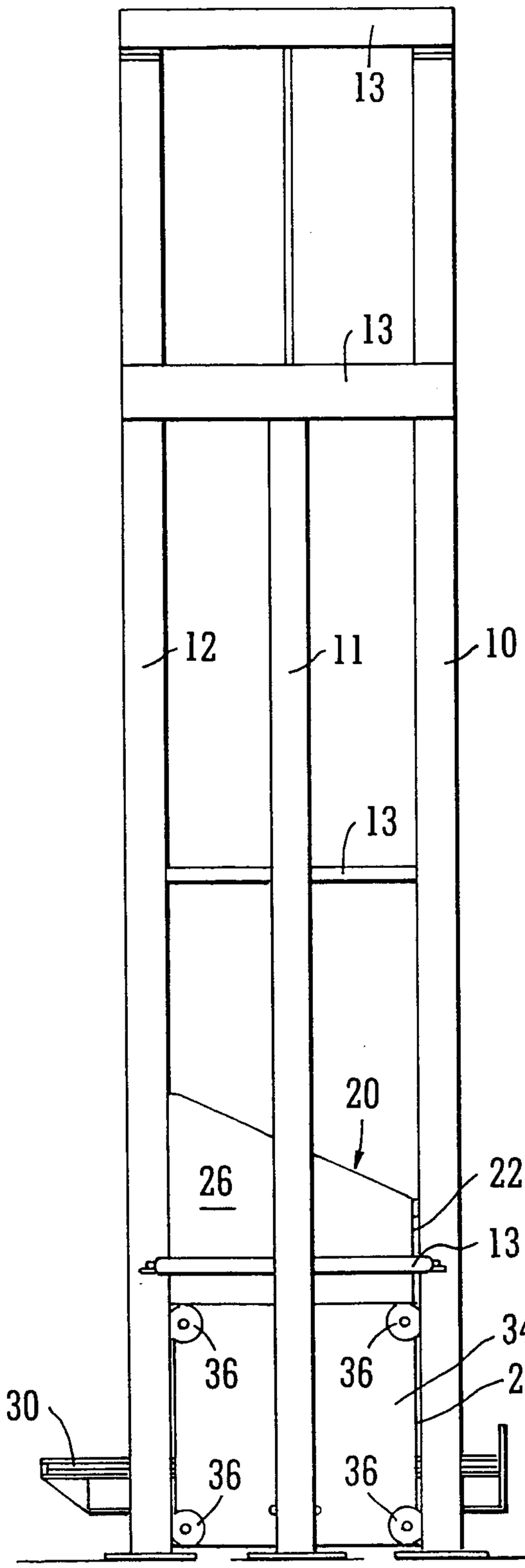

FIG. 2

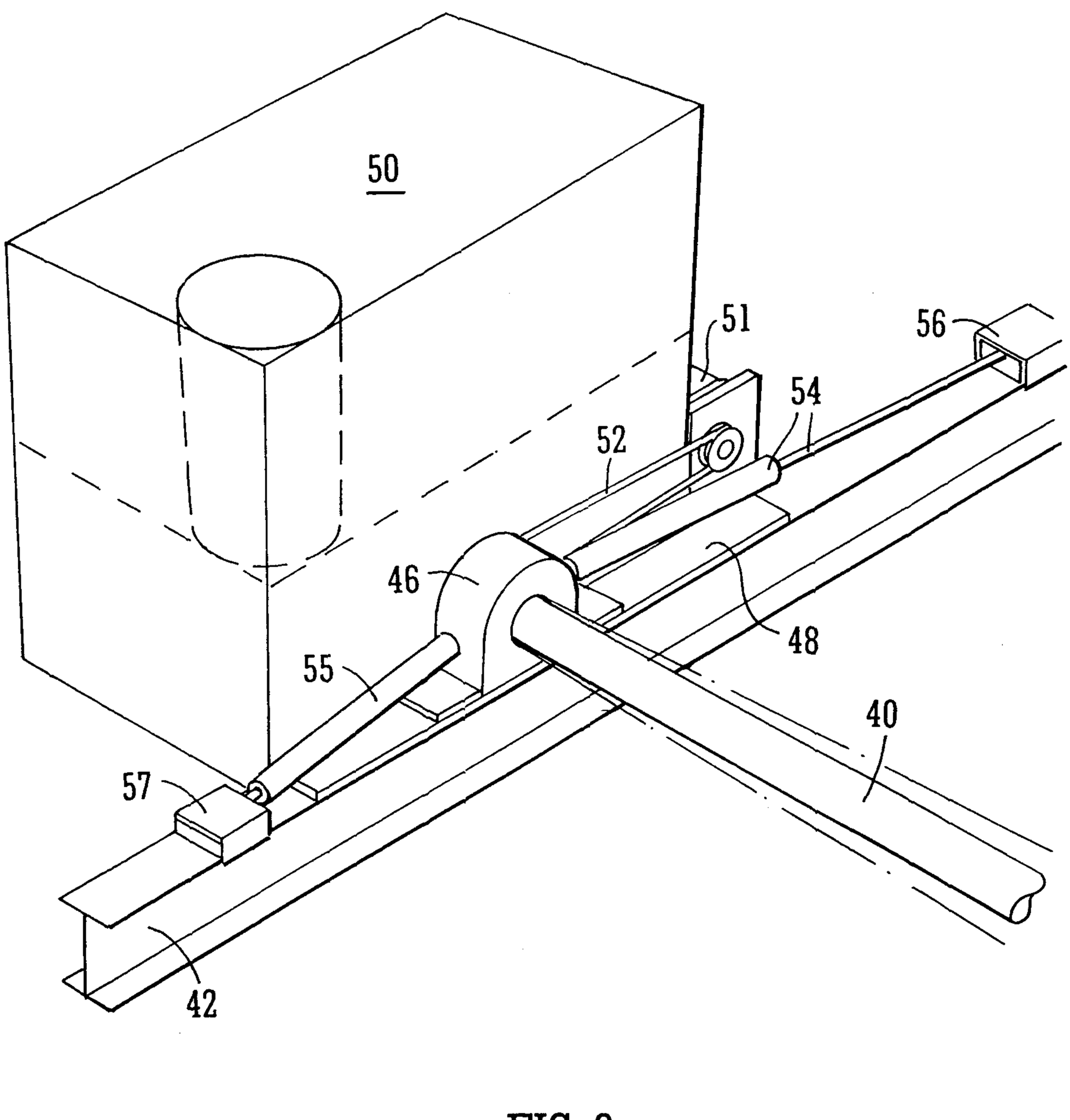

FIG. 3

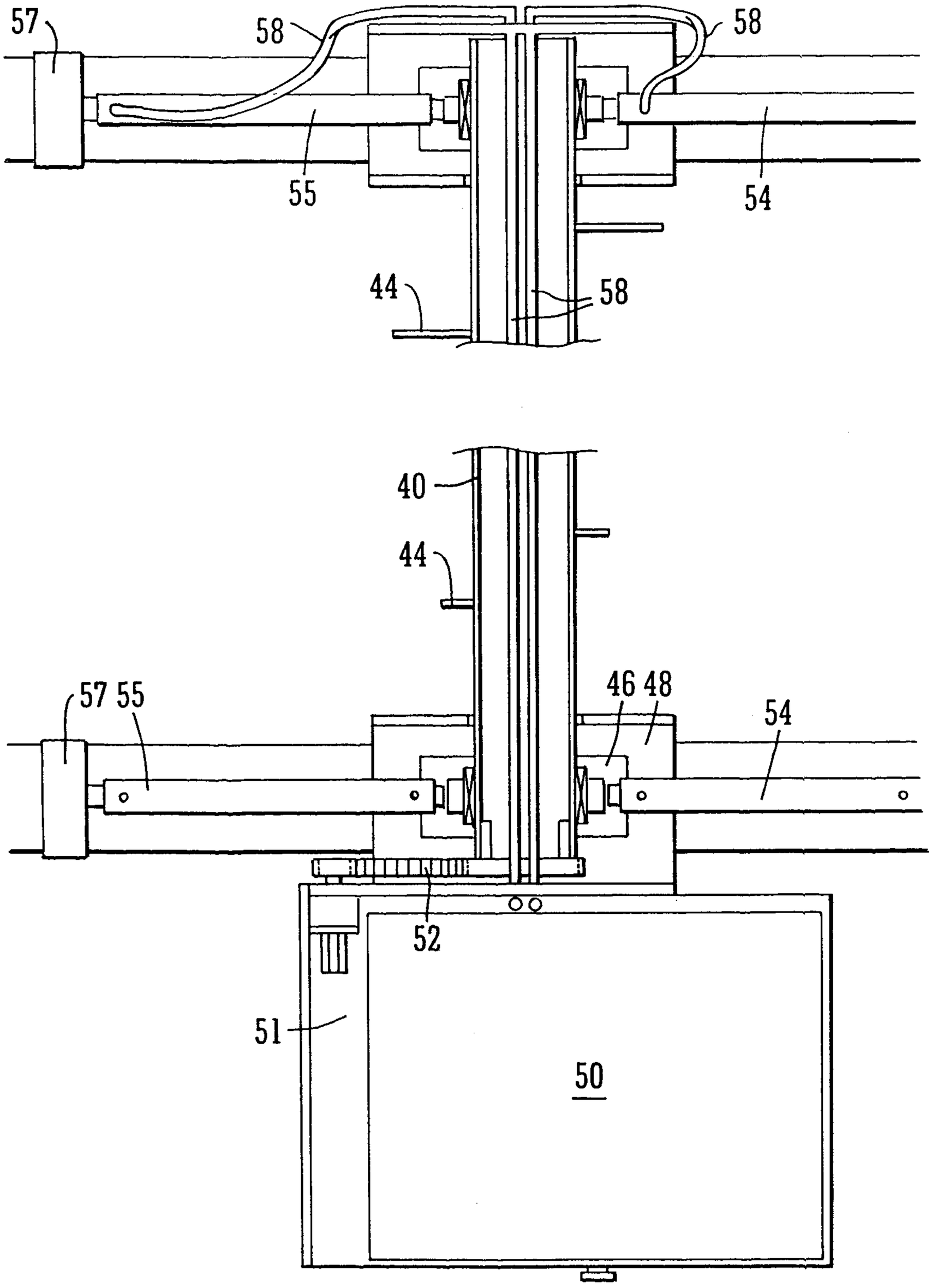

FIG. 4

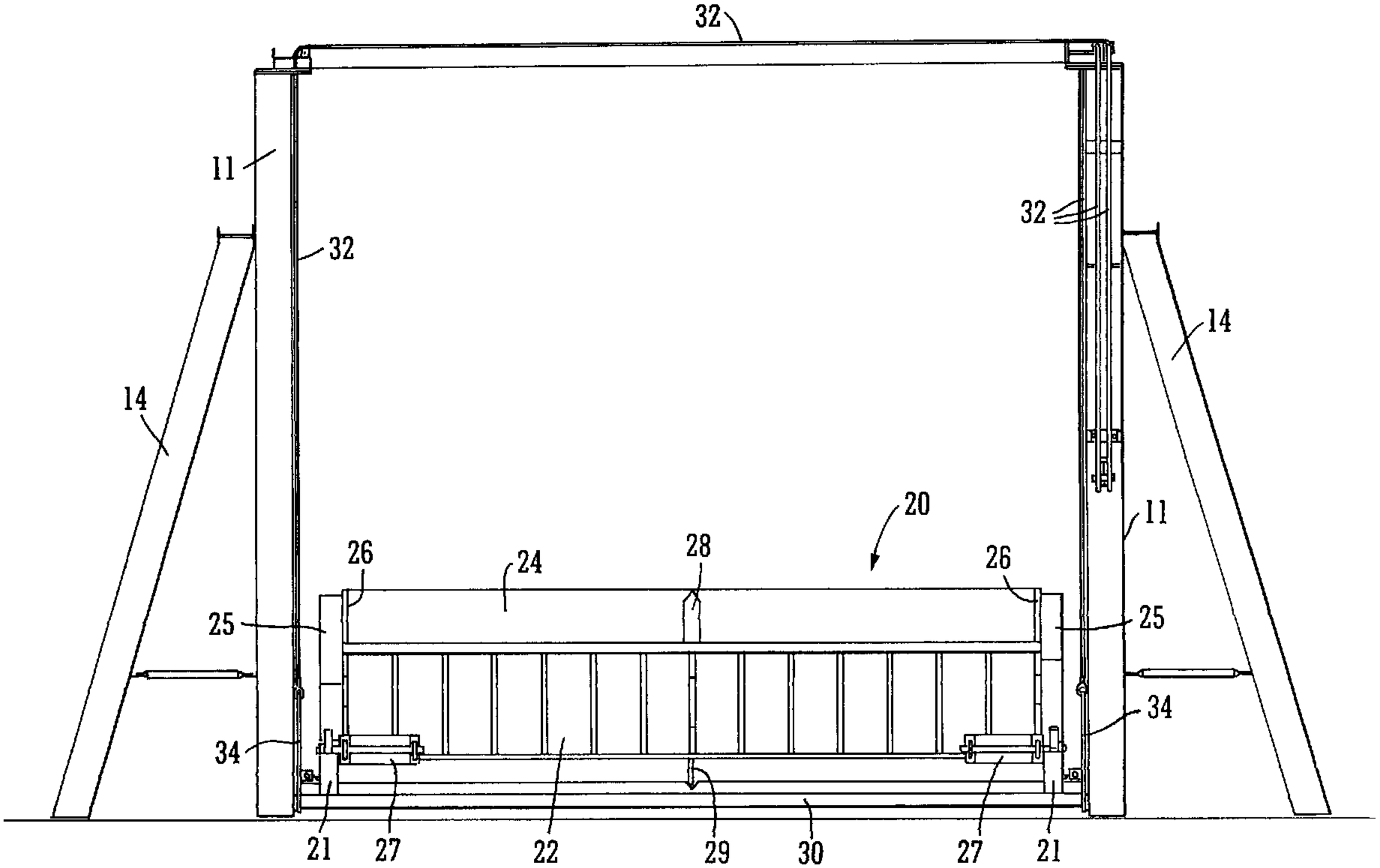
32
11
32
32
14
14
20
11
26
24
28
26
25
25
34
34
21
27
22
29
30
27
21