United States Patent [19]

Jacob

[11] **3,760,426**

[45] **Sept. 25, 1973**

[54] **ARTICLE OF APPAREL**

[75] Inventor: **Oscar Jacob,** Gundelsheim, Germany

[73] Assignee: **Greiff-Werke Gustav Winkler KG,** Bamberg, Germany

[22] Filed: **Nov. 8, 1971**

[21] Appl. No.: **196,564**

[30] **Foreign Application Priority Data**

Nov. 6, 1970 Germany ..... P 20 54 714.2

[52] **U.S. Cl.** **2/237**

[51] **Int. Cl.** **A41f 9/00**

[58] **Field of Search** 2/237, 221, 76, 236, 2/220

[56] **References Cited**

UNITED STATES PATENTS

2,581,627	1/1952	Bubb	2/237
2,206,505	7/1940	Klein	2/237
549,666	11/1895	Appelbaum	2/237

FOREIGN PATENTS OR APPLICATIONS

1,042,489	11/1958	Germany	2/237
697,622	9/1953	Great Britain	2/237

Primary Examiner—H. Hampton Hunter
Attorney—Michael S. Striker

[57] **ABSTRACT**

A trouser or an analogous article of apparel has a rear waistband portion whose two forwardly directed terminal sections are overlapped or entirely embraced by corresponding portions of a discrete front waistband portion. The forwardly directed portions of the rear waistband portion are provided with slots which may be reinforced by suitable inserts and extend in circumferential direction of the waistband portions, and studs on the front waistband portion are each arrestably received in one of the slots so that the amount of overlap can be adjusted.

17 Claims, 13 Drawing Figures

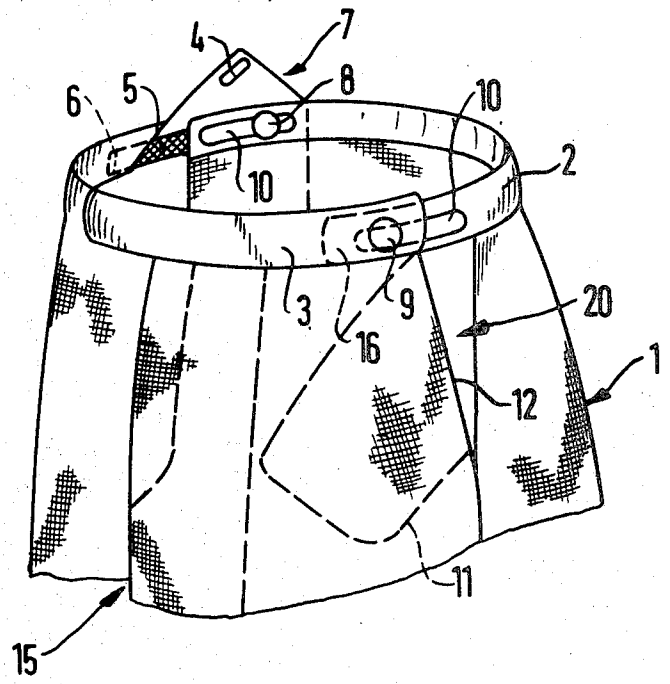

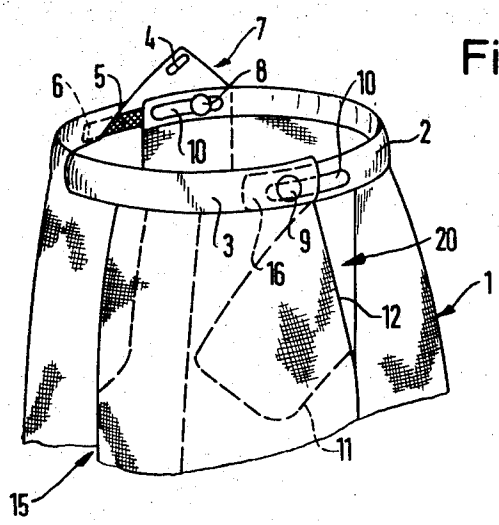

Fig. 1

Fig. 2

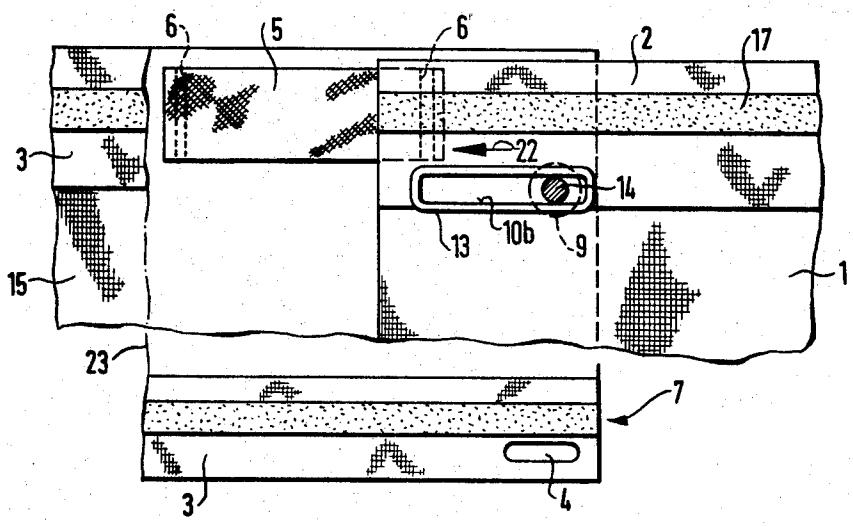

Fig. 3

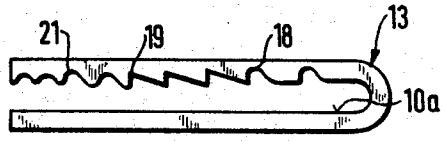

INVENTOR:
OSCAR JACOB

BY:
[illegible]
ATTORNEY

FIG. 4

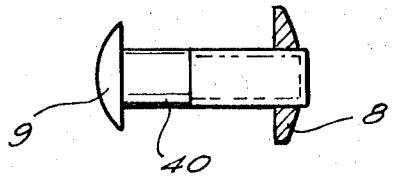

FIG. 5

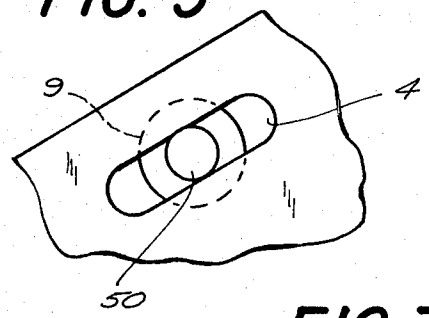

FIG. 6

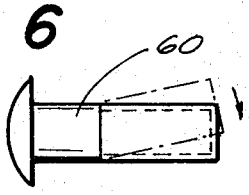

FIG. 7

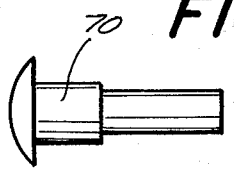

FIG. 8

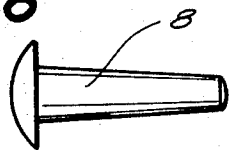

FIG. 13

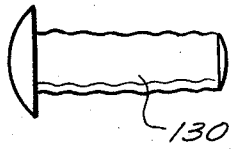

FIG. 9

FIG. 10

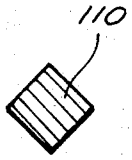

FIG. 11

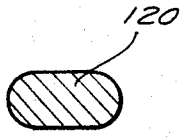

FIG. 12

ARTICLE OF APPAREL

BACKGROUND OF THE INVENTION

The present invention relates generally to an article of apparel, and more particularly to a garment for the lower part of the human torso, and for the thighs, or the thighs and the legs.

In particular, the present invention relates to a trouser or an analogous article of apparel, such as a skirt or the like.

It is already known to provide articles of apparel of the type here under discussion, that is trousers, skirts, slacks and the like--i.e., articles which have waistbands—of such connstruction that the waistband can be made adjustable. In other words the waistband can be expanded and contracted as the comfort of a wearer may demand. For instance, trousers constructed in this manner have been found particularly advantageous and comfortable for wear during long automobile trips when the wearer is forced to remain in a more or less unchanged position for extended periods of time. Under such circumstances it is frequently desirable to be able to relax the otherwise tight-fitting waistband of the trousers for additional comfort; on the other hand, during normal wear, that is when walking about or generally when not in circumstances requiring the additional comfort to be derived from relaxation of the waistband, it is desirable that the waistband be relatively snug-fitting for trim appearance.

A further consideration behind the construction of waistbands on such garments in the above manner is, of course, to simplify stocking of the garments because a garment having a waistband adjustable in the aforedescribed manner can evidently be made to fit a wider variety of waist sizes than would otherwise be possible.

However, the proposals which heretofore have been known in the art have not been entirely satisfactory in all respects and improvements are therefore desirable.

SUMMARY OF THE INVENTION

It is, accordingly, a general object of the present invention to provide a garment affording such improvements.

More particularly it is an object of the present invention to provide a trouser or an analogous article of apparel which affords such improvements.

Still more particularly it is an object of the invention to provide a trouser or analogous article of apparel having an adjustable waistband in which the adjustment—that is contraction or expansion--of the waistband is particularly simple, both as to the actual structural features and in use.

An additional object of the invention is to provide such a garment wherein the contraction and expansion of the waistband can be much more significant than was heretofore possible.

Another object of the invention is to make it possible for the waistband to adjust itself to the dimensions of the waist of the wearer.

In pursuance of the above objects, and of others which will become apparent hereafter, one feature of the invention resides in a trouser or analogous article of apparel which, briefly stated, comprises a rear waistband portion and a discrete front waistband portion, with these portions partially overlapping one another. A pair of slots is provided in one of the portions and extend in circumferential direction of the waistband portions, and a pair of studs are provided on the other of the portions and each arrestably received in one of the slots for varying the amount of overlap between the waistband portions.

Evidently, the slots can be provided on the rear waistband portion and the studs on the front waistband portion, or vice versa. In addition, at least one elastomeric band is provided, but advantageously two each in the region of one of the overlaps, with the opoosite ends of the band or bands being each secured to one of the waistband portions.

The novel features which are considered as characteristic for the invention are set forth in particular in the appended claims. The invention itself, however, both as to its construction and its method of operation, together with additional objects and advantages thereof, will be best understood from the following description of specific embodiments when read in connection with the accompanying drawing.

BRIEF DESCRIPTION OF THE DRAWING

FIG. 1 is a somewhat diagrammatic perspective view illustrating an embodiment of the invention;

FIG. 2 is a fragmentary detail view, substantially enlarged, of a portion of FIG. 1;

FIG. 3 is a side view of a component according to a further embodiment of the invention;

FIG. 4 is a side view of an adjustable stud;

FIG. 5 is a fragmentary perspective showing that the width of the slots corresponds to the stud diameter;

FIG. 6 is a side view of a stud made of flexible material;

FIG. 7 is a side view of one type of stud whose diameter is non-constant over the length of the stud;

FIG. 8 is a view similar to FIG. 7, but showing another type of stud having non-constant diameter;

FIG. 9 illustrates that the stud may have a semicircular cross section;

FIG. 11 illustrates that the stud may have a rightangular cross section;

FIG. 12 shows that the stud may have an oval cross section; and

FIG. 13 is a side view of a stud having a rough circufmerential surface.

DESCRIPTION OF THE PREFERRED EMBODIMENTS

Discussing the drawing in FIGS. 1–2 in detail, it will be seen that FIG. 1 shows a trouser, although this could be a slack, a skirt or a short, or the like. In any case, the trouser illustrated in FIG. 1 is provided at opposite lateral sides with slits 20 extending in vertical direction, usually along the seam connecting the rear portion of the trouser or analogous garment with the front portion thereof. Thus, the rear portion 1 is separated in the region downwardly from the waistband by the respective slits 20 from the front portion 15. The rear portion 1 has a rear waistband portion 2 and the front portion 15 has a front waistband portion 3. Although in the illustrated embodiment the waistband portion 3 is illustrated as of the tunnel-type and the waistband portion 2 as of the flat type, this is optional and any known and suitable type of waistband can be chosen.

In the illustrated embodiment the waistband portion 3 of the front portion 15 of the trouser overlaps in part the waistband portion 2 of the rear portion 1 of the trouser, meaning that the waistband portion 3 overlaps

the upper edge of the waistband portion 2 on the outer side of the latter, and extends downwardly of the inner side thereof to terminate approximately at the lower edge of the waistband portion 2, although it can of course extend downwardly below this lower edge. However, it is to be pointed out that the waistband portion 3 could simply overlap the waistband portion 2 at the exterior thereof without embracing it as is illustrated in FIGS. 1 and 2.

An elastomeric band 5, of rubber, synthetic plastic material or any suitable composition of materials well known in the garment industry, is shown in FIG. 1 and illustrated therein on an enlarged scale in FIG. 2. It is secured by seams 6 to the waistband portion 3 and the waistband portion 2, respectively, with its opposite ends and may be held at one of the waistband portions by a stud 14 which is still to be described.

In FIG. 1 it is shown how the inner part of the waistband portion 3, that is the part which overlaps the waistband portion 2 on the interior of the latter, is lifted up; this is not the normal position but is only illustrated in this manner to show clearly how the overlap is accomplished in this embodiment. Normally, the portion 7 overlies the inner side of the waistband portion 2 and a bottom 8 (see FIG. 1) extends through a buttonhole 4 provided in the portion 7. The band 5—or the two bands 5 if one is provided in the region of each overlap between the portions 2 and 3—tends to draw the two waistband portions together in a sense increasing their overlap and decreasing the circumference of the waistband composed of the two portions 2 and 3. This means that potentially an automatic adjustment of the dimension of the waistband can take place depending upon the waist size of a wearer.

The waistband portion 2 in the illustrated embodiment is provided with two elongated slots 10—which may be constructed in the manner of buttonholes or which may be reinforced with suitable plastic or the like—and which extend in circumferential direction of the waistband composed of the portions 2 and 3. The pair of studs 14, most clearly shown in FIG. 2, are provided each of which extends through one of the slots 10 and is provided at one end—for instance at the outwardly directed end—with a rivet 9 or the like whereas the other end—for instance the inwardly directed end—is provided with the already mentioned button 8. If the overlap between the portions 2 and 3 is reduced, that is if the waistband is expanded, then the band or bands 5 undergoes stretching and the stud 14 moves in the direction of the arrow 22 in its respectively associated slot 10. Conversely, when the overlap is reduced and the waistband contracts, then the stud 14 moves oppositely the direction of the arrow 22.

To provide an improved illustration of the waistband portion 3 the latter is shown in FIG. 2 as severed along the line 23 and shown beneath the main portion of FIG. 2, so that the inner side of the portion illustrated and designated with reference numeral 7 in FIG. 1 is shown facing outwardly in the separate lower part of FIG. 2.

A pocket 11 is illustrated diagrammatically, beginning at the pocket opening 12; this is shown only for proper orientation and clarity. Reference numeral 16 identifies in broken lines the area of overlap between the waistband portions 2 and 3.

FIG. 2 further shows how a guide element 13 can be constructed for the respective stud 14. Such a guide element may for instance be made of a double strip of sheet metal, of synthetic plastic material or the like, such as an elastomer; it may also be of rubber or other suitable material and advantageously can be produced by injection molding or in other similar manner. In any case, it extends through the slot 10*b* and the two overlying portions are overlapped and secured so that they clamp the material of the trousers and are thereby held in place. The stud 14 is illustrated in FIG. 2, but the button 8 thereof, which can usually be of one piece with the stud 14, has been omitted for the sake of clarity. The rivet 9 is illustrated in broken lines. FIG. 2 also shows a suitably constructed tape 17 provided on the inner side of the waistband and having a high coefficient of friction in order to engage the shirt of a wearer and prevent if from slipping with reference to the waistband, and vice versa.

FIG. 3, shows a guide element 13 which is open at one end and which has a slot 10*a* which, unlike the embodiment in FIGS. 1 and 2, does not have smooth boundary edges but is provided with stepped configurations. In the illustrated embodiment there are provided rounded recesses 18, but it is also shown that pointed teeth 19 may be provided, to show just two possibilities. Evidently, other possibilities, such as a wavy configuration or the like can also be provided as long as they permit engagement of the stud 14 therein in a sense arresting the same against movement lengthwise of the slot 10*a*. In this embodiment the adjustment is effected by permitting the stud to become arrested by a selected means 18 or tooth 19, depending upon the extent of overlap desired.

It will be appreciated that in place of the elastic band 5, each area of overlap may be provided with one or several such bands, and that the slots 10, 10*a* or 10*b* need not be located beneath the band 5 but at the level of the tape 17. In addition, the waistband portion 2 could be extended to the front in order to have the respective slot 10, 10*a* or 10*b* be located beneath the respective band 5. The latter can also be sewn or otherwise secured to the inner side of the waistband portion 2 in ordet to obtain a still better overlapping of the waistband portions 2 and 3, but in this case the end or ends of the waistband portion 2 would have to be left open (not closed by seams) so as not to interfere with the operation of the band 5.

The stud 14 could be provided with a thread if desired, in order to adjust the distance between rivet 9 and button 8 by relative turning displacement in order to obtain a clamping effect and thus fix the position of the stud 14 with respect to the slot 10, 10*a* in this manner, rather than in the manner illustrated in FIG. 3. Evidently, other possibilities also exist.

FIG. 4 shows a stud 40 wherein the rivet 9 and the button 8 are provided with cooperating threads so that the length of stud 40 can be varied by relative turning of rivet 9 and button 8.

FIG. 5 shows that the width of the slots 4 corresponds at least to the diameter of the respective stud 50 extending therethrough.

In FIG. 6 I have illustrated a flexible stud 60 whose two legs permanently tend to spread apart and can be deflected toward each other (see the arrow) on insertion into slot 4.

FIG. 7 shows one type of stud, designated with reference numeral 70, whose diameter varies over the length of the stud, i.e., whose diameter is non-constant.

Another similar type of stud **80** is shown in FIG. **8**, which is selfexplanatory.

FIGS. **9, 10, 11** and **12** respectively show cross sections of studs **90, 100, 110** and **120.** Stud **90** has a circular cross section, stud **100** a semi-circular one. The cross section of stud **110** is right-angular, and that of stud **120** is oval.

Finally, FIG. **13** shows a stud **130** whose circumference is rough, rather than being smooth.

Naturally, the waistband can be provided at the outer side with belt loops, or a belt—elastic or otherwise—can be provided, either at the exterior or the interior of the waistband in known manner.

The tape **17** may be provided all along the inner side of the waistband or it may only be provided at certain locations.

The overlap can be arrested and adjusted by withdrawing the button **8** or similar analogous means from the buttonhole **4** or inserting it therethrough. Alternately, if this is not done, then the waistband will adjust itself automatically to the waist size of a wearer who puts on the garment.

It will be understood that each of the elements described above, or two or more together, may also find a useful application in other types of constructions differing from the types described above.

While the invention has been illustrated and described as embodied in an article of apparel, it is not intended to be limited to the details shown, since various modifications and structural changes may be made without departing in any way from the spirit of the present invention.

Without further analysis, the foregoing will so fully reveal the gist of the present invention that others can by applying current knowledge readily adapt it for various applications without omitting features that, from the standpoint of prior art, fairly constitute essential characteristics of the generic or specific aspects of this invention and, therefore, such adaptations should and are intended to be comprehended within the meaning and range of equivalence of the following claims.

What is claimed as new and desired to be secured by Letters Patent is set forth in the appended claims:

1. A trouser or analogous article of apparel, comprising one front portion and one rear portion, said front portion being separated from said rear portion in two regions, downwardly from the waistband, by two laterally, substantially vertically disposed slits; a front waistband portion and a rear waistband portion separated in said regions but partially overlapping each other in said regions; at least one elastomeric band connecting said front and said rear waistband portion and positioned between said front and said rear waistband portion in one of said regions; two circumferentially extending slots, one of said slots being located in one of said waistband portions in end of said regions; two studs, one of said studs being provided on said other waistband portion in each of said regions thereof and each extending through one of said slots; and means for locking said studs in said slots against displacement longitudinally of the same, whereby the overlapping of said front and said rear waistband portions can be set at a desired extent.

2. An article as defined in claim **1**, each of said studs having opposite ends one of which is provided with a rivet and the other of which is provided with a button.

3. An article as defined in claim **2**, wherein the distance between said rivet and button is adjustable.

4. An article as defined in claim **1**, wherein said front waistband portion embraces respective terminal sections of said rear wasitband portion.

5. An article as defined in claim **1**, further comprising a pair of guide members for said studs provided on said one waistband portion.

6. An article as defined in claim **1**, said slots having a width corresponding at least to the diameter of the respective studs.

7. An article as defined in claim **1**, wherein said studs are composed of flexible material.

8. An article as defined in claim **1**, wherein said studs are each of non-constant diameter over their respective length.

9. An article as defined in claim **1**, wherein said studs are of at least part-circular cross-section.

10. An article as defined in claim **1**, whereas said studs are of polygonal cross-section.

11. An article as defined in claim **1**. wherein said studs have smooth surfaces.

12. An article as defined in claim **1**, wherein said studs have rough surfaces.

13. An article as defined in claim **1**, wherein said studs each have at least one enlarged end portion.

14. An article as defined in claim **1**, further comprising a guide member for each of said studs and composed of elastomeric material.

15. An article as defined in claim **1**, each of said slots having two longitudinally extending edges at least one of which is stepped.

16. An article as defined in claim **1**, said band being located in a plane different from those of said slots.

17. An article as defined in claim **1**, said other waistband portion being provided with a pair of button holes each located in one of said regions, and each of said studs extending through one of said button holes and one of said slots.

* * * * *