May 5, 1964 J. O. SCHENKLER 3,131,817

HANGER ASSEMBLY

Filed Oct. 31, 1961 2 Sheets-Sheet 1

FIG. 1

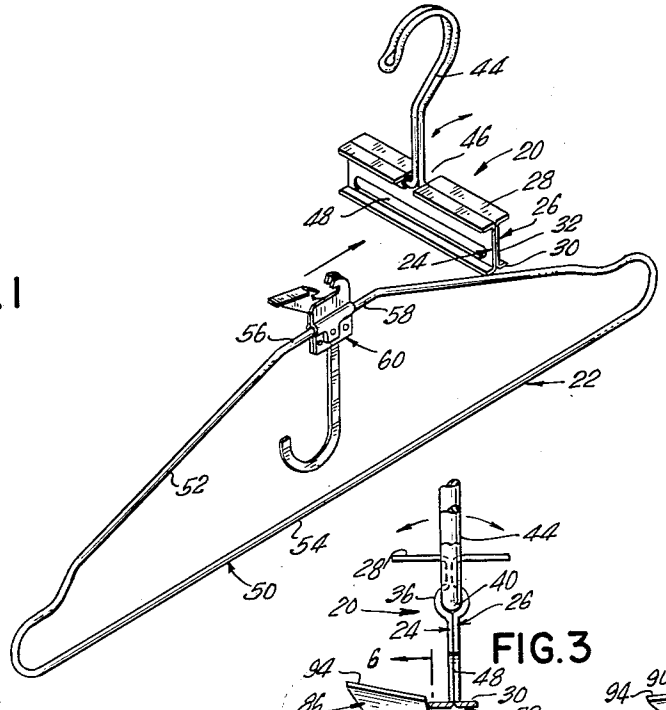

FIG. 2

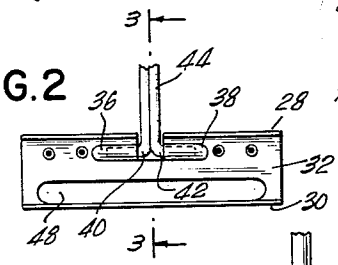

FIG. 3

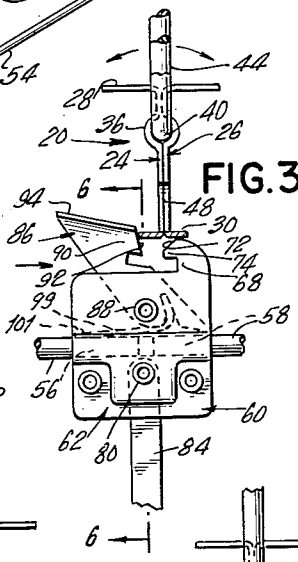

FIG. 4

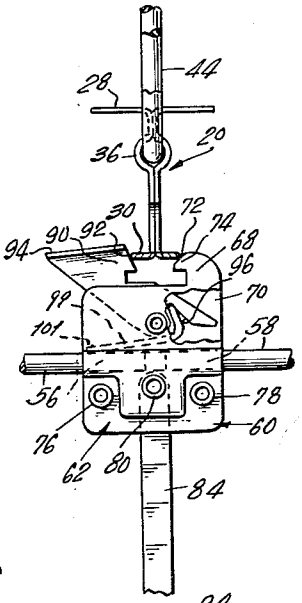

FIG. 5

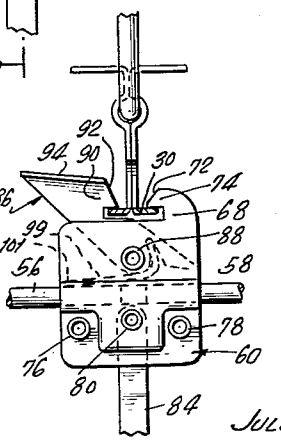

FIG. 6

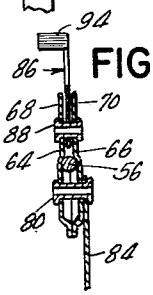

FIG. 8

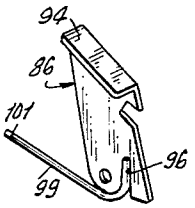

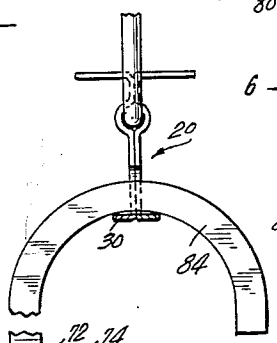

FIG. 7

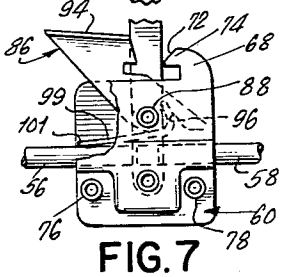

INVENTOR.
JULES O. SCHENKLER

BY Amster & Levy

ATTORNEYS

May 5, 1964 J. O. SCHENKLER 3,131,817

HANGER ASSEMBLY

Filed Oct. 31, 1961 2 Sheets-Sheet 2

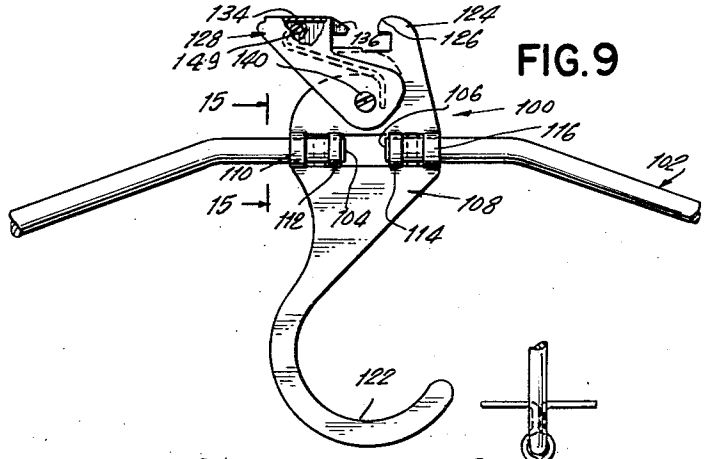

FIG. 9

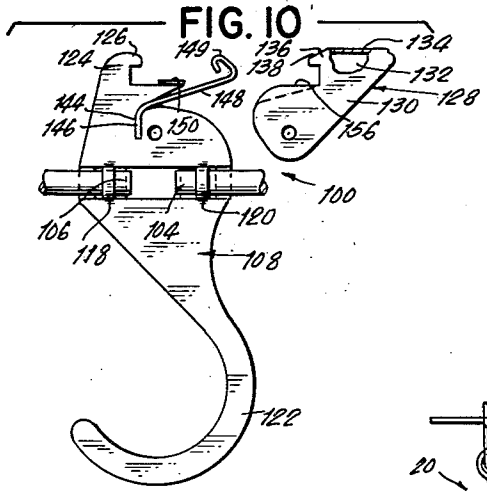

FIG. 10

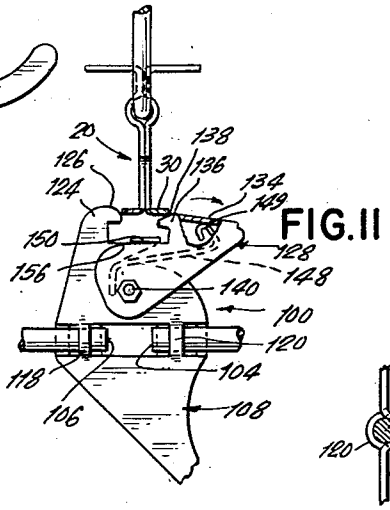

FIG. 11

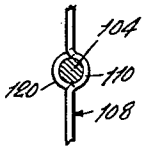

FIG. 15

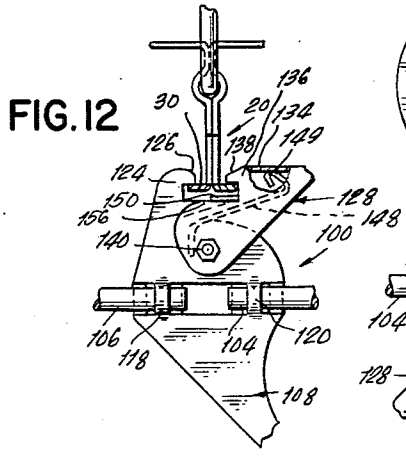

FIG. 12

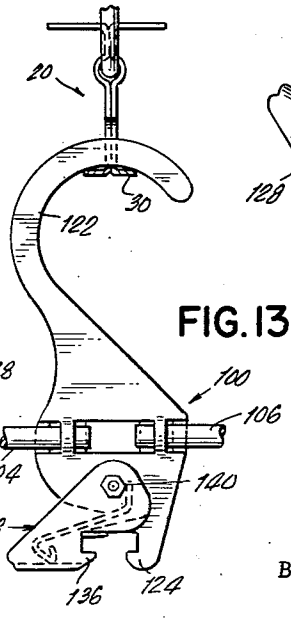

FIG. 13

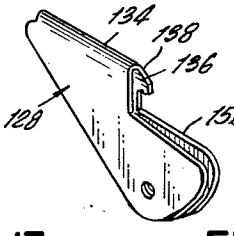

FIG. 14

INVENTOR.
JULES O. SCHENKLER

BY Amster & Levy

ATTORNEYS

United States Patent Office 3,131,817 Patented May 5, 1964

3,131,817

HANGER ASSEMBLY

Jules O. Schenkler, 69—17 210th St., Bayside 64, N.Y.

Filed Oct. 31, 1961, Ser. No. 148,911
5 Claims. (Cl. 211—113)

This invention relates to a hanger assembly for the removable mounting of clothes hangers within an article of luggage such as a suitcase.

In various articles of luggage, such as suitcases, flight bags or the like, hanger assemblies are often provided for mounting clothes hangers carrying suits or other garments which are folded within the luggage. A serious disadvantage in the conventional arrangements provided in these articles of luggage is occasioned by the fact that after the hangers have been removed from the article of luggage there is often no mounting arrangement with which the hooks forming part of the hangers can be attached in a convenient manner.

It is therefore an object of the present invention to provide a hanger assembly for luggage which includes a plurality of hanger units each having a foldable hook which is adapted to be used in mounting the hanger with the garment thereon a conventional closet bar but which may be used in conjunction with the mounting bar forming one of the elements of the hanger assembly which in turn may be supported on any convenient object such as a conventional support provided in an automobile, a nail on a rafter, or the like. This facilitates the utilization of the mounting bar to provide means for supporting a plurality of garments in a convenient manner even when a conventional closet bar or like support is not available.

Another object of the invention is to provide a hanger assembly of the type described in which a hanger mounting bar is arranged with a first pivoted hook for securing a hanger mounting bar on any suitable protrusion and further includes a plurality of hanger units each provided with other pivoted hooks for engagement with the hanger mounting bar or alternatively a conventional closet bar.

Still another object of the invention is the provision of a hanger assembly of the type described which has a suitable automatically operating clip assembly so that each hanger unit may be automatically engaged with a hanger bar upon merely pressing the hanger unit upwardly against the hanger bar.

A further object of the invention is the provision of a hanger assembly of the type described in which the mounting bar for the hanger units is itself removably mounted within the luggage, so that the mounting bar may be moved simultaneously with all of the hanger units and clothing carried thereby. The mounting bar is also provided with a foldable hook member by means of which it may be hung on any suitable protrusion so that all the clothing within the luggage may be moved as a unit and hung together quickly and easily.

In accordance with the concepts of the invention there is provided an embodiment of the hanger assembly for use in an article of luggage which comprises a hanger mounting bar of substantially I-shape in cross section. The hanger mounting bar has upper and lower flanges interconnected by a web which is provided with an elongated slot therein. A first hook is pivoted to the hanger mounting bar for facilitating engagement of the hanger mounting bar and the suspension thereof from any convenient object such as the hook provided in an automobile, a nail driven in a rafter, or the like, especially at locations such as camping sites, hunting cabins or the like, where conventional closet bars are not available or space is at a premium. There are provided a plurality of hanger units which are detachably mounted on the mounting bar. Each of the hanger units include a garment support frame and a clip assembly secured to the garment

frame, with another hook pivoted to the clip assembly for enabling each garment to be individually suspended by each of the other hooks as desired. The clip assembly is provided with means for automatically enabling each individual hanger unit to be engaged with the mounting bar without requiring manual operation of the latch members. This is because very often the garments are so bulky that it is difficult if not impossible to place one's hands on the individual latch members. In carrying out this embodiment of the invention a movable latch member is pivoted to a fixed latch member and spring means are disposed between the latch members for urging said movable latch toward said fixed latch member. Each of the latch members is provided with opposed jaws adapted to extend toward the slot of the web, the jaws having upper edges forming diverging cam surfaces automatically separating the jaws as the clip assembly is pressed against the mounting bar with the mounting bar engaging the cam surfaces to separate the jaws.

Still further objects and features of the invention which reside in the provision of a hanger assembly that is simple in construction, capable of being manufactured by mass production methods out of various readily available material such as metal, plastics, and the like, and which is inexpensive to produce thereby permitting wide use and distribution.

These, together with the various ancillary objects and features of the invention which will become apparent as the following description proceeds, are attained by this hanger assembly, preferred embodiments of which have been illustrated in the accompanying drawings, by way of example only, wherein:

FIG. 1 is an exploded perspective view of one embodiment of the hanger assembly in accordance with the present invention;

FIG. 2 is an enlarged partial elevational view of the hanger mounting bar;

FIG. 3 is a partial vertical sectional view of the hanger assembly showing the manner in which a hanger unit is secured on the hanger mounting bar;

FIG. 4 is a view similar to that of FIG. 3, but illustrating the various components of the hanger assembly during a further stage of automatically securing the hanger unit on the hanger mounting bar;

FIG. 5 is a view similar to FIG. 3, but showing the hanger assembly with the hanger unit supported on the hanger mounting bar;

FIG. 6 is a sectional detail view taken along the plane of line 6—6 in FIG. 3 illustrating particularly the construction of the clip assembly;

FIG. 7 is an elevational view with portions broken away illustrating one arrangement of parts with the pivoted hook of the hanger unit secured to the hanger mounting bar;

FIG. 8 is a perspective view of the movable latch member forming a portion of the clip assembly;

FIG. 9 is an elevational view of a modified form of the invention with a portion thereof broken away to show the mounting arrangement of the spring means for urging the movable latch member to its closed position;

FIG. 10 is an exploded elevational view with parts shown in section of the modified form of the invention looking at the opposite side thereof from FIG. 9;

FIG. 11 is a partial elevational view with parts shown in section illustrating the manner in which this form of the invention is automatically secured to the hanger mounting bar;

FIG. 12 is a view similar to FIG. 11, but illustrating the latch members engaged with the hanger mounting bar;

FIG. 13 is a view of the invention shown with the hook thereof engaged with the hanger mounting bar;

FIG. 14 is an enlarged perspective view of the latch member forming part of the hanger unit; and

FIG. 15 is a sectional detail view taken along the plane of line 15—15 in FIG. 9.

With continuing reference to the accompanying drawings, wherein like reference numerals designated similar parts throughout the various views, and with initial intention directed to the embodiment of the invention as shown in FIGS. 1 through 8, it will be seen that there is disclosed a hanger mounting bar generally indicated at 20 with which a plurality of hanger units generally indicated at 22 are adapted to be utilized. The hanger mounting bar is of the type that is adapted to be associated with a bracket fixed within an article of luggage such as a suitcase whereby the bracket 20 may be slid into position.

The hanger mounting bar 20 is constructed of a pair of channel shaped members 24 and 26 which are arranged in back to back relationship and may be riveted, welded, or otherwise fastened together. The channel shaped members when so secured form, in conjunction with each other an upper flange 28 and a lower flange 30 interconnected by a web portion 32 so as to form a mounting bar of an I-shape in cross section.

Each of the channel shaped members have opposed semicylindrical projections 36 and 38 formed therein for receiving opposed ends 40 and 42 of a hook member 44 preferably formed of a double thickness of wire. The hook member 44 is, because of the engagement of the ends 40 and 42 within the confines formed by the projections 38 and 40, pivotally secured to the mounting bar. The upper flange 28 is cut away at the center portion 46 to permit the hook to be folded to a desired position. The hanger mounting bar is provided with an elongated slot 48 therein which terminates short of the ends of the web 32.

Each of the hanger units 22 are of similar construction and includes a garment supporting frame 50 of suitable shape for supporting the various parts of the garment. The garment supporting frame 50 includes an upper portion 52 on which a suit or dress may be readily mounted and includes a lower portion 54 over which trousers or the like may be positioned. The ends 56 and 58 of the upper portion 52 are received in a clip assembly 60.

The clip assembly 60 comprises a fixed latch member 62 which includes a pair of latch plates 64 and 66 having a suitable configuration to form a jaw including jaw sections 68, 70 at the upper parts thereof which jaw sections are provided with tapered upper surfaces 72 as well as the hook like jaw 74. The two plates 64 and 66 are secured together by rivets 76, 78 but are arranged in spaced relationship to each other for receiving the ends 56 and 58 of the garment supporting frame 50, it being noted that each of the plates 64 and 66 are suitably contoured to receive the ends 56 and 58 therebetween. Also securing the latch plate 64 and 66 together is a rivet 80 which also extends through one end 82 of a hook 84. The rivet 80 therefore forms the pivotal connection for the hook 84 to the clip assembly 60.

A movable latch member 86 is pivoted to the fixed latch member 62 by means of a rivet or like fastener 88. The movable latch member is provided with a jaw 90 adapted to be positioned in opposition to the jaw 74 and has a tapered surface 92 corresponding to the tapered surface 72. A flange 94 is formed on the upper surface of the movable latch member 86 for enabling the upper latch member 86 to be conveniently depressed and thereby rotated.

The movable latch member 86 is provided with a recess 96 in the lower surface thereof for receiving one end of a spring 99. The spring 99 is engaged between the fixed latch plates 64 and 66 and has its end 101 engaging the end 56 of the garment support frame 50. Hence, the spring 99 normally urges the movable latch member

86 into a closed position with the jaw 90 adjacent the jaw 74.

The hanger unit 22 may be easily secured to the mounting bar 20 by merely grasping the hanger unit and depressing the movable latch member by the thumb or other finger pressing downwardly on the flange 94 to thereby open the jaws 74 and 90 whereby the clip assembly may be engaged with the lower flange 30 of the mounting bar 20. On the other hand, when there is a bulky garment or the like mounted on the garment supporting frame 50, it is often desirable to use the automatic feature of the present invention to engage the hanger mounting unit with the hanger mounting bar.

It is to be especially noted that each individual hanger with or without the garment attached thereto can be removed from the mounting bar without requiring removal of any other hanger even when the mounting bar is in the article of luggage. This is accomplished by pressing downward on flange 94. To accomplish the automatic attachment of the hanger unit to the mounting bar, it is necessary to press the hanger unit upwardly so that the diverging cam engaging surfaces 72 and 92 engage the flange 30. Further pressing will cause the movable latch member 86 to move from the position shown in FIG. 3 to the position as shown in FIG. 4 permitting the flange 30 to be inserted between the jaws 74 and 90.

Then further pressing upward of the hanger unit will position the flange 30 between the jaws as shown in FIG. 5 whereupon the movable latch member 86 will be forced by the spring 100 to engage the mounting bar.

It is to be noted that in the alternative the hook 84 can be swung upwardly from the position as shown in FIG. 1 to the position as shown in FIG. 7 wherein the hook may be engaged within the slot 48, the mounting bar 20 being suspended by its hook 44.

It is noted that when this hanger assembly is utilized for supporting articles of clothing or the like outside of the article of luggage, the mounting bar 20 may be supported on a rack, nail, or other suitable member whereupon a plurality of the hanger units 50 may be suspended from the mounting bar 20 either by means of the fixed and movable latch members 62 and 86 or by means of the hanger 84.

Referring now to the embodiments of the invention as is shown in FIGS. 9 through 14, it will be noted that the hanger unit which is generally indicated at 100 includes a garment supporting frame 102 having ends 104 and 106 rotatably mounted on a fixed latch member 108. The fixed latch member is provided with a plurality of semicircular bearing elements 110, 112, 114, 116, 118, and 120 pressed from the fixed latch member 108 on either side thereof so as to form a bearing mounting for the ends 104, 106 of the garment supporting frame 102. Thus, the fixed latch member 108 is rotatable relative to the garment supporting frame 102. The fixed latch member has a hook 122 at one end thereof, the other end being formed with a jaw 124 having a tapered cam engaging surface 126.

The movable latch member 128 is formed of two plate sections 130 and 132 which are integrally connected by an upper interconnecting portion 134. The plate 132 is formed with a jaw 136 adapted to be arranged in opposition to the jaw 124. The plate 134 has a cam engaging surface 138 arranged in diverging relationship to the cam engaging surface 126. The plates 130 and 132 are designed and shaped to be positioned on either side of the fixed latch member 108 and the movable latch member 128 is riveted or secured by a screw fastener or the like 140 to form a pivotal connection between the fixed latch member 108 and the movable latch member 128.

As can be seen in FIG. 10, the fixed latch member 108 is provided with a suitable recess 144 for receiving the end 146 of a spring 148, the other end 149 of the spring 148 engaging the interconnecting portion 134 of

the movable latch member. The spring **148** normally presses the movable latch member into a position where the jaw **136** is closely adjacent the jaw **134**. The fixed latch member **108** is provided with a flange or detent **150** which extends normal thereto and forms a stop as can be seen best in FIG. 11 for the movable latch member **128**, the upper surface **156** of the movable latch member engaging the stop **150** in the closed position of the jaws **124** and **136**.

As can be seen in FIG. 11, when it is desired to automatically secure the hanger unit **100** on the mounting bar **20**, it is merely necessary to press the hanger unit **100** upwardly until the cam engaging surfaces **126** and **138** engage the flange **30**. The cam action of the flange **30** relative to the cam engaging surfaces **126** and **138** will open up the jaws **124** and **136** whereby the flange **30** may be readily grasped in the position as shown in FIG. 12. Alternatively, the central connecting portion **134** may be readily depressed by the thumb or other finger to separate the jaws to enable engagement of the hanger unit with the mounting bar **20**.

Of course, the entire clip assembly formed by the fixed latch member **108** and the movable latch member **128** can be rotated to the position as shown in FIG. 13 whereby the hook **122** may be used for engagement with a conventional closet bar or the like or may be used to engage within the slot **48** of the mounting bar **20** for support of the hanger unit.

A latitude of modification, change and substitution is intended in the foregoing disclosure and in some instances some features of the invention will be employed without a corresponding use of other features. Accordingly, it is appropriate that the appended claims be construed broadly and in a manner consistent with the spirit and scope of the invention herein.

What I claim is:

1. A hanger assembly for use in an article of luggage comprising a hanger mounting bar, a first hook pivoted to said hanger mounting bar, and at least one hanger unit detachably mounted on said mounting bar, said hanger unit including a garment support frame, a clip assembly secured to said garment frame for engaging said mounting bar, and a second hook pivoted to said clip assembly for movement relative to the latter from a retracted position in which said second hook depends from said clip assembly within the garment support frame to an extended position in which said second hook is upstanding from said clip assembly and projects outwardly of said garment support frame.

2. A hanger assembly for use in an article of luggage comprising a hanger mounting bar, horizontal flanges extending from the lower end of said hanger mounting bar, a first hook pivoted to said hanger mounting bar, and at least one hanger unit detachably mounted on said mounting bar, said hanger unit including a garment support frame, a clip assembly secured to said garment frame, a second hook pivoted to said clip assembly, said clip assembly including a fixed member formed integrally therewith and having a jaw, a movable member pivoted to said fixed member and having a jaw aligned with and facing the jaw of said fixed member, and spring means urging said movable member toward said fixed member with said jaws providing releasable latch means for mounting of said hanger unit on said mounting bar.

3. A hanger assembly for use in an article of luggage comprising a hanger mounting bar, horizontal flanges extending from the lower end of said hanger mounting bar, a first hook pivoted to said hanger mounting bar, and at least one hanger unit detachably mounted on said mounting bar, said hanger unit including a garment support frame, a clip assembly secured to said garment frame, a second hook pivoted to said clip assembly, said clip assembly including an upstanding fixed latch member, an upstanding movable latch member pivoted to said fixed latch member, and spring means disposed between said latch members urging one of said latch members towards the other to grasp said mounting bar, said latch members being provided with opposed jaws, the upper edges of said jaws having diverging cam surfaces for automatically separating said jaws as said clip assembly is pressed upwardly against said mounting bar flanges.

4. A hanger assembly for use in an article of luggage comprising a hanger mounting bar, horizontal flanges extending from the lower end of said hanger mounting bar, a first hook pivoted to said hanger mounting bar, and at least one hanger unit detachably mounted on said mounting bar, said hanger unit including a garment support frame, a clip assembly secured to said garment frame, a second hook pivoted to said clip assembly, said clip assembly including a fixed latch member formed integrally with and having a jaw, a movable latch member pivoted to said fixed latch member, and having a jaw aligned with and facing the jaw of said fixed latch member and spring means disposed between said latch members urging one of said latch members towards the other to grasp said mounting bar, said movable latch member having a finger piece on the upper surface thereof for manual depression of said movable latch member to facilitate engagement and disengagement of said latch member jaws from said mounting bar flanges.

5. A hanger assembly for use in an article of luggage comprising a hanger mounting bar, said mounting bar being of substantially I-shape in cross section and having upper and lower flanges interconnected by a web, said web having an elongated slot therein, a first hook pivoted to said hanger mounting bar, and at least one hanger unit detachably mounted on said mounting bar, said hanger unit including a garment support frame, a clip assembly secured to said garment frame, a second hook pivoted to said clip assembly, said clip assembly including a fixed latch member formed integrally therewith and having a jaw, a movable latch member pivoted to said fixed latch member and having a jaw aligned with and facing the jaw of said movable latch member, and spring means disposed between said latch members urging one of said latch members towards the other to bring said jaws into a position grasping said mounting bar, said jaws having upper edges forming diverging cam surfaces for automatically separating said jaws as said clip assembly is pressed against said mounting bar.

References Cited in the file of this patent

UNITED STATES PATENTS

1,667,266	Papp	Apr. 24, 1928
2,285,745	Ritter	June 9, 1942
2,499,188	Freeman	Feb. 28, 1950
2,551,913	Toby	May 8, 1951
2,701,082	Cohen	Feb. 1, 1955
3,035,673	Schenkler	May 22, 1962