US 20060010896A1

(19) **United States**

(12) **Patent Application Publication** (10) **Pub. No.: US 2006/0010896 A1**

Choi et al. (43) **Pub. Date: Jan. 19, 2006**

(54) **AIR-CONDITIONING SYSTEM**

(75) Inventors: **Soo Geun Choi**, Gimhae-si (KR); **Sang Kyun Baek**, Changwon-si (KR)

Correspondence Address:
BIRCH STEWART KOLASCH & BIRCH
PO BOX 747
FALLS CHURCH, VA 22040-0747 (US)

(73) Assignee: **LG Electronics Inc.**, Seoul (KR)

(21) Appl. No.: **11/177,311**

(22) Filed: **Jul. 11, 2005**

(30) **Foreign Application Priority Data**

Jul. 12, 2004 (KR) P2004-0054083

Publication Classification

(51) **Int. Cl.**
F25D 23/12 (2006.01)
F25D 17/06 (2006.01)

(52) **U.S. Cl.** **62/262**; 62/426

(57) **ABSTRACT**

An air-conditioning system is disclosed, which has an improved performance. The air-conditioning system includes a cabinet sucking the indoor air from the front and discharging the conditioned air to the side, an indoor fan received in the cabinet, and at least one indoor heat exchanger provided at one side of the indoor fan in the cabinet to perform heat exchange with the air flowing inside the cabinet.

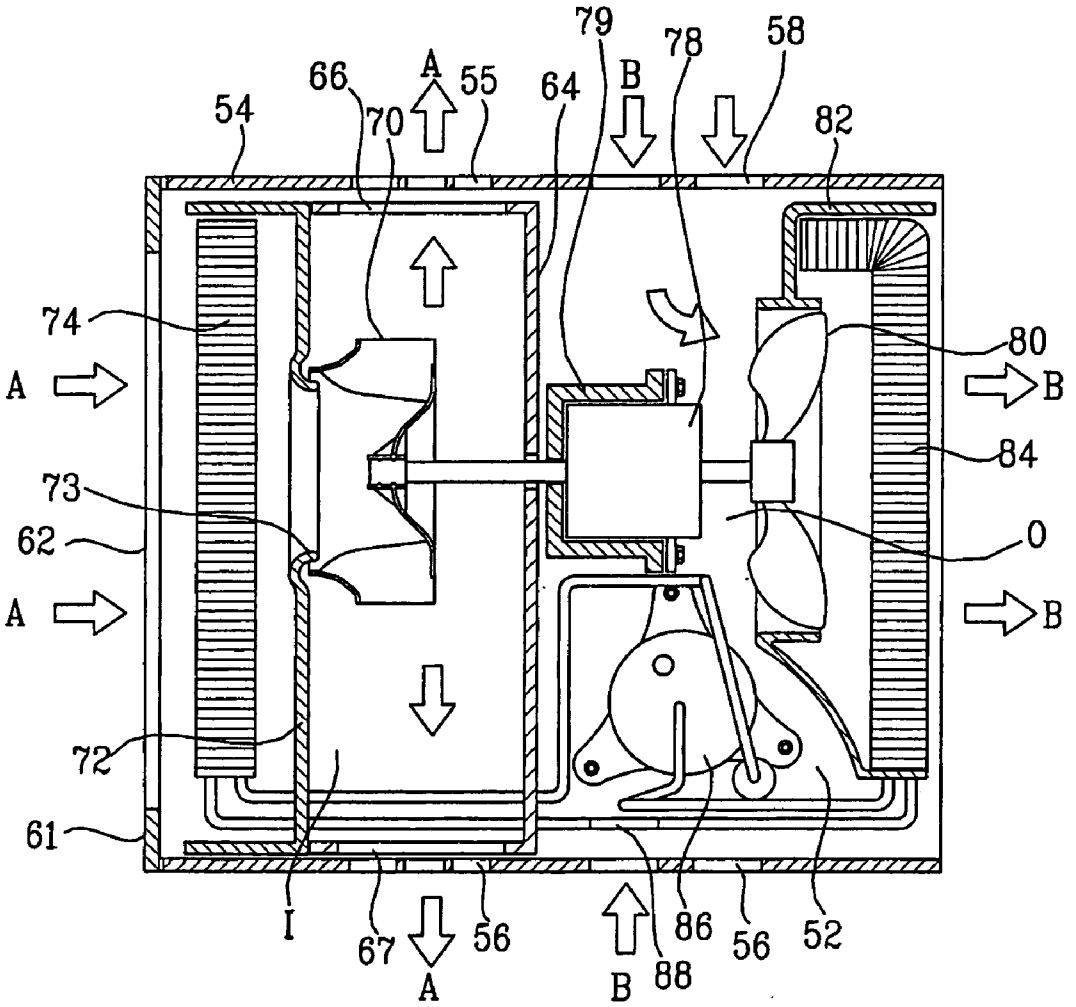

FIG. 1

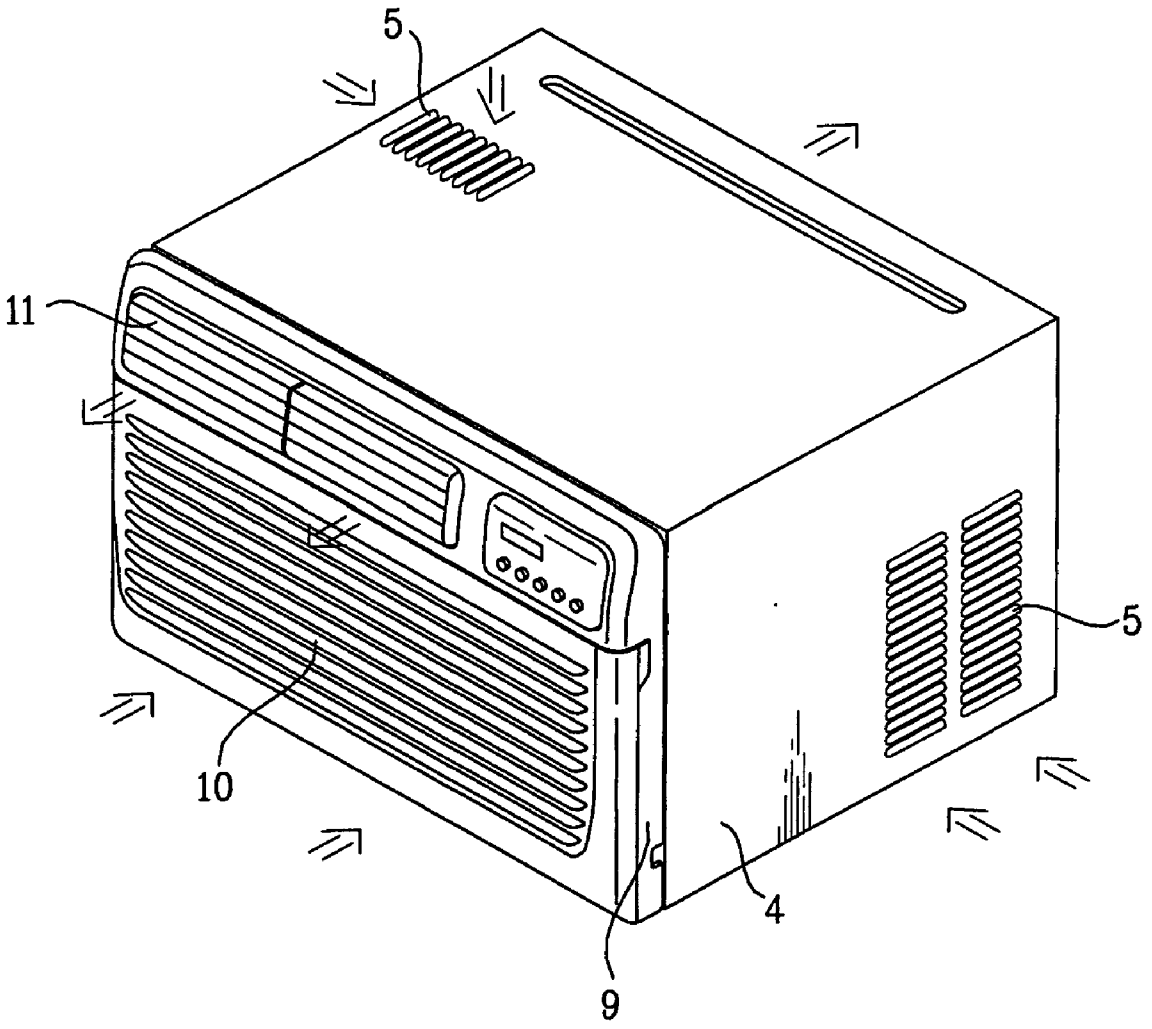

FIG. 2

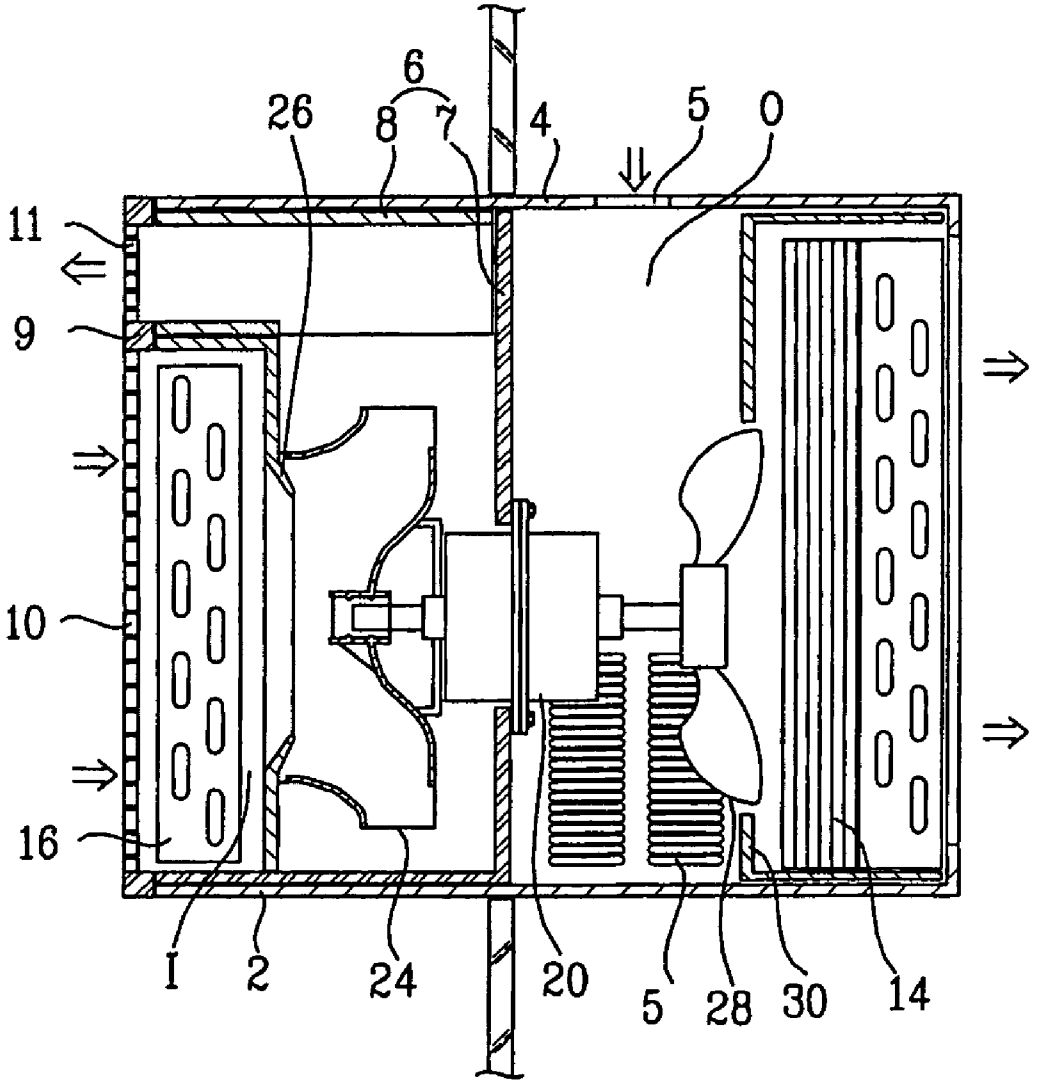

FIG. 3

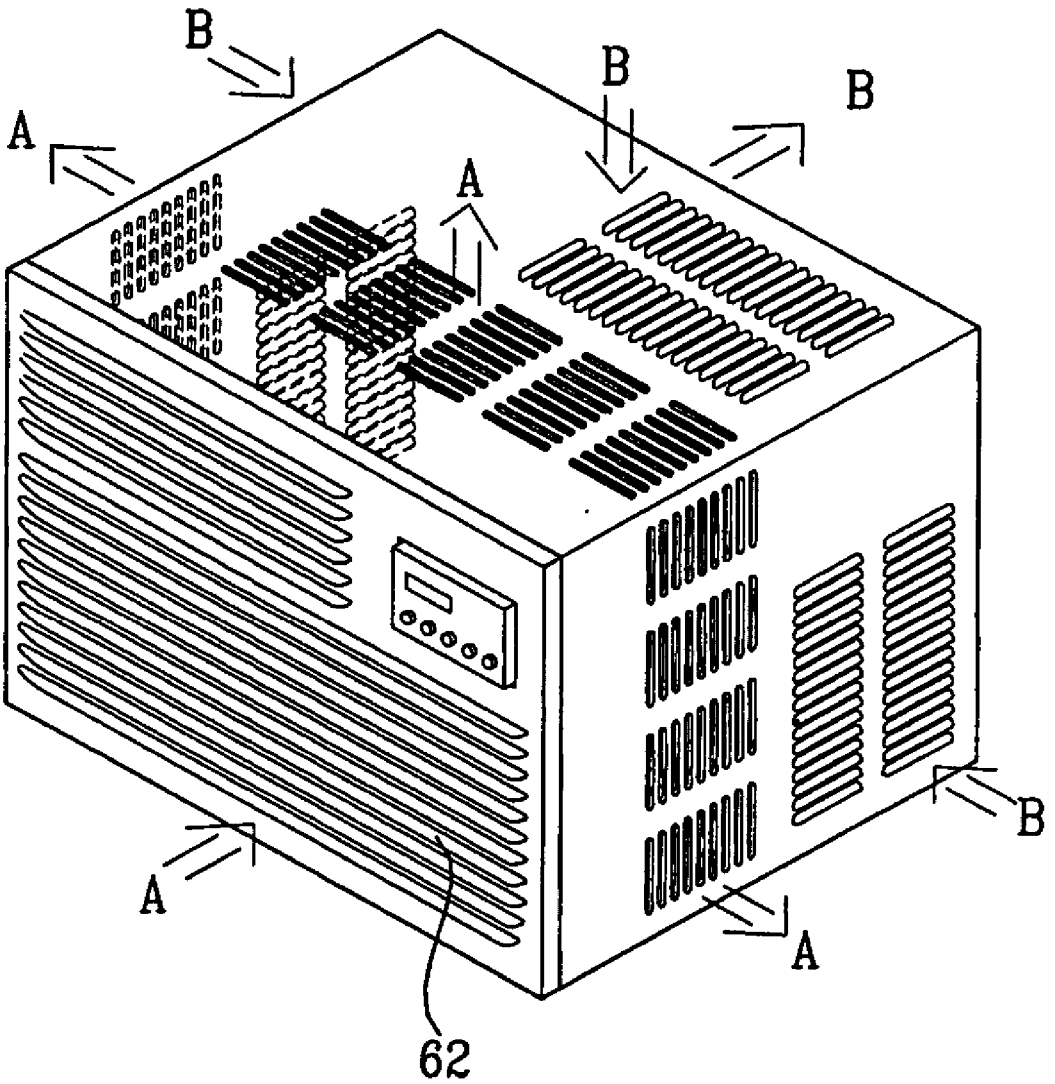

FIG. 4

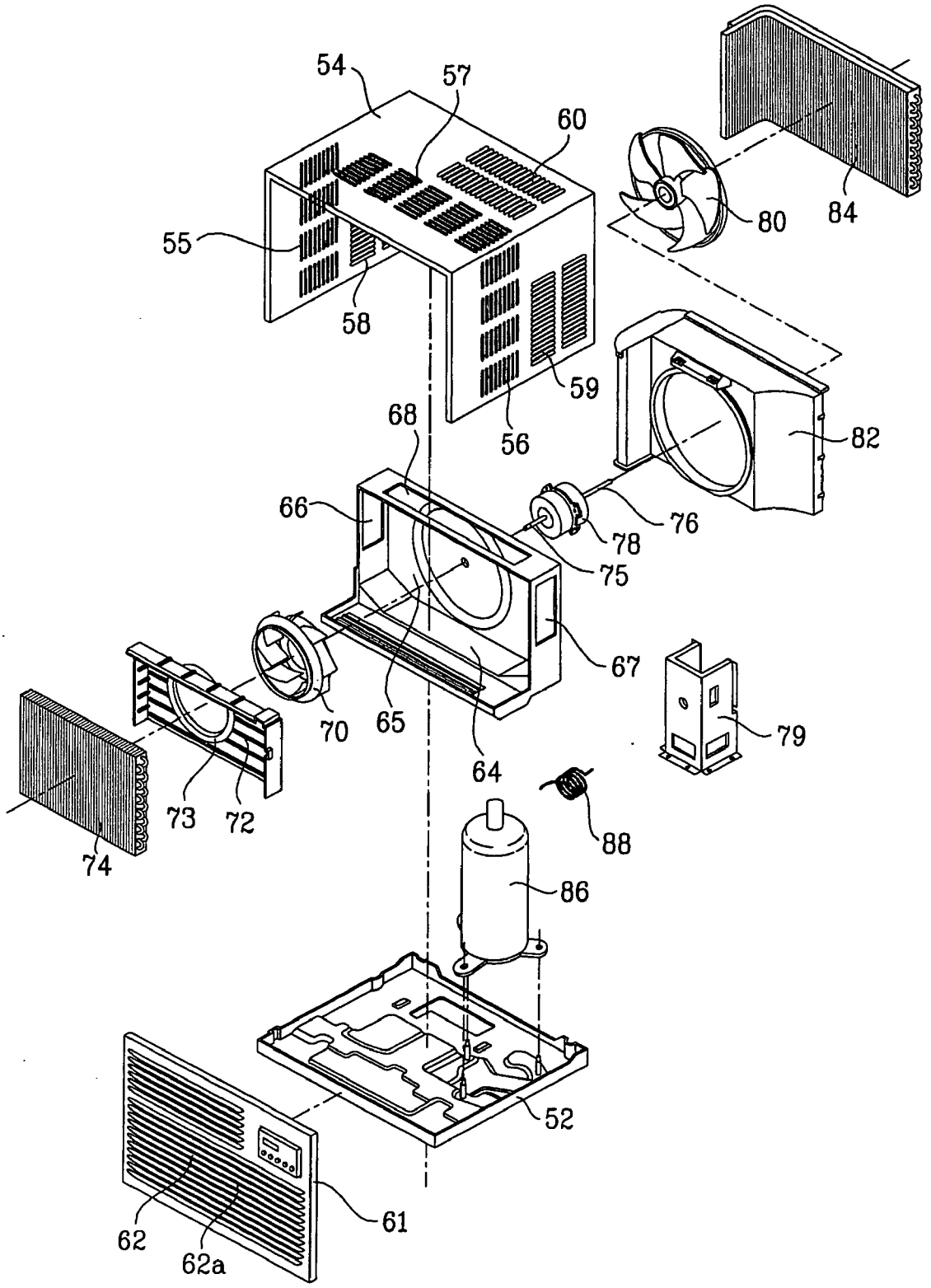
54
57
60
55
58
59
56
80
84
82
68
66
76
78
75
67
70
65
64
79
73
72
74
88
86
52
62
62a
61

FIG. 5

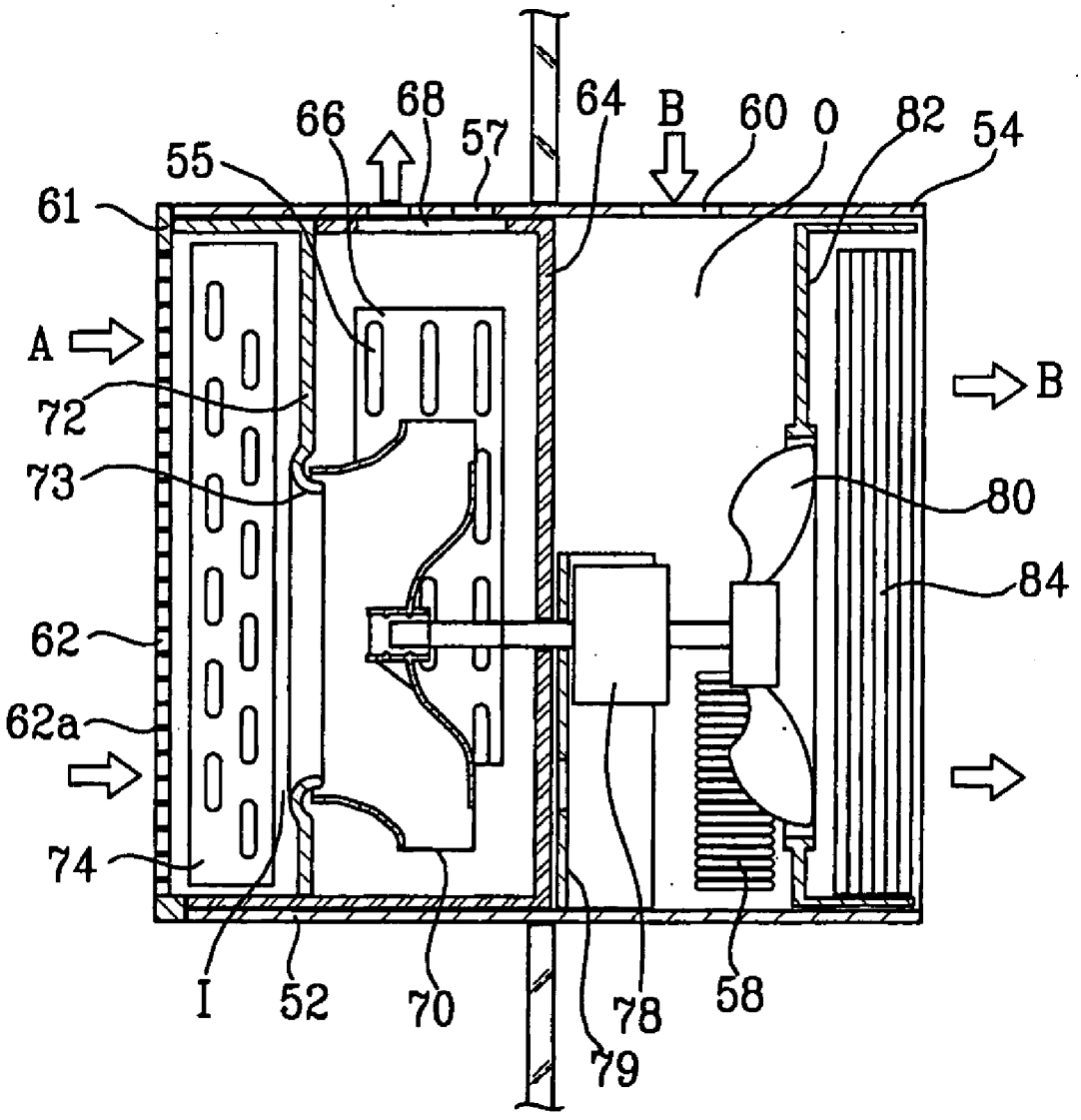

FIG. 6

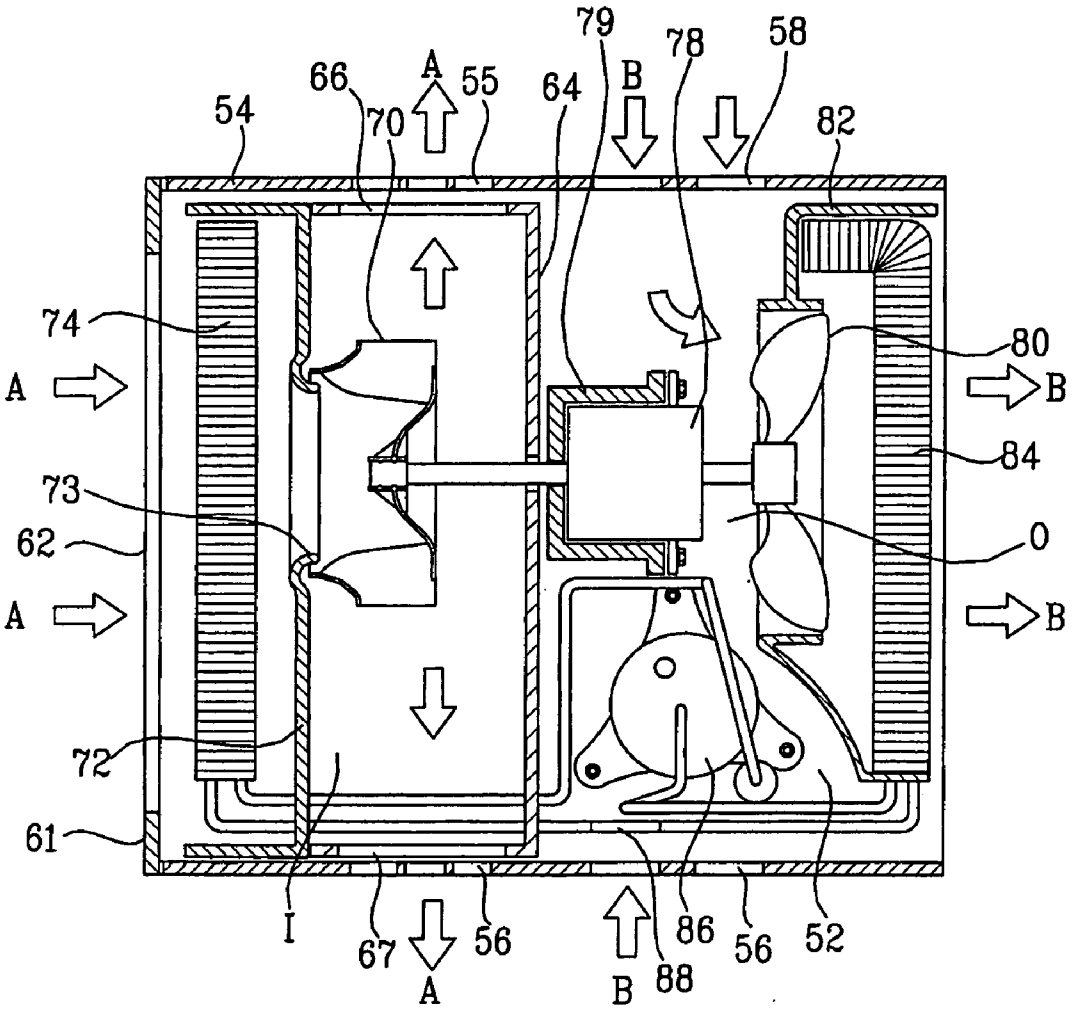
79
78
58
66
A
55
64
B
54
70
82
74
80
A
B
84
73
62
0
A
B
72
61
I
67
56
86
56
52
A
B
88

FIG. 7

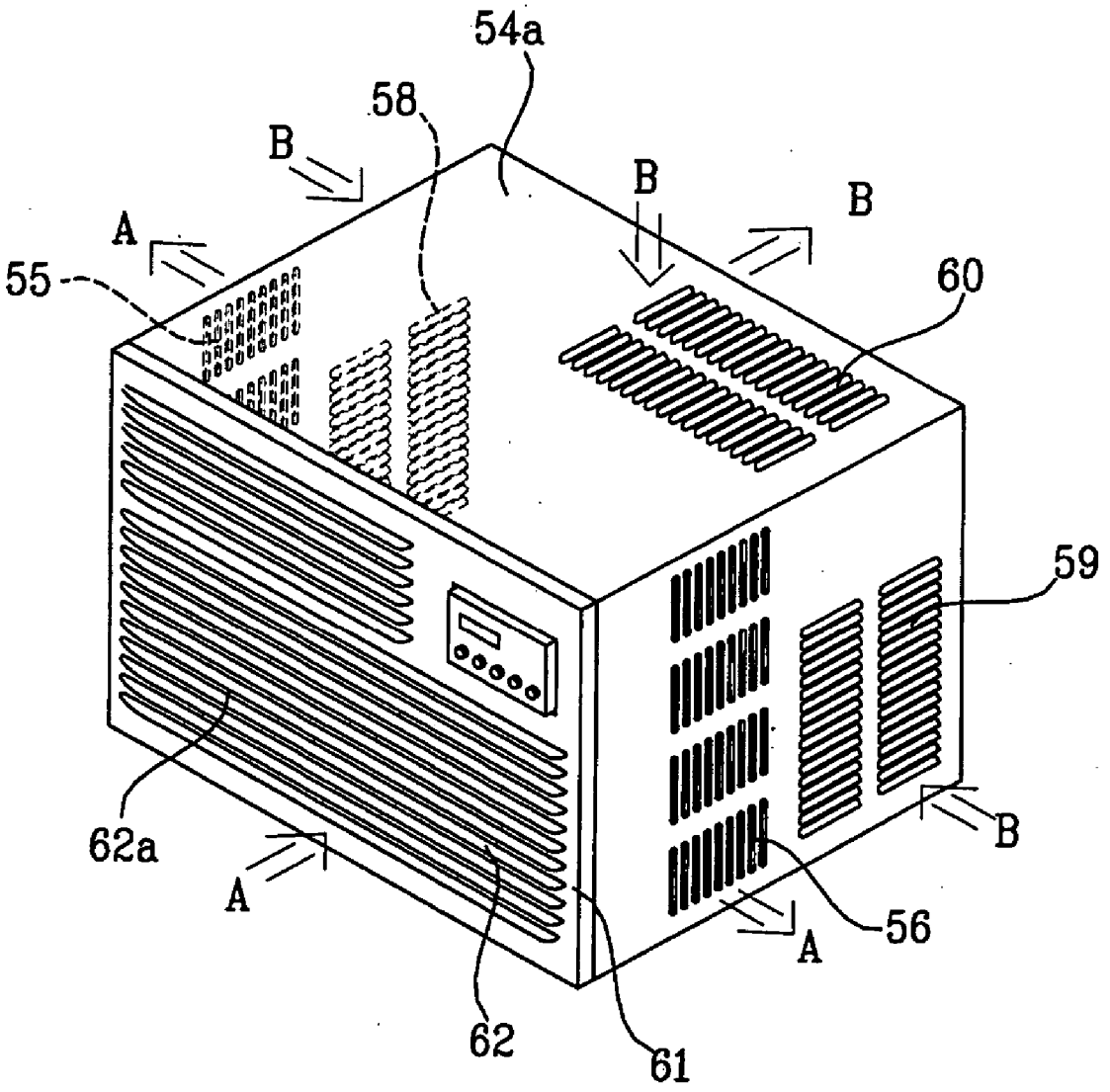

FIG. 8

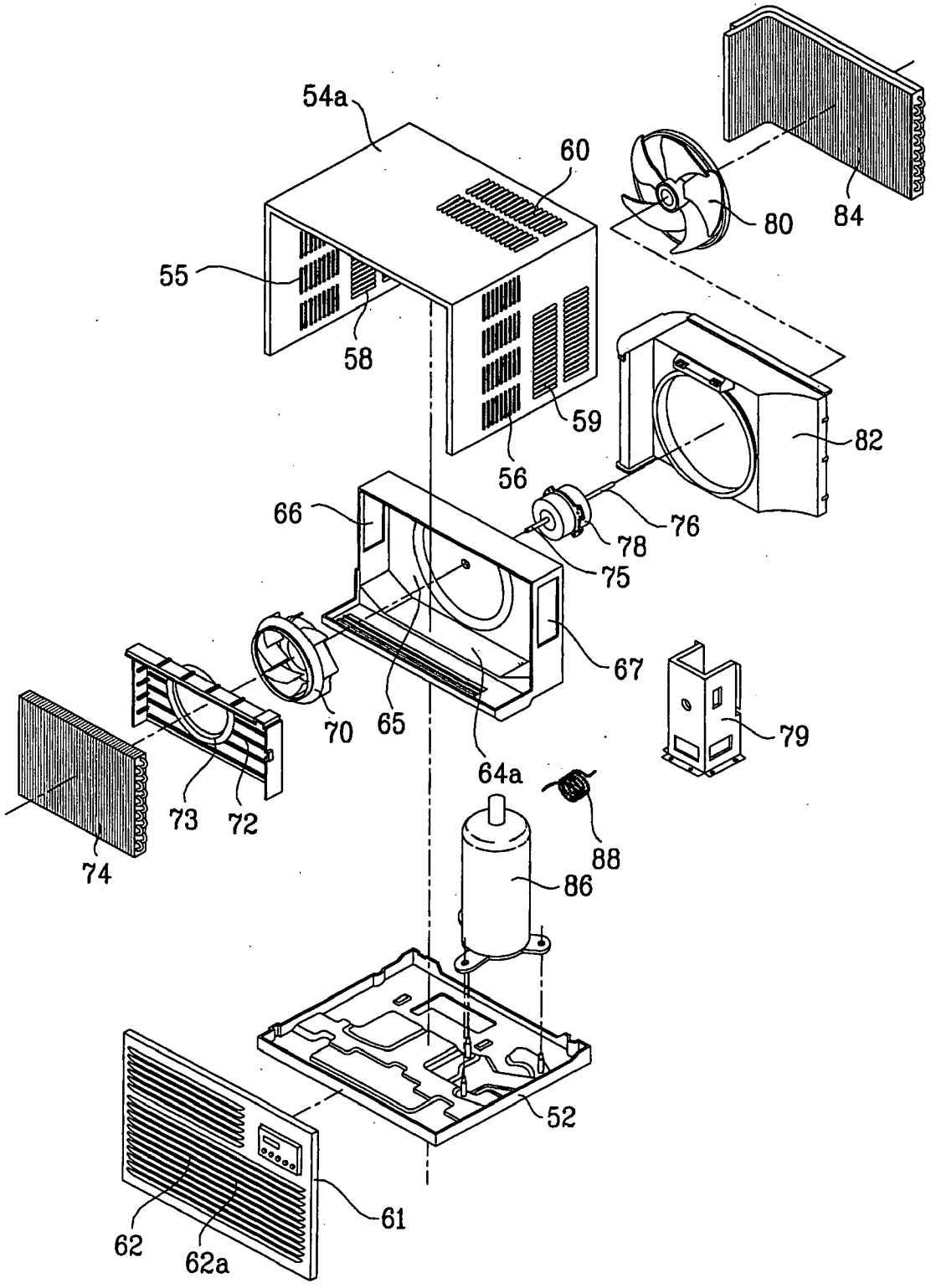
54a
60
55
58
59
56
80
84
82
66
76
78
75
67
70
65
64a
79
73
72
74
88
86
52
61
62
62a

FIG. 9

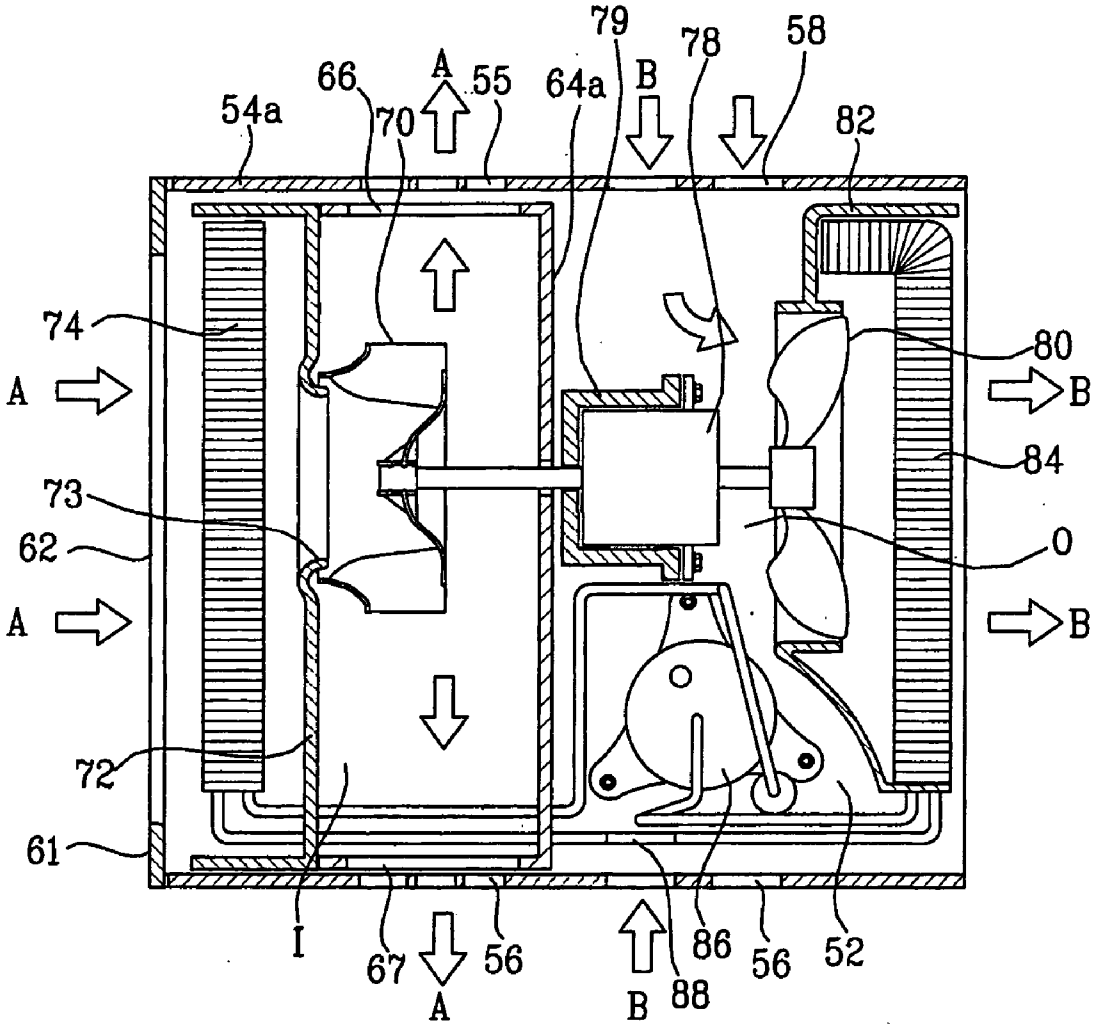
79
78
58
66
A
55
64a
B
54a
70
82
74
80
A
B
84
73
62
0
A
B
72
61
I
67
56
86
56
52
A
B
88

FIG. 10

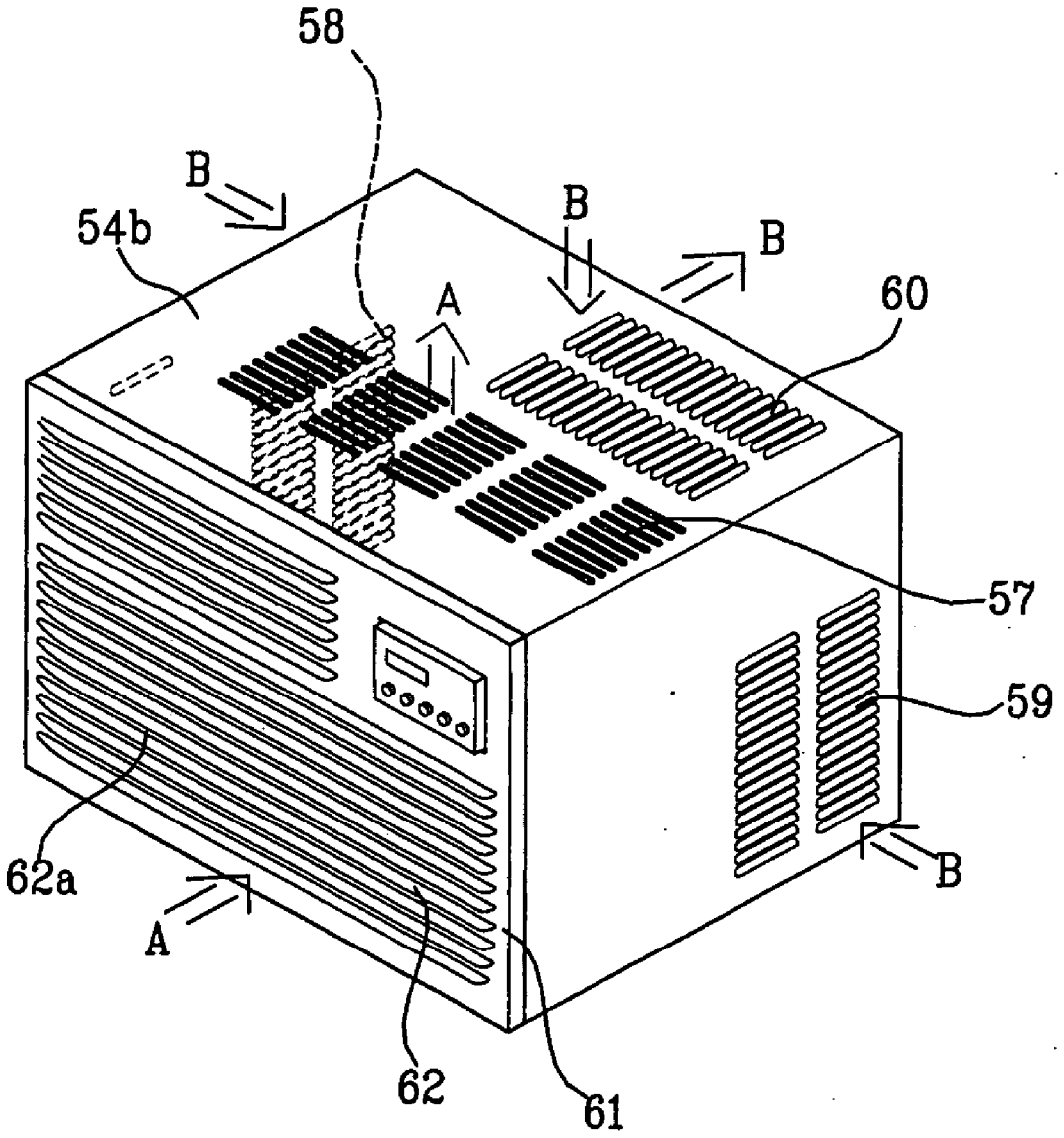

FIG. 11

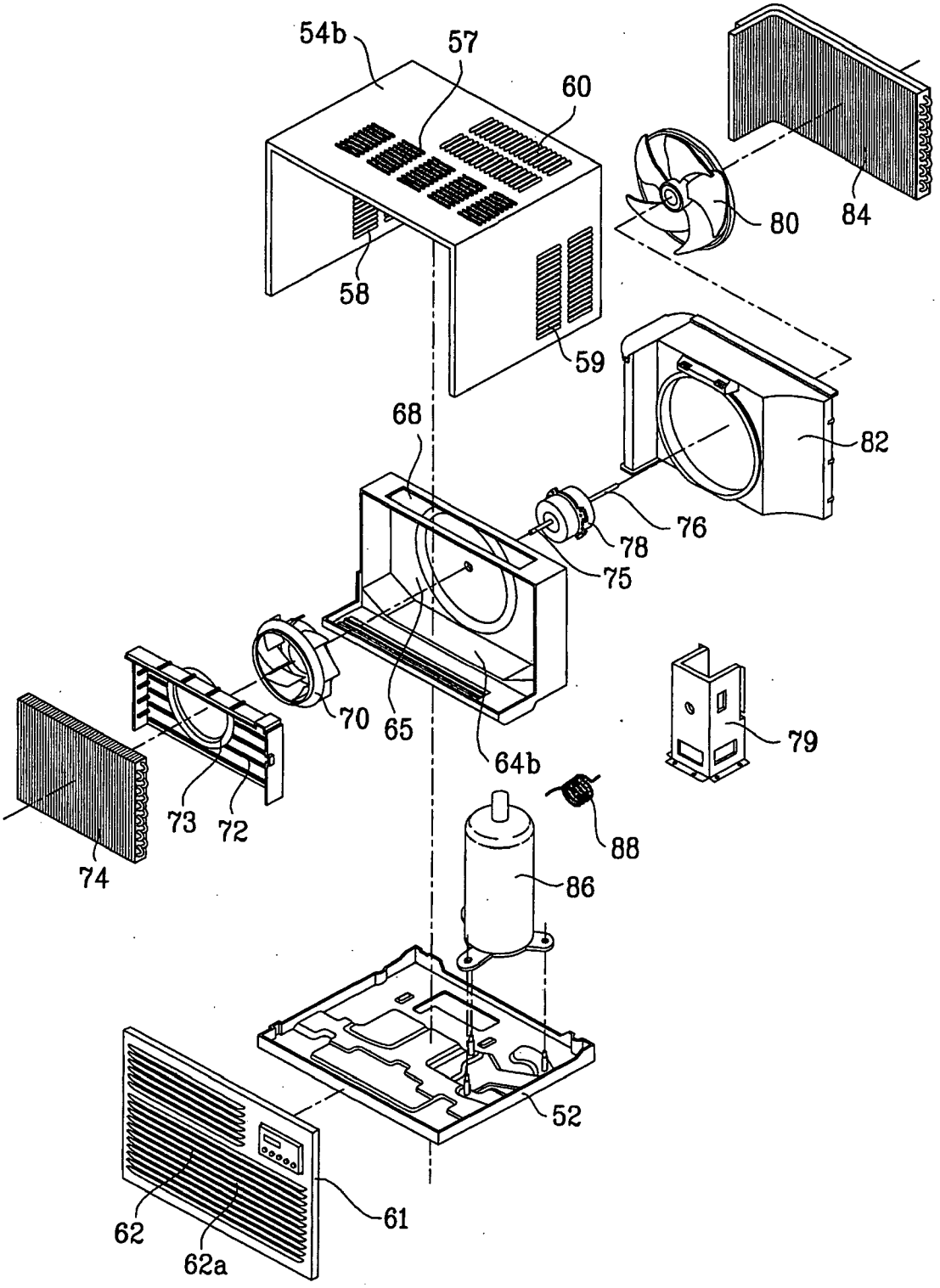
54b
57
60
58
59
80
84
82
68
76
78
75
70
65
64b
79
73
72
74
88
86
52
61
62
62a

FIG. 12

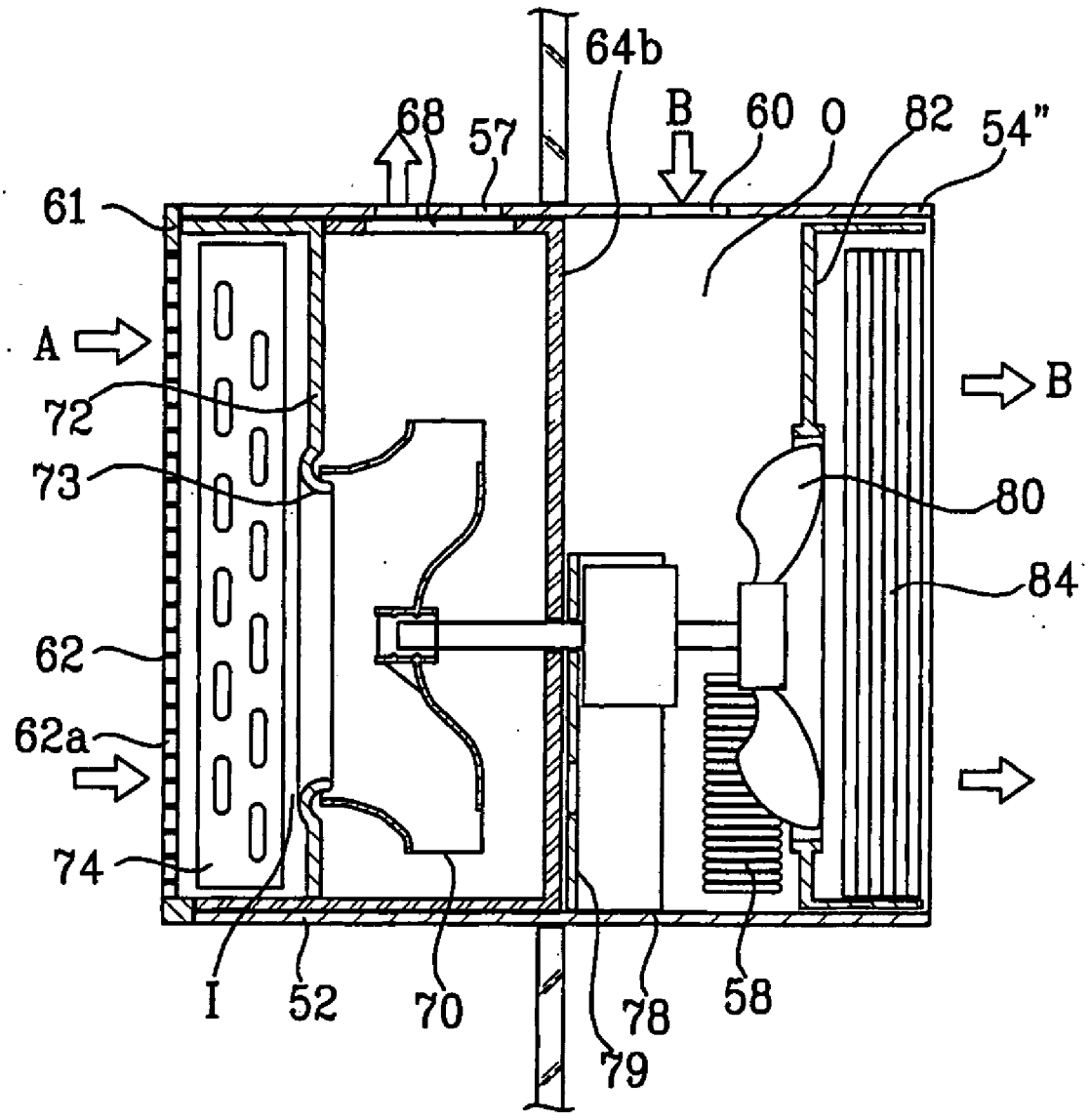

AIR-CONDITIONING SYSTEM

[0001] This application claims the benefit of Korean Application No. 10-2004-0054083, filed on Jul. 12, 2004, which is hereby incorporated by reference as if fully set forth herein.

BACKGROUND OF THE INVENTION

[0002] 1. Field of the Invention

[0003] The present invention relates to an air-conditioning system, and more particularly, to an air-conditioning system in which an indoor unit and an outdoor unit are provided in a single body.

[0004] 2. Discussion of the Related Art

[0005] Generally, an air-conditioning system is equipped with a compressor and a heat exchanger to cool or heat indoor places such as living places, restaurants, libraries, or offices by flowing a refrigerant therein. The air-conditioning system is generally divided into a separate air-conditioning system and an integral air-conditioning system.

[0006] The separate air-conditioning system includes an indoor unit provided with a heat exchanger that carries out room cooling or room heating, an outdoor unit provided with a heat exchanger that performs heat exchange with the outdoor air, and a refrigerant pipe that connects the indoor unit with the outdoor unit.

[0007] In the separate air-conditioning system, the indoor unit and the outdoor unit are separately provided so that the indoor unit is provided at the indoor and the outdoor unit is provided at the outdoor.

[0008] The integral air-conditioning system includes an outdoor unit and an indoor unit formed in a single body without being separated from each other. The outdoor unit and the indoor unit are directly provided in a house in a state that they are built in a wall or hung on a window.

[0009] A related art air-conditioning system will be described with reference to **FIG. 1** and **FIG. 2**.

[0010] The air-conditioning system shown in **FIG. 1** and **FIG. 2** is an integral type in which an indoor unit that performs heat exchange with the indoor air and an outdoor unit that performs heat exchange with the outdoor air are formed in a single body with each other.

[0011] Referring to **FIG. 1** and **FIG. 2**, the air-conditioning system includes a base panel **2** constituting appearance, a frame **4** provided at the upper portion of the base panel **2**, an air guide **6** partitioning the base panel **2** and the frame **4** into an indoor chamber I and an outdoor chamber O, a front panel **9** arranged on the front surface of the indoor chamber of the frame **4** to constitute the front portion of the air-conditioning system, and a compressor **12** varying a gaseous refrigerant of low temperature and low pressure to one of high temperature and high pressure.

[0012] The outdoor chamber O is provided with a condenser **14** and an expansion valve (not shown). The condenser **14** discharges heat using the air flowing inside the outdoor chamber, and the expansion valve expands the refrigerant condensed by the condenser **14**.

[0013] The indoor chamber I is provided with an evaporator **16** that evaporates the refrigerant expanded by the expansion valve in a gas state while absorbing heat of the air flowing inside the indoor chamber.

[0014] Meanwhile, an outdoor inlet **5** is provided at a side and an upper surface of the outdoor chamber, and a rear surface of the outdoor chamber is opened to discharge the air to the outdoor.

[0015] An indoor air inlet **10** is formed at the front surface of the lower portion of the front panel **9**, and an indoor air outlet **11** is formed at the front surface of the upper chamber of the front panel **9** to discharge the air into the indoor.

[0016] The air guide **6** includes a vertical guide **7** vertically arranged on the upper surface of the base panel **2** and a horizontal guide **8** horizontally arranged at the upper portion of the vertical guide **7** to guide the air forcibly flown by an indoor fan **24** to the indoor air outlet **11**.

[0017] The air guide **6** further includes a biaxial motor **22** of which a front shaft **20***a* and a rear shaft **20***b* are respectively extended to the indoor chamber and the outdoor chamber. The front shaft **20***a* is connected with the indoor fan **24** that forcibly circulates the indoor air toward the evaporator **16**. An orifice **26** is provided at the inlet side of the indoor fan **24** to accelerate wind velocity of the flowing air.

[0018] The rear shaft **20***b* is connected with a propeller fan **28** that forcibly circulates the outdoor air toward the condenser **14**. A shroud **30** is provided at the rear of the propeller fan **28** to form an air path.

[0019] The operation of the aforementioned related art air-conditioning system will now be described.

[0020] First, if the air-conditioning system starts to work, the compressor **12** is driven to circulate the refrigerant toward the condenser **14**, an expansion mechanism (not shown), and the evaporator **16**. The biaxial motor **20** is driven to rotate the indoor fan **24** and the propeller fan **28** so that the indoor air and the outdoor air can respectively be sucked into the indoor chamber and the outdoor chamber.

[0021] In more detail, the indoor air at the front of the front panel **9** passes through the indoor air inlet **10** as the indoor fan **24** rotates, and is cooled through the evaporator **16**.

[0022] The air cooled by the evaporator **16** flows toward the indoor air outlet **11** along the orifice **26**, the vertical guide **7**, and the horizontal guide **8** and then is discharged to the front of the front panel **9** through the indoor air outlet **11**.

[0023] Meanwhile, the outdoor air is sucked into the outdoor inlet **5** by rotation of the propeller fan **28** and flows into the condenser **14** after passing through the shroud **30**. Afterwards, the outdoor air absorbs heat of the refrigerant flowing inside the condenser **14** and then is discharged to the outdoor.

[0024] However, the related art air-conditioning system has several problems.

[0025] First, since the indoor air inlet and the indoor air outlet are respectively formed at the upper and lower portions of the front panel, the air may be sucked into the indoor air inlet again after being discharged to the indoor.

[0026] Further, after the indoor air flows into the indoor chamber through the indoor air inlet formed at the lower portion of the front panel and is exchanged with heat there,

it is supplied to the indoor through the indoor air outlet formed at the upper portion of the front panel. Therefore, flow of the air flowing inside the indoor chamber is rapidly varied to cause air flow loss and high noise.

SUMMARY OF THE INVENTION

[0027] Accordingly, the present invention is directed to an air-conditioning system that substantially obviates one or more problems due to limitations and disadvantages of the related art.

[0028] An object of the present invention is to provide an air-conditioning system having an improved performance.

[0029] Additional advantages, objects, and features of the invention will be set forth in part in the description which follows and in part will become apparent to those having ordinary skill in the art upon examination of the following or may be learned from practice of the invention. The objectives and other advantages of the invention may be realized and attained by the structure particularly pointed out in the written description and claims hereof as well as the appended drawings.

[0030] To achieve these objects and other advantages and in accordance with the purpose of the invention, as embodied and broadly described herein, an air-conditioning system according to the present invention includes a cabinet sucking the indoor air from the front and discharging the conditioned air to the side, an indoor fan received in the cabinet, and at least one indoor heat exchanger provided at one side of the indoor fan in the cabinet to perform heat exchange with the air flowing inside the cabinet.

[0031] The cabinet includes an indoor chamber that performs heat exchange with the indoor air, and an outdoor chamber provided at the rear of the indoor chamber to perform heat exchange with the outdoor air.

[0032] The cabinet includes at least one or more indoor air outlets formed at at least one or more sides of the cabinet to discharge the air cooled or heated by the indoor heat exchanger to the indoor, and an indoor air inlet formed in a front panel constituting the front surface of the cabinet to suck the indoor air.

[0033] The indoor air outlets are respectively formed on left and right sides and an upper side of the cabinet.

[0034] The air-conditioning system further includes an air guide provided inside the cabinet to communicate with the indoor air inlet and the indoor air outlets, the air flowing at the front of the air guide and being discharged to the side of the air guide.

[0035] The air guide includes at least one or more exhaust holes formed at at least one or more sides of the air guide to correspond to the at least one or more indoor air outlets.

[0036] The air-conditioning system further includes an orifice provided on the front surface of the air guide, having a path formed toward the front panel.

[0037] The path is gradually reduced toward the rear.

[0038] The indoor fan includes a centrifugal fan provided inside the air guide.

[0039] More preferably, the indoor fan includes a centrifugal turbo fan provided inside the air guide.

[0040] Preferably, the indoor air inlet includes a suction grill provided with a plurality of air vents.

[0041] The air-conditioning system further includes an air guide provided inside the cabinet to partition the indoor chamber and the outdoor chamber, guiding air flow inside the indoor chamber.

[0042] The outdoor chamber includes an outdoor heat exchanger that performs heat exchange with the outdoor air, and an outdoor fan that sucks the outdoor air into the outdoor chamber and discharges the air to the outdoor.

[0043] Preferably, the indoor fan and the outdoor fan are driven by a biaxial motor.

[0044] The cabinet substantially has a square box shape as it is provided with the indoor air outlets at left and right sides, respectively.

[0045] The cabinet substantially has a square box shape as it is provided with the indoor air outlet at the upper side.

[0046] The indoor heat exchanger is provided between the front surface of the cabinet and the indoor fan.

[0047] It is to be understood that both the foregoing general description and the following detailed description of the present invention are exemplary and explanatory and are intended to provide further explanation of the invention as claimed.

BRIEF DESCRIPTION OF THE DRAWINGS

[0048] The accompanying drawings, which are included to provide a further understanding of the invention and are incorporated in and constitute a part of this application, illustrate embodiment(s) of the invention and together with the description serve to explain the principle of the invention. In the drawings:

[0049] **FIG. 1** is a perspective view illustrating a related art air-conditioning system;

[0050] **FIG. 2** is a longitudinal-sectional view illustrating a related art air-conditioning system;

[0051] **FIG. 3** is a perspective view illustrating an air-conditioning system according to the first embodiment of the present invention;

[0052] **FIG. 4** is an exploded perspective view illustrating the air-conditioning system shown in **FIG. 3**;

[0053] **FIG. 5** is a cross-sectional view illustrating the air-conditioning system shown in **FIG. 3**;

[0054] **FIG. 6** is a longitudinal-sectional view illustrating the air-conditioning system shown in **FIG. 3**;

[0055] **FIG. 7** is a perspective view illustrating an air-conditioning system according to the second embodiment of the present invention;

[0056] **FIG. 8** is an exploded perspective view illustrating the air-conditioning system shown in **FIG. 7**;

[0057] **FIG. 9** is a cross-sectional view illustrating the air-conditioning system shown in **FIG. 7**;

[0058] **FIG. 10** is a perspective view illustrating an air-conditioning system according to the third embodiment of the present invention;

[0059] **FIG. 11** is an exploded perspective view illustrating the air-conditioning system shown in **FIG. 10**; and

[0060] **FIG. 12** is a longitudinal-sectional view illustrating the air-conditioning system shown in **FIG. 10**.

DETAILED DESCRIPTION OF THE INVENTION

[0061] Reference will now be made in detail to the preferred embodiments of the present invention, examples of which are illustrated in the accompanying drawings. Wherever possible, the same reference numbers will be used throughout the drawings to refer to the same or like parts.

[0062] Referring to **FIG. 3** to **FIG. 6**, an air-conditioning system according to the first embodiment of the present invention includes a cabinet provided with various elements required to cool and heat the indoor.

[0063] In the first embodiment of the present invention, the cabinet is partitioned into an indoor chamber I and an outdoor chamber O. The indoor chamber I performs heat exchange with the indoor air while the outdoor chamber O performs heat exchange with the outdoor air.

[0064] The outdoor chamber O is provided at the rear of the indoor chamber I so that its outer wall is exposed to the outdoor.

[0065] In the present invention, the indoor air A is sucked at the front of the cabinet, and the conditioned air in the indoor chamber I is discharged to the side of the cabinet.

[0066] To this end, at least one air outlet is formed at least one of sides of the cabinet.

[0067] The outdoor air B is sucked at the side of the cabinet and exchanged with heat in the outdoor chamber O. The outdoor air B is then discharged to the rear of the cabinet.

[0068] Preferably, the cabinet has an opened rear surface or an opening is formed at the rear surface of the cabinet to substantially form a square box shape. However, the rear surface of the cabinet is not limited to the above case.

[0069] In the first embodiment, the cabinet includes a base panel **52** constituting the bottom of the cabinet, an upper frame **54** provided above the base panel **52**, and a front panel **61** constituting the front surface of the cabinet.

[0070] The upper frame **54** constitutes left and right sides and an upper surface of the cabinet. The front panel **61** is provided with an indoor air inlet **62** that sucks the indoor air.

[0071] Preferably, the indoor air inlet **62** includes a suction grill provided with a plurality of air vents **62***a*.

[0072] The base panel **52**, the upper frame **54**, and the front panel **61** may be formed in a single body. More preferably, they are separately manufactured and then assembled into one another in a single body so that their inner elements may readily be repaired or cleaned, in the same manner as the first embodiment.

[0073] In the first embodiment, indoor air outlets **55**, **56** and **57** are respectively formed at the cabinet, more particularly, at left, right, and upper sides of the upper frame **54**, so the indoor air is sucked from the side of the upper frame **54**.

[0074] The indoor air outlet formed at the left side of the upper frame **54** is referred to as "left indoor air outlet **55**", the indoor air outlet formed at the right side of the upper frame **54** is referred to as "right indoor air outlet **56**", and the indoor air outlet formed at the upper side of the upper frame **54** is referred to as "upper indoor air outlet **57**."

[0075] The indoor air outlets **55**, **56**, and **57** are formed at the front of the upper frame **54** constituting the outer wall of the indoor chamber I.

[0076] Preferably, each of the indoor air outlets **55**, **56**, and **57** includes a discharge grill provided with a plurality of air vents.

[0077] Meanwhile, an outdoor air inlet is formed at least one of the left, right and upper sides of the upper frame **54**.

[0078] In the first embodiment, at least one or more outdoor air inlets **58**, **59** and **60** are formed at the rear of the upper frame **54** to suck the outdoor air into the outdoor chamber O.

[0079] In more detail, the outdoor air inlets **58**, **59** and **60** are respectively formed at left, right and upper sides of the rear of the upper frame **54**, and the air inside the outdoor chamber is discharged to the outdoor through the rear surface of the upper frame **54**.

[0080] For convenience of description, the outdoor air inlet formed at the left side of the upper frame **54** is referred to as "left outdoor air inlet **58**", the outdoor air inlet formed at the right side of the upper frame **54** is referred to as "right outdoor air inlet **59**", and the outdoor air inlet formed at the upper side of the upper frame **54** is referred to as "upper outdoor air inlet **60**."

[0081] Therefore, the outdoor air is sucked through the three sides of the upper frame **54** and discharged to the rear through the rear surface of the cabinet.

[0082] An indoor fan **70** and an indoor heat exchanger **74** are provided inside the cabinet, more particularly inside the indoor chamber I, while an outdoor heat exchanger **84** and an outdoor fan **80** are provided in the outdoor chamber O.

[0083] The indoor heat exchanger **74** is provided at one side of the indoor fan **70**, more preferably between the indoor fan **70** and the front panel **61** to perform heat exchange with the air flowing from the indoor air inlet **62** to the indoor air outlets **55**, **56** and **57**.

[0084] The outdoor fan **80** is designed to suck the air into the outdoor chamber O to discharge the air to the outdoor. The outdoor fan **80** sucks the air along its circumference to discharge the air to the rear, i.e., the shaft direction. An axle fan that sucks the air from the front and ventilates the air to the rear may be used as the outdoor fan **80**.

[0085] Furthermore, the outdoor heat exchanger **84** is provided at one side of the outdoor fan **80**, more preferably at the rear of the outdoor fan **80** to perform heat exchange with the outdoor air sucked into the outdoor chamber O through the outdoor air inlets **58**, **59** and **60**.

[0086] In addition, the cabinet further includes an air guide **64** that communicates with the indoor air inlet **62** and the indoor air outlets **55**, **56** and **57**.

[0087] In more detail, the air guide **64** guides the air flowing inside the indoor chamber I.

[0088] The air flowing into the indoor chamber I through the indoor air inlet **62** flows from the front of the air guide **64** to the inner side of the air guide **64** and then is discharged to the side of the air guide **64**.

[0089] To this end, at least one exhaust hole is formed at at least one of the sides of the air guide **64**.

[0090] Preferably, the exhaust hole is formed to correspond to the indoor air outlets. Therefore, exhaust holes **66**, **67** and **68** are formed at left, right and upper sides of the air guide **64** to correspond to the indoor air outlets **55**, **56** and **57**.

[0091] Preferably, the exhaust holes **66**, **67** and **68** face the indoor air outlets **55**, **56** and **57**.

[0092] The front surface of the air guide is fully opened in the same manner as the first embodiment. Alternatively, the front surface of the air guide may be provided with an air vent having a predetermined size.

[0093] The air guide **64** constructed as above is preferably designed to partition the indoor chamber I and the outdoor chamber O.

[0094] To this end, the air guide **64** is provided at the upper side of the base panel **52**.

[0095] The indoor fan **70** is formed inside the air guide **64**.

[0096] In more detail, the indoor fan **70** includes a centrifugal fan, more preferably a centrifugal turbo fan of a high static pressure, which sucks the air along the shaft direction and ventilates the air to its circumference.

[0097] Preferably, the indoor fan **70** and the outdoor fan **80** are driven by a biaxial motor **78**.

[0098] The biaxial motor **78** includes a front rotational shaft **75** and a rear rotational shaft **76**. The front rotational shaft **75** is extended to the front toward the front panel **61** and connected with the indoor fan **70** while the rear rotational shaft **76** is extended toward the rear surface of the cabinet and connected with the outdoor fan **80**.

[0099] Therefore, the indoor fan **70** and the outdoor fan **80** respectively connected with the front rotational shaft **75** and the rear rotational shaft **76** have shaft directions respectively formed in front and rear directions.

[0100] The biaxial motor **78** may be provided on either the rear surface of the air guide **64** or a motor mounter **79** provided in the outdoor chamber O.

[0101] Meanwhile, the outdoor chamber O is provided with a shroud **82** that constitutes a path of the outdoor air flown by the outdoor fan **80**.

[0102] The outdoor heat exchanger **84** is provided at the inner side or the rear of the shroud **82** to heat or cool the air ventilated to the rear by the outdoor fan **80**.

[0103] A reference numeral **86** that is not described denotes a compressor provided in the base panel **52** so that it may be positioned inside the outdoor chamber O.

[0104] A reference numeral **88** denotes a capillary tube provided between the outdoor heat exchanger **84** and the indoor heat exchanger to expand the condensed refrigerant.

[0105] The operation of the aforementioned air-conditioning system according to the first embodiment of the present invention will now be described.

[0106] The air-conditioning system can be operated along a circulating direction of the refrigerant in a cooling mode or a heating mode. Hereinafter, the operation of the air-conditioning system based on a cooling mode will be described.

[0107] First, if the air-conditioning system works, the compressor **86** is driven to discharge the refrigerant at high temperature and high pressure. The refrigerant discharged at high temperature and high pressure is condensed while emitting heat to the outdoor air flowing through the outdoor heat exchanger **84**.

[0108] The refrigerant condensed by the outer heat exchanger **84** is expanded through the capillary tube **88**, and is evaporated by absorbing heat of the indoor air flowing through the indoor heat exchanger **74**. Then, the refrigerant flows into the compressor **86**. In this way, the operation of the refrigerant is repeated.

[0109] If the biaxial motor **78** is driven, the indoor fan **70** is driven so that the indoor air A at the front of the front panel **61** is sucked into the indoor chamber I through the indoor air inlet **62**.

[0110] The indoor air A sucked into the indoor chamber I is cooled by the indoor heat exchanger **74**. Then, the indoor air A is sucked into the air guide **64** through a path **73** of an orifice **72**.

[0111] Next, the air cooled by the indoor chamber I is scattered in three directions through the exhaust holes **66**, **67** and **68** of the air guide **64**. Then, the air is discharged to three indoor directions through the left indoor air outlet **55**, the right indoor air outlet **56** and the upper indoor air outlet **57**.

[0112] Meanwhile, the outdoor air sucked from both sides and the upper side of the upper frame **54** to the inner portion of the outdoor chamber I by driving of the outdoor fan **80** connected with the biaxial motor **78** is ventilated to the rear toward the outdoor heat exchanger **84**. Then, the outdoor air is heated by absorbing heat of the refrigerant flowing inside the outdoor heat exchanger **84**.

[0113] The air heated by the outdoor heat exchanger **84** is discharged to the rear through the rear surface of the cabinet.

[0114] Next, the air-conditioning system according to the second embodiment of the present invention will be described with reference to **FIG. 7** to **FIG. 9**.

[0115] The air-conditioning system according to the second embodiment of the present invention includes an upper frame **54***a* that discharges the air to both sides as the indoor air outlet **57** formed at the upper side of the upper frame **54** described in the first embodiment is removed.

[0116] Since the exhaust hole **68** formed at the upper side of the air guide **64** described in the first embodiment is removed, an air guide **64***a* provided with exhaust holes **66** and **67** at left and right sides only is provided inside the cabinet of the air-conditioning system according to the second embodiment of the present invention.

[0117] Therefore, the air-conditioning system according to the second embodiment of the present invention sucks the

air from the front of the cabinet and discharges the conditioned air to both sides of the cabinet.

[0118] Since other elements and their operation are the same as those of the first embodiment, the same reference numbers will be used throughout the drawings to refer to the same or like parts and their repeated description will be omitted.

[0119] Now, the air-conditioning system according to the third embodiment of the present invention will be described with reference to **FIG. 10** to **FIG. 12**.

[0120] The air-conditioning system according to the third embodiment of the present invention includes an upper frame **54***b* that discharges the air to the upper side as the left and right indoor air outlets **55** and **56** formed at both sides of the upper frame **54** described in the first embodiment are removed.

[0121] Since the exhaust holes **66** and **67** formed at both sides of the air guide **64** described in the first embodiment are removed, an air guide **64***b* provided with an exhaust hole **68** at the upper side only is provided inside the cabinet of the air-conditioning system according to the third embodiment of the present invention.

[0122] Therefore, the air-conditioning system according to the third embodiment of the present invention sucks the air from the front of the cabinet and discharges the conditioned air to the upper side of the cabinet.

[0123] Since other elements and their operation are the same as those of the first embodiment, the same reference numbers will be used throughout the drawings to refer to the same or like parts and their repeated description will be omitted.

[0124] The aforementioned air-conditioning system according to the present invention has the following advantages.

[0125] First, since the indoor air discharged from the cabinet is not affected by the indoor air sucked into the cabinet, the cooled or heated air is prevented from being sucked into the cabinet again directly after being discharged from the cabinet, thereby improving air-conditioning performance.

[0126] Second, the indoor air is sucked from the front of the cabinet and the conditioned air is discharged to the side of the cabinet, it is possible to minimize a flow path and flow resistance of the air. This reduces load and power consumption of the fan, and minimizes flow noise.

[0127] Finally, since the conditioned air is discharged to three directions, the indoor chamber can quickly be cooled or heated.

[0128] It will be apparent to those skilled in the art that various modifications and variations can be made in the present invention without departing from the spirit or scope of the inventions. Thus, it is intended that the present invention covers the modifications and variations of this invention provided they come within the scope of the appended claims and their equivalents.

What is claimed is:

1. An air-conditioning system comprising:

a cabinet sucking the indoor air from the front and discharging the conditioned air to the side;

an indoor fan received in the cabinet; and

at least one indoor heat exchanger provided at one side of the indoor fan in the cabinet to perform heat exchange with the air flowing inside the cabinet.

2. The air-conditioning system of claim 1, wherein the cabinet includes an indoor chamber that performs heat exchange with the indoor air, and an outdoor chamber provided at the rear of the indoor chamber to perform heat exchange with the outdoor air.

3. The air-conditioning system of claim 1, wherein the cabinet includes at least one or more indoor air outlets formed at at least one or more sides of the cabinet to discharge the air cooled or heated by the indoor heat exchanger to the indoor, and an indoor air inlet formed in a front panel constituting the front surface of the cabinet to suck the indoor air.

4. The air-conditioning system of claim 3, wherein the indoor air outlets are respectively formed on left and right sides and an upper side of the cabinet.

5. The air-conditioning system of claim 3, further comprising an air guide provided inside the cabinet to communicate with the indoor air inlet and the indoor air outlets, the air flowing at the front of the air guide and being discharged to the side of the air guide.

6. The air-conditioning system of claim 5, wherein the air guide includes at least one or more exhaust holes formed at at least one or more sides of the air guide to correspond to the at least one or more indoor air outlets.

7. The air-conditioning system of claim 6, further comprising an orifice provided on the front surface of the air guide, having a path formed toward the front panel.

8. The air-conditioning system of claim 7, wherein the path is gradually reduced toward the rear.

9. The air-conditioning system of claim 6, wherein the indoor fan includes a centrifugal fan provided inside the air guide.

10. The air-conditioning system of claim 6, wherein the indoor fan includes a centrifugal turbo fan provided inside the air guide.

11. The air-conditioning system of claim 3, wherein the indoor air inlet includes a suction grill provided with a plurality of air vents.

12. The air-conditioning system of claim 2, further comprising an air guide provided inside the cabinet to partition the indoor chamber and the outdoor chamber, guiding air flow inside the indoor chamber.

13. The air-conditioning system of claim 2, wherein the outdoor chamber includes an outdoor heat exchanger that performs heat exchange with the outdoor air, and an outdoor fan that sucks the outdoor air into the outdoor chamber and discharges the air to the outdoor.

14. The air-conditioning system of claim 13, wherein the indoor fan and the outdoor fan are driven by a biaxial motor.

15. The air-conditioning system of claim 1, wherein the cabinet substantially has a square box shape as it is provided with the indoor air outlets at left and right sides, respectively.

16. The air-conditioning system of claim 1, wherein the cabinet substantially has a square box shape as it is provided with the indoor air outlet at the upper side.

17. The air-conditioning system of claim 1, wherein the indoor heat exchanger is provided between the front surface of the cabinet and the indoor fan.

* * * * *