Oct. 24, 1939. F. L. DREYER ET AL 2,177,099

FLUSHING VALVE FOR URINALS, WATER CLOSETS, AND THE LIKE

Filed June 15, 1937

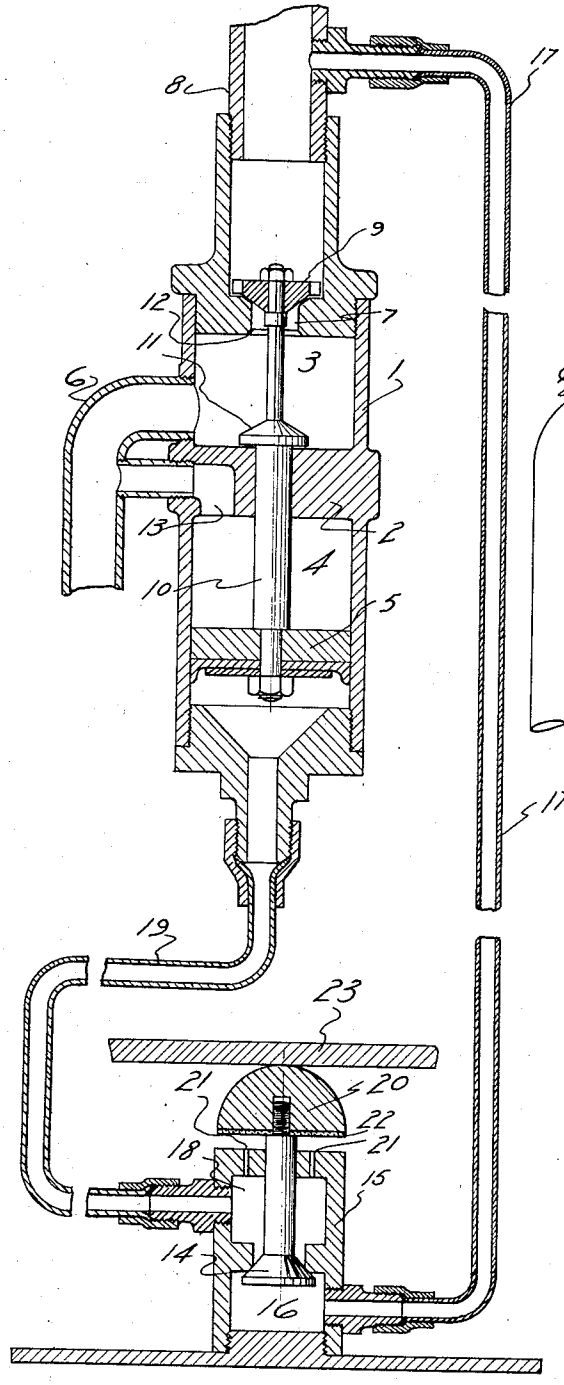

FIG. 1

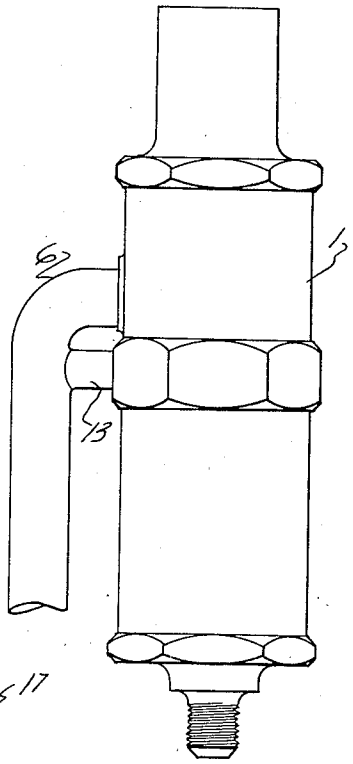

FIG. 2

F. L. Dreyer
C. Bromley
INVENTORS

By: Glascock Downing & Seebold
Attys.

Patented Oct. 24, 1939

2,177,099

UNITED STATES PATENT OFFICE

2,177,099

FLUSHING VALVE FOR URINALS, WATER CLOSETS, AND THE LIKE

Francis Louis Dreyer and Colin Bromley, Pretoria, Transvaal, Union of South Africa; said Bromley assignor to said Dreyer

Application June 15, 1937, Serial No. 148,362
In the Union of South Africa June 22, 1936

3 Claims. (Cl. 137—93)

This invention relates to an improved flushing valve for use in connection with urinals, water closets, and the like, and has for its main object the elimination of the usual elevated cistera and its attendant disadvantages. The improved device is adapted for direct connection to the water supply main irrespective of the pressure therein. Besides possessing this advantage the improved valve is simple and robust in construction and, since it has the minimum number of moving parts, it consequently needs little or no attention over long periods of service.

According to the invention broadly the device comprises a main valve proper directly controlling the flow of water from a pressure main down a flush pipe, which valve is adapted normally to be held in its closed position by the water pressure in said main, manually or foot-operated means for rapidly opening said valve against the hydraulic pressure tending to hold it closed, and means for controlling or retarding the return movement of said valve to its seating so that the time it takes to close determines the time or extent of the flushing operation. More particularly the main valve is connected by a steam or rod to a piston of larger effective area than itself which piston is reciprocable in a cylinder, and the space beneath said piston is hydraulically connected to the pressure main, through a manually or foot-operated flush control valve, in such a manner that, momentary opening of said flush control valve against the pressure in the main to establish direct communication between the pressure main and the underside of the piston, opens the main valve, while the slow escape of the water trapped beneath said piston, through a restricted relief orifice or weephole, retards the return of the valve to its seating, and thus determines the duration of the actual flushing operation.

According to a preferred construction the device comprises a casing divided by a partition wall into two chambers, the upper part of which is directly connected to the flush pipe, and by way of a valve aperture in the top end wall thereof, to the pressure main, while the lower chamber constitutes the cylinder for the reciprocable piston. The main valve forms the closure for said valve aperture and is connected to the piston by a stem or rod extending through a gland aperture in said partition wall between the chambers. Preferably a second oppositely facing valve is provided on the main valve stem or rod and is adapted to close the valve aperture from below, on the piston reaching the top limit of its stroke so that flushing does not commence until the flush control valve has been released and has closed. The flush control valve in the case of a urinal is preferably arranged for foot operation and is located below floor level with the buttoned end of the valve stem projecting above the surface. This valve may be of any suitable type but preferably it is arranged to open downwardly against the pressure in the supply main. It is of the two chamber type, one of which is connected to the supply main by a relatively small bore pipe, while the other is connected in a similar manner to the space beneath the piston. The valve stem passes through the latter chamber and an aperture in the top of the casing, through which it passes, is arranged to constitute the relief orifice or weephole previously referred to. The lower side of the foot operated button preferably forms a valve so that this relief orifice is closed when the button is depressed and thus prevents unnecessary waste of water while the full pressure of the main is momentarily placed in communication with the underside of the piston. It will be obvious that this relief orifice, apart from inconvenience, may be provided adjacent the lower end of the chamber comprising the cylinder or it may be provided in the pipe from the flush control valve leading thereto.

It will be understood that, apart from the pressure in the main supply pipe, the size of the valve aperture and diameter of the flush pipe, the extent of the flushing operation is mainly controlled by the size of the relief orifice. In certain circumstances therefore it may be an advantage to provide adjustable means for varying the effective opening of this orifice to suit varying conditions of pressure or varying flushing requirements.

When the device is employed in connection with urinals the provision of the second oppositely facing valve co-acting to close the main valve aperture from below is essential. In this use of the device the flush control valve is actuated by a hinged tread plate or the like which is depressed to open said valve by the weight of the user standing on it. It will then be obvious that so long as the user's weight remains on the plate no flushing action takes place, this action only commencing after the user has stepped off said tread plate and has moved away.

To enable the invention to be more clearly understood and carried into practice, reference is now made to the accompanying drawing in which like reference numerals denote like parts throughout the several views.

In the drawing—

Fig. 1 is a vertical section of a flushing valve arrangement for a urinal, constructed according to the invention;

Fig. 2 is an elevation of the flushing valve only.

Referring to the drawing reference 1 denotes the valve body or casing divided by the partition wall 2 into an upper chamber 3 and a lower chamber 4 in the form of a cylinder within which the piston 5 is reciprocable. The upper chamber 3 is directly connected to the flush pipe 6 and by way of a valve aperture 7 in the top end wall thereof, communicates with the pressure main 8. The main valve 9 forms the closure for the valve aperture 7 and is connected to the piston 5 by the stem 10 extending slidably through a gland aperture in the partition 2. A second oppositely facing valve 11 is provided on the upper portion of the valve stem 10 and is adapted to co-act with a seating 12 on the underside of the valve aperture 7. To prevent an air lock and to permit rapid movement of the piston 5, the air relief passage 13 is provided, which for convenience and silence is connected to the flush pipe 6.

Operation of the device is effected through the flush control valve 14 located in its casing 15. As shown, the space 16 is in direct communication with the pressure main 8, by way of the pipe 17, while the space 18 is in direct communication with the under side of the piston 5 by way of the pipe 19. The stem of the valve 14 projects through the top end wall of the casing 15 and terminates in a button or knob 20. The small apertures 21 constitute the relief orifices or weepholes and the underside of the button 20 carries a packing 22 whereby said orifices are closed on depression of said button by the hinged tread plate 23.

The drawing illustrates a construction according to the invention which is particularly suitable for a urinal, and the operation thereof will now be described. It will be understood that the control valve assembly and the tread plate 23 are so arranged that a user will depress the said tread plate when making use of the urinal in the usual manner. Such depression opens the valve 14 and closes the relief orifices 21 and permits the full pressure in the main 8 to act against the underside of the piston 5. Due to the substantially larger area of the piston 5 compared with the area of the main valve 9, the piston is caused to move upwards to open this valve. Flushing however is prevented by reason of the second valve 11 closing the valve aperture 7. Accordingly, with the tread plate 23 depressed, no flushing action takes place. As soon as the user steps off the tread plate 23 however, the valve 14 is returned to its seating and the water pressure below the piston 5 is released by way of the relief orifices 21. The pressure in the main on the valve 11 accelerates the initial downward movement of the piston 5 which thereby opens the valve aperture 7 and permits water from the main at full pressure to pass down the flush pipe 6. This flushing action continues until the downward movement of the piston 5 causes the main valve 9 to close the valve aperture 7 when flushing ceases and the device is ready for operation by the next user.

For practical reasons it may be advisable to provide spring means for returning the flushing control valve 14 to its seating to make provision for occasions when the water supply is cut off. Such means may conveniently comprise a light coil spring located beneath the knob 20. For similar reasons, the relief orifices 21 may be dispensed with and a slight clearance between the stem of the valve 14 and the hole in the top end of the casing 15 through which it projects, may be provided to fulfill the same function by permitting leakage.

What I claim is:

1. An improved flushing valve adapted for direct connection to a pressure supply main comprising a casing divided by a cross partition into upper and lower chambers, the upper chamber being connected directly to the flush pipe and through a valve controlled aperture to the pressure supply main, and the lower chamber forming a cylinder for a piston movable therein, means hydraulically connecting the cylinder below the piston to the pressure supply main, a control valve in said connecting means, an air escape passage from the cylinder above the piston to the flush pipe, a relief orifice in connection with the cylinder space below the piston, an externally disposed main valve controlling the aperture of the upper chamber, a rod connecting said piston and main valve, and a second valve on said rod adapted when the piston is in its uppermost position to close the said valve controlled aperture of the upper chamber from within said chamber, after said aperture has been opened by the externally disposed main valve.

2. A flushing valve according to claim 1, wherein the relief orifice is provided in the casing of the control valve and is adapted to be closed when said control valve is opened to permit pressure fluid to pass from the supply main through said casing to the cylinder chamber below the piston.

3. A flushing valve according to claim 1, wherein the air escape passage leading from the space above the piston to the flush pipe is closed by the top side of the piston at the end of its upward travel.

FRANCIS LOUIS DREYER.
COLIN BROMLEY.