April 25, 1950 H. W. MORGAN 2,505,423

MAGNETIC DRINK MIXER

Filed March 5, 1948 2 Sheets-Sheet 1

Fig. 1.

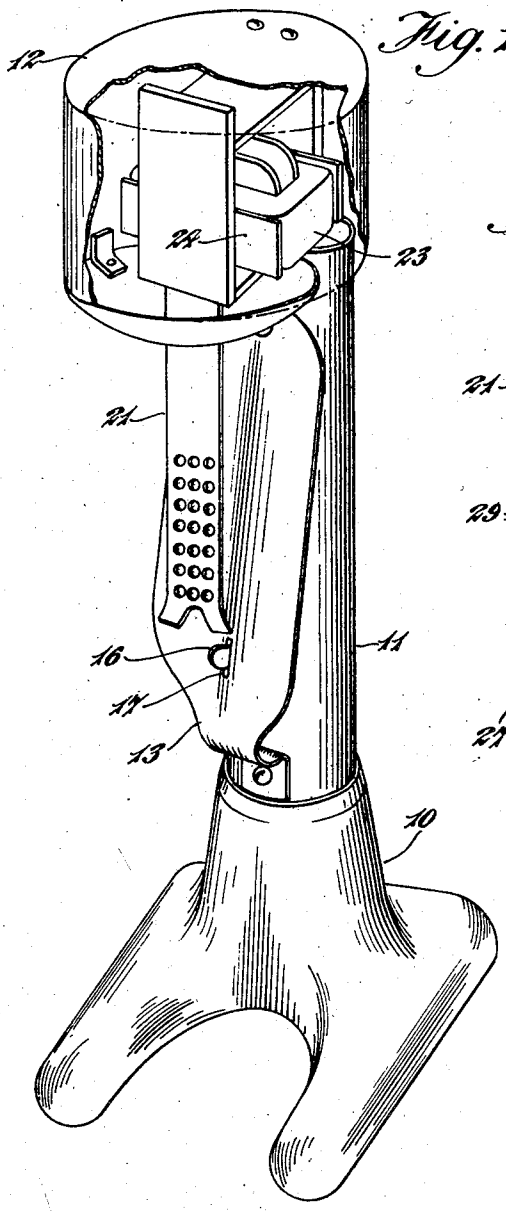

Fig. 3.

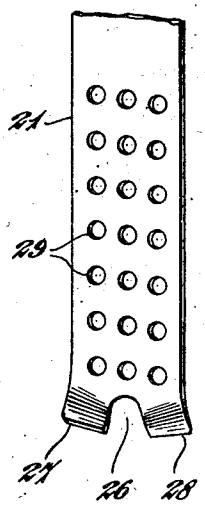

Henry Walter Morgan
INVENTOR
By Richardson and Baird
his ATTYS.

April 25, 1950 H. W. MORGAN 2,505,423

MAGNETIC DRINK MIXER

Filed March 5, 1948 2 Sheets-Sheet 2

Fig. 2.

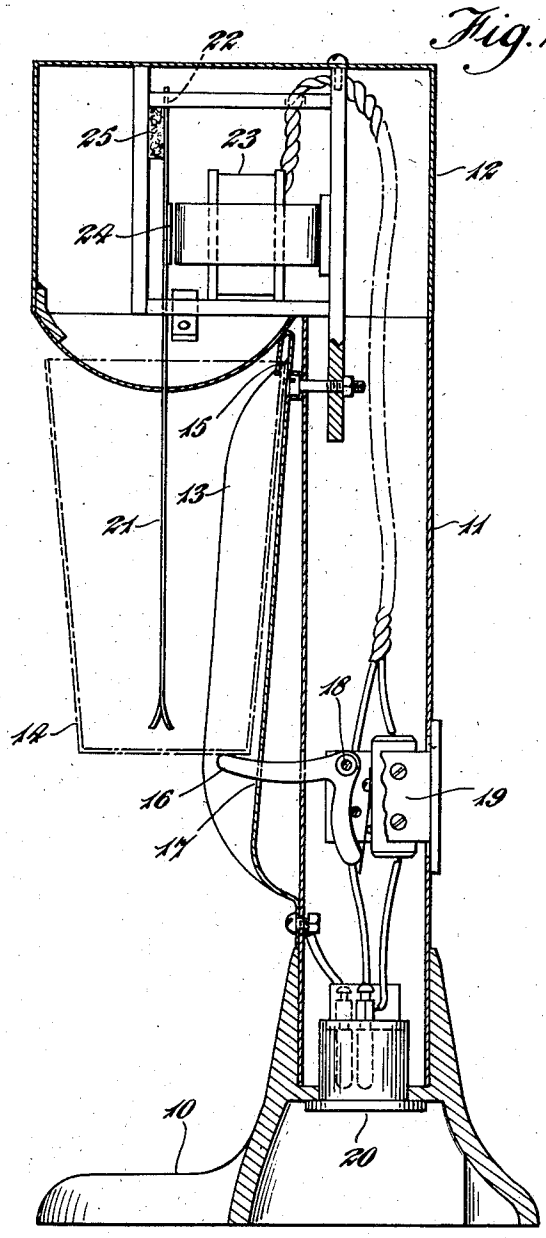

Henry Walter Morgan
INVENTOR
By Richardson and Davis
his ATTYS.

Patented Apr. 25, 1950 2,505,423

UNITED STATES PATENT OFFICE

2,505,423

MAGNETIC DRINK MIXER

Henry Walter Morgan, Islington, London, England

Application March 5, 1948, Serial No. 13,152
In Great Britain January 22, 1948

2 Claims. (Cl. 259—128)

1

This invention relates to mixing apparatus such as are used, for example, for the purpose of producing homogeneous, or substantially homogeneous, mixtures of a powder and a liquid as in the production of reconstituted milk drinks and the like. The chief object of the present invention is to provide a simple and cheap form of such apparatus which will be efficient in use, which will have a minimum number of moving parts liable to get out of order and which, furthermore, will have the effect of aerating, or partly aerating, the finished mixture.

The mixing apparatus according to the present invention comprises essentially an agitator blade provided with a plurality of apertures adapted to extend into the substances to be mixed, and electromagnetic means for vibrating the said agitator blade, preferably at a high speed.

Preferably the lower end of the agitator blade is forked somewhat and the two parts are bent in opposite directions and skewed with respect to the plane of the blade so that they tend to set up a swirl in the liquid or mixture.

In order that this invention may be the more clearly understood and readily carried into effect, reference may be made to the accompanying drawings which illustrate by way of example one convenient embodiment of this invention, and in which—

Figure 1 is a perspective view of the mixing apparatus, part of the same being broken away the more clearly to show the construction.

Figure 2 is a vertical section through the same, and

Figure 3 is a perspective view, on an enlarged scale of the lower end of the agitator blade.

Referring now to the accompanying drawings, the mixing apparatus therein illustrated comprises a base 10 carrying a standard 11 at the upper end of which is arranged a housing 12 for the driving means, said housing 12 projecting forwardly over the base 10 as shown. The standard 11 carries the usual curved locating plate 13 for the beaker 14 containing the liquid and other substance or substances to be mixed, the upper part of the plate 13 conveniently being provided with a clip 15 to hold the rim of the beaker (see Figure 2), and a pivoted arm 16 projects through an aperture 17 in the plate 13. In use, the bottom of the beaker 14 rests on the arm 16 and, by reason of its weight, causes the same to move about its pivot 18 to close a switch 19 within the standard 11 to complete the circuit from a three-pin plug 20 in the base 10 to the driving means. All the

2

parts so far described are of conventional form and may be modified at will without departing from the scope of the present invention which is concerned with the means for agitating the liquid and other substance or substances within the beaker.

The agitating means according to the present invention comprise a blade 21 mounted at its upper end as at 22 within the housing 12 and extending downwardly in front of the beaker locating plate 13 in such a position that it becomes disposed at the centre, or approximately at the centre, of the beaker when the same is in position (see Figure 2). The blade 21 is vibrated backwards and forwards at a high speed by means of an electro-magnet 23 within the housing 12. The armature 24 of the electro-magnet 23 is secured to the agitator blade 21 at a suitable point below its mounting and extends transversely of the same. The agitator blade 21 is conveniently damped by means of a resilient pad 25 adjacent the point 22 at which it is mounted within the housing 12 in order to limit the amount of vibration of the blade and to prevent spread.

It is preferred to feed A. C. to the field coil of the electro-magnet 23 since not only will this simplify and cheapen the cost of producing the apparatus since no make and break contacts will be required but it also has the advantage that there will be no radio interference and hence it will be unnecessary to fit suppressors. It must be clearly understood, however, that the field coil of the electro-magnet 23 may be fed with D. C. without departing from the scope of the present invention, in which case the usual make and break contacts would be provided.

The agitator blade 21, as above stated, is adapted to extend down inside the beaker, and it is of such a length that it reaches down almost to the bottom of the beaker (see Figure 2). The lower end of the blade is forked somewhat as at 26 and the two parts 27 and 28 are bent in opposite direction and skewed slightly with respect to the remainder of the blade (see Figure 3). The effect of this is that as the blade 21 is vibrated at a high speed by means of the electro-magnet 23 a swirl is imparted to the liquid in the beaker which materially assists in the mixing of the ingredients.

Above its forked and bent lower end the agitator blade 21 is provided with a number of holes 29. The number of holes 29, their size and disposition may vary within wide limits without departing from the scope of the present

invention but it has been found that with an agitator blade one inch wide very efficient results can be obtained with twenty-one holes approximately one-eighth inch in diameter arranged in sets of three transversely across the blade.

When the blade 21 is vibrated at a high speed the ingredients within the beaker are not only agitated by the blade itself but are also thrown backwards and forwards through the holes 29 with the result that not only are the ingredients thoroughly mixed but they are also very effectively aerated, the high speed of vibration of the blade drawing air in, and the holes thoroughly dispersing the same throughout the mixture in the beaker.

The mixing apparatus according to the present invention is not only simple and cheap to produce, it is efficient in operation and foolproof, and it has the further advantage that it is easy to clean. If the blade be made of stainless steel, as it preferably is, all that is necessary is to rub it over with a damp cloth.

I claim:

1. In an electro-magnetically actuated mixing apparatus, a substantially planar agitator blade having therein a plurality of apertures, the lower end of said blade being recesed substantially at the middle portion thereof, forming two projecting ears, said ears being bent out of the plane of said blade in opposite directions and extending downwardly, and means for vibrating said blade at relatively high speed in a direction perpendicular to the plane thereof, whereby said ears oscillate substantially linearly in the medium to be mixed.

2. Mixing apparatus according to claim 1, in which said ears are so shaped as to each present two relatively sharp corners, whereby the mixing operation is facilitated.

HENRY WALTER MORGAN.

REFERENCES CITED

The following references are of record in the file of this patent:

UNITED STATES PATENTS

Number	Name	Date
55,491	Hall	Jan. 12, 1866
1,704,026	Wahl	Mar. 5, 1929
1,705,162	Wahl	Mar. 12, 1929
1,948,431	Rolph	Feb. 20, 1934