US009505233B2

(12) **United States Patent**
Gisler et al.

(10) **Patent No.: US 9,505,233 B2**
(45) **Date of Patent: Nov. 29, 2016**

(54) **TENSIONING CONTROL DEVICE**

(71) Applicant: **Becton, Dickinson and Company**, Franklin Lakes, NJ (US)

(72) Inventors: **Scott William Gisler**, Washingtonville, NY (US); **Philip C. McNeill**, Tarrytown, NY (US); **Kaushal Verma**, Somerset, NJ (US)

(73) Assignee: **Becton, Dickinson and Company**, Franklin Lakes, NJ (US)

(*) Notice: Subject to any disclaimer, the term of this patent is extended or adjusted under 35 U.S.C. 154(b) by 0 days.

(21) Appl. No.: **14/878,509**

(22) Filed: **Oct. 8, 2015**

(65) **Prior Publication Data**

US 2016/0101632 A1 Apr. 14, 2016

Related U.S. Application Data

(60) Provisional application No. 62/062,279, filed on Oct. 10, 2014.

(51) **Int. Cl.**

B65H 23/18	(2006.01)
B41J 15/16	(2006.01)
B41J 3/407	(2006.01)
B65C 3/08	(2006.01)
B65C 9/42	(2006.01)

(52) **U.S. Cl.**

CPC ***B41J 3/4075*** (2013.01); ***B41J 15/16*** (2013.01); ***B65C 3/08*** (2013.01); ***B65C 9/42*** (2013.01); ***B65H 23/1806*** (2013.01); *B65H 2801/75* (2013.01)

(58) **Field of Classification Search**

CPC B41J 3/4075; B41J 15/16; B41J 15/165; A61J 2205/30; B65H 23/1806; B65H 23/1825; B65H 23/1888; B65H 23/192; B65H 2301/41912; B65H 2701/194; B65H 2801/75

See application file for complete search history.

(56) **References Cited**

U.S. PATENT DOCUMENTS

607,941	A	7/1898	Mayo	
614,703	A	11/1898	Delory	
3,430,625	A	3/1969	McLeod, Jr.	
3,835,897	A	9/1974	Gess	
4,003,252	A	1/1977	Dewath	
4,415,802	A	11/1983	Long	
4,801,853	A *	1/1989	Lewis	G11B 15/50 242/334.4

(Continued)

FOREIGN PATENT DOCUMENTS

GB	2183046	B	5/1987
GB	2504288	A	1/2014

(Continued)

Primary Examiner — Anh T. N. Vo
(74) *Attorney, Agent, or Firm* — The Webb Law Firm

(57) **ABSTRACT**

A tensioning control device having a first motor that applies a torque to a first end of a substrate in a first direction and a second motor that applies a torque to a second end of the substrate in a second direction that is generally opposite the first direction is disclosed. In this manner, the first motor and the second motor apply torque to the substrate in opposing directions, thereby placing the substrate in tension. In one embodiment, the first motor applies a torque to the first end of the substrate that is equal to the torque applied to the second end of the substrate by the second motor. By placing the substrate in tension in this manner, an actuator is able to incrementally move the substrate in a forward direction and a backward direction independent of the tension applied to the substrate.

18 Claims, 23 Drawing Sheets

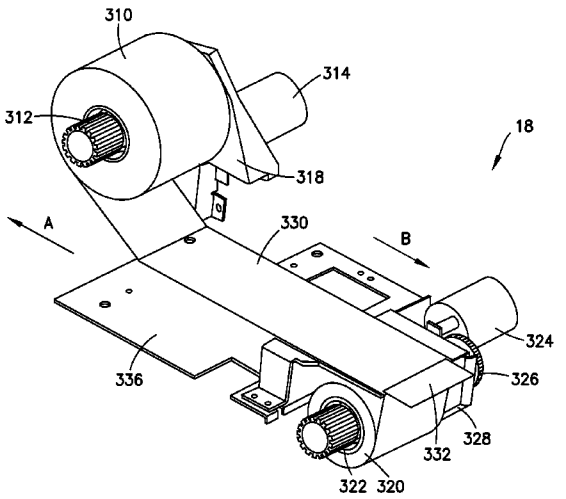

(56) **References Cited**

U.S. PATENT DOCUMENTS

4,853,521 A 8/1989 Claeys et al.
4,857,713 A 8/1989 Brown
4,921,277 A 5/1990 McDonough
4,978,335 A 12/1990 Arthur, III
5,040,422 A 8/1991 Frankenberger et al.
5,078,683 A 1/1992 Sancoff et al.
5,179,862 A 1/1993 Lynnworth
5,247,826 A 9/1993 Frola et al.
5,317,506 A 5/1994 Coutre et al.
5,429,602 A 7/1995 Hauser
5,463,906 A 11/1995 Spani et al.
5,531,697 A 7/1996 Olsen et al.
5,531,698 A 7/1996 Olsen
5,569,212 A 10/1996 Brown
5,611,784 A 3/1997 Barresi et al.
5,612,524 A 3/1997 Sant'Anselmo et al.
5,628,309 A 5/1997 Brown
5,651,775 A 7/1997 Walker et al.
5,692,640 A 12/1997 Caulfield et al.
5,720,733 A 2/1998 Brown
5,740,428 A 4/1998 Mortimore et al.
5,782,814 A 7/1998 Brown et al.
5,792,117 A 8/1998 Brown
5,845,264 A 12/1998 Nellhaus
5,873,731 A 2/1999 Prendergast
5,882,338 A 3/1999 Gray
5,925,014 A 7/1999 Teeple, Jr.
6,106,498 A 8/2000 Friedli et al.
6,123,686 A 9/2000 Olsen et al.
D438,634 S 3/2001 Merry
6,249,299 B1 6/2001 Tainer
6,256,037 B1 7/2001 Callahan
6,336,752 B1 * 1/2002 Balopole G03B 9/38 396/459
6,341,174 B1 1/2002 Callahan et al.
6,342,889 B1 1/2002 Callahan
6,381,029 B1 4/2002 Tipirneni
6,422,094 B1 7/2002 Ganshorn
6,464,667 B1 10/2002 Kamen et al.
6,482,185 B1 11/2002 Hartmann
6,519,569 B1 2/2003 White et al.
RE38,189 E 7/2003 Walker et al.
6,626,355 B2 9/2003 Sasse et al.
6,641,562 B1 11/2003 Peterson
6,644,130 B2 11/2003 Imai et al.
6,675,660 B1 1/2004 Mosier et al.
6,685,227 B2 2/2004 Merry et al.
6,685,678 B2 2/2004 Evans et al.
6,697,067 B1 2/2004 Callahan et al.
6,733,495 B1 5/2004 Bek et al.
6,742,992 B2 6/2004 Davis
6,798,533 B2 9/2004 Tipirneni
6,814,254 B2 * 11/2004 Liff G06F 19/3462 221/13
6,825,864 B2 11/2004 Botten et al.
6,854,338 B2 2/2005 Khuri-Yakub et al.
6,985,870 B2 1/2006 Martucci et al.
7,000,485 B2 2/2006 Ao et al.
7,074,209 B2 7/2006 Evans et al.
7,077,289 B2 * 7/2006 Ross A61F 15/002 221/225
7,106,479 B2 9/2006 Roy et al.
7,115,113 B2 10/2006 Evans et al.
7,116,343 B2 10/2006 Botten et al.
7,161,488 B2 1/2007 Frasch
7,175,081 B2 2/2007 Andreasson et al.
7,180,624 B2 2/2007 Tipirneni
7,182,256 B2 2/2007 Andreasson et al.
7,225,683 B2 6/2007 Harnett et al.
7,236,936 B2 6/2007 White et al.
7,237,199 B1 6/2007 Menhardt et al.
7,264,323 B2 9/2007 Tainer et al.
7,299,981 B2 11/2007 Hickle et al.
7,303,467 B2 * 12/2007 Birang B24B 21/004 451/289
7,319,540 B2 1/2008 Tipirneni
7,347,841 B2 3/2008 Elhadad et al.
7,358,505 B2 4/2008 Woodworth et al.
7,360,448 B2 4/2008 Maginnis et al.
7,375,737 B2 5/2008 Botten et al.
7,442,181 B2 10/2008 Schubert et al.
7,469,598 B2 12/2008 Shkarlet et al.
7,469,599 B2 12/2008 Froehlich et al.
D588,200 S 3/2009 Langan et al.
7,534,239 B1 5/2009 Schneider et al.
D593,613 S 6/2009 Langan et al.
D595,361 S 6/2009 Langan et al.
7,559,483 B2 7/2009 Hickle et al.
7,564,579 B2 7/2009 Tipirneni
D597,608 S 8/2009 Langan et al.
D602,534 S 10/2009 Langan et al.
7,614,545 B2 11/2009 Christoffersen et al.
7,617,739 B1 11/2009 Dam
D605,228 S 12/2009 Langan et al.
D605,229 S 12/2009 Langan et al.
D605,230 S 12/2009 Langan et al.
7,645,258 B2 1/2010 White et al.
7,673,527 B2 3/2010 Ehring et al.
7,694,565 B2 4/2010 Koerdt et al.
7,703,336 B2 4/2010 Genosar
7,704,231 B2 4/2010 Pongpairochana et al.
7,753,880 B2 7/2010 Malackowski
7,753,891 B2 7/2010 Tennican et al.
7,756,724 B2 7/2010 Gropper et al.
7,763,006 B2 7/2010 Tennican
D621,879 S 8/2010 Langan et al.
D621,880 S 8/2010 Langan et al.
7,776,018 B2 8/2010 Bush, Jr. et al.
D624,595 S 9/2010 Langan et al.
D624,596 S 9/2010 Langan et al.
7,799,010 B2 9/2010 Tennican
7,815,123 B2 10/2010 Conner et al.
7,815,605 B2 10/2010 Souter
7,819,838 B2 10/2010 Ziegler et al.
7,822,096 B2 10/2010 Kuksenkov
7,859,473 B2 12/2010 Gibson
D633,151 S 2/2011 Langan et al.
7,887,513 B2 2/2011 Nemoto et al.
D634,367 S 3/2011 Langan et al.
D634,368 S 3/2011 Langan et al.
D634,369 S 3/2011 Langan et al.
7,905,861 B2 3/2011 Rhinehart et al.
7,918,830 B2 4/2011 Langan et al.
7,927,313 B2 4/2011 Stewart et al.
7,933,780 B2 4/2011 De La Huerga
7,941,949 B2 5/2011 Cloninger
D639,861 S 6/2011 Langan et al.
D639,862 S 6/2011 Langan et al.
D639,863 S 6/2011 Langan et al.
7,967,778 B2 6/2011 Nemoto et al.
D641,421 S 7/2011 Langan et al.
D641,422 S 7/2011 Langan et al.
7,976,508 B2 7/2011 Hoag
D643,468 S 8/2011 Langan et al.
D643,469 S 8/2011 Langan et al.
D643,470 S 8/2011 Langan et al.
D643,471 S 8/2011 Langan et al.
D643,472 S 8/2011 Langan et al.
7,991,627 B2 8/2011 Hutchinson et al.
D645,094 S 9/2011 Langan et al.
8,031,347 B2 10/2011 Edwards et al.
D649,196 S 11/2011 Langan et al.
8,059,297 B2 11/2011 Tipirneni
8,063,925 B2 11/2011 Tainer et al.
8,065,924 B2 11/2011 Ziegler et al.
8,069,060 B2 11/2011 Tipirneni
8,111,159 B2 2/2012 Andreasson et al.
8,140,349 B2 3/2012 Hanson et al.
8,235,938 B2 8/2012 Eggers et al.
8,328,082 B1 12/2012 Bochenko et al.
8,355,753 B2 1/2013 Bochenko et al.
8,356,434 B2 * 1/2013 Alipour G09F 3/0289 215/203
8,385,972 B2 2/2013 Bochenko et al.

(56) **References Cited**

U.S. PATENT DOCUMENTS

8,394,053	B2	3/2013	Bochenko et al.	
8,494,093	B1	7/2013	Zhang	
8,524,333	B2 *	9/2013	Fujinami	C23C 16/345 427/569
8,582,171	B2	11/2013	Srnka et al.	
8,606,596	B1	12/2013	Bochenko et al.	
8,639,525	B2	1/2014	Levine et al.	
8,662,626	B2 *	3/2014	Kahl	B65H 23/1888 347/19
8,702,674	B2	4/2014	Bochenko	
8,734,039	B2 *	5/2014	Castells	B41J 15/02 400/613
8,752,088	B1	6/2014	Harvey et al.	
8,945,066	B2	2/2015	Bochenko et al.	
9,039,655	B2	5/2015	Prince et al.	
9,044,977	B2 *	6/2015	McLaughlin	B41J 11/42
9,078,809	B2	7/2015	Bochenko et al.	
9,101,534	B2	8/2015	Bochenko	
2001/0020148	A1	9/2001	Sasse et al.	
2001/0049608	A1	12/2001	Hochman	
2001/0056258	A1	12/2001	Evans	
2002/0040208	A1	4/2002	Flaherty et al.	
2002/0099334	A1	7/2002	Hanson et al.	
2002/0188259	A1	12/2002	Hickle et al.	
2003/0055685	A1	3/2003	Cobb et al.	
2003/0135388	A1	7/2003	Martucci et al.	
2003/0139701	A1	7/2003	White et al.	
2003/0160698	A1	8/2003	Andreasson et al.	
2003/0164401	A1	9/2003	Andreasson et al.	
2004/0082918	A1	4/2004	Evans et al.	
2004/0105115	A1	6/2004	Edwards et al.	
2004/0179051	A1	9/2004	Tainer et al.	
2004/0179132	A1	9/2004	Fujino et al.	
2004/0193453	A1	9/2004	Butterfield et al.	
2004/0212834	A1	10/2004	Edwards et al.	
2004/0238631	A1	12/2004	Andreasson et al.	
2005/0070978	A1	3/2005	Bek et al.	
2005/0088306	A1	4/2005	Andreasson et al.	
2005/0101905	A1	5/2005	Merry	
2005/0118048	A1	6/2005	Traxinger	
2005/0151652	A1	7/2005	Frasch	
2005/0151823	A1	7/2005	Botten et al.	
2005/0154368	A1	7/2005	Lim et al.	
2005/0277873	A1	12/2005	Stewart et al.	
2005/0277890	A1	12/2005	Stewart et al.	
2006/0032918	A1	2/2006	Andreasson et al.	
2006/0065713	A1	3/2006	Kingery	
2006/0079843	A1	4/2006	Brooks et al.	
2006/0102503	A1	5/2006	Elhadad et al.	
2006/0143051	A1	6/2006	Eggers et al.	
2006/0144942	A1	7/2006	Evans et al.	
2006/0178617	A1	8/2006	Adams et al.	
2006/0190302	A1	8/2006	Eggers et al.	
2006/0206356	A1	9/2006	Vanderveen	
2006/0224125	A1	10/2006	Simpson et al.	
2006/0229551	A1	10/2006	Martinez et al.	
2006/0270997	A1	11/2006	Lim et al.	
2006/0287887	A1	12/2006	Hutchinson et al.	
2007/0008399	A1	1/2007	Botten et al.	
2007/0100316	A1	5/2007	Traxinger	
2007/0134044	A1	6/2007	Colbrunn et al.	
2007/0167919	A1	7/2007	Nemoto et al.	
2007/0179448	A1	8/2007	Lim et al.	
2007/0187475	A1	8/2007	MacLeod	
2007/0191787	A1	8/2007	Lim et al.	
2007/0255199	A1	11/2007	Dewey	
2007/0280710	A1	12/2007	Tainer et al.	
2007/0293830	A1	12/2007	Martin	
2008/0043088	A1	2/2008	Botten et al.	
2008/0071219	A1	3/2008	Rhinehart et al.	
2008/0118141	A1	5/2008	Sommer et al.	
2008/0191013	A1	8/2008	Liberatore	
2008/0243088	A1	10/2008	Evans	
2008/0255523	A1	10/2008	Grinberg	
2008/0294108	A1	11/2008	Briones et al.	
2008/0306439	A1	12/2008	Nelson et al.	
2009/0018494	A1	1/2009	Nemoto et al.	
2009/0043253	A1	2/2009	Podaima	
2009/0112178	A1	4/2009	Behzadi	
2009/0112333	A1	4/2009	Sahai	
2009/0126866	A1	5/2009	Stenner et al.	
2009/0137956	A1	5/2009	Souter	
2009/0143673	A1	6/2009	Drost et al.	
2009/0149744	A1	6/2009	Nemoto et al.	
2009/0156931	A1	6/2009	Nemoto et al.	
2009/0159654	A1	6/2009	Grimard	
2009/0200185	A1	8/2009	Follman et al.	
2009/0259176	A1	10/2009	Yairi	
2009/0288497	A1	11/2009	Ziegler et al.	
2009/0296540	A1	12/2009	Gilbert et al.	
2009/0306620	A1	12/2009	Thilly et al.	
2010/0022953	A1	1/2010	Bochenko et al.	
2010/0022987	A1	1/2010	Bochenko et al.	
2010/0036310	A1	2/2010	Hillman	
2010/0036313	A1	2/2010	Shener et al.	
2010/0065633	A1	3/2010	Nelson et al.	
2010/0076310	A1	3/2010	Wenderow et al.	
2010/0095782	A1	4/2010	Ferencz et al.	
2010/0114951	A1	5/2010	Bauman et al.	
2010/0145165	A1	6/2010	Merry	
2010/0204659	A1	8/2010	Bochenko et al.	
2010/0280486	A1	11/2010	Khair et al.	
2010/0286599	A1	11/2010	Ziegler et al.	
2010/0305499	A1	12/2010	Matsiev et al.	
2011/0009800	A1	1/2011	Dam et al.	
2011/0009817	A1	1/2011	Bennett et al.	
2011/0028937	A1	2/2011	Powers et al.	
2011/0060198	A1	3/2011	Bennett et al.	
2011/0111794	A1	5/2011	Bochenko et al.	
2011/0112473	A1	5/2011	Bochenko et al.	
2011/0112474	A1	5/2011	Bochenko et al.	
2011/0137288	A1	6/2011	Tallarida et al.	
2011/0152824	A1	6/2011	DiPerna et al.	
2011/0152825	A1	6/2011	Marggi	
2011/0152834	A1	6/2011	Langan et al.	
2011/0161112	A1	6/2011	Keefe et al.	
2011/0166511	A1	7/2011	Sharvit et al.	
2011/0185821	A1	8/2011	Genosar	
2011/0259954	A1	10/2011	Bartz et al.	
2011/0264069	A1	10/2011	Bochenko	
2011/0315611	A1	12/2011	Fulkerson et al.	
2012/0004602	A1	1/2012	Hanson et al.	
2012/0004637	A1	1/2012	Krulevitch et al.	
2012/0006127	A1	1/2012	Nielsen	
2012/0022458	A1	1/2012	Oh et al.	
2012/0035535	A1	2/2012	Johnson et al.	
2012/0037266	A1	2/2012	Bochenko	
2012/0046295	A1	2/2012	Charrier et al.	
2012/0065617	A1	3/2012	Matsiev et al.	
2012/0287431	A1	11/2012	Matsiev et al.	
2012/0323208	A1	12/2012	Bochenko et al.	
2012/0325330	A1	12/2012	Prince et al.	
2013/0018356	A1	1/2013	Prince et al.	
2015/0204705	A1	7/2015	Forster et al.	
2015/0211904	A1	7/2015	Forster	

FOREIGN PATENT DOCUMENTS

GB	2504295	A	1/2014
GB	2504297	A	1/2014
WO	2007124821	A1	11/2007
WO	2009114115	A1	9/2009
WO	2010144482	A2	12/2010
WO	2011018804	A1	2/2011
WO	2012034084	A2	3/2012
WO	2014016311	A1	1/2014
WO	2014016315	A1	1/2014
WO	2014016316	A1	1/2014

* cited by examiner

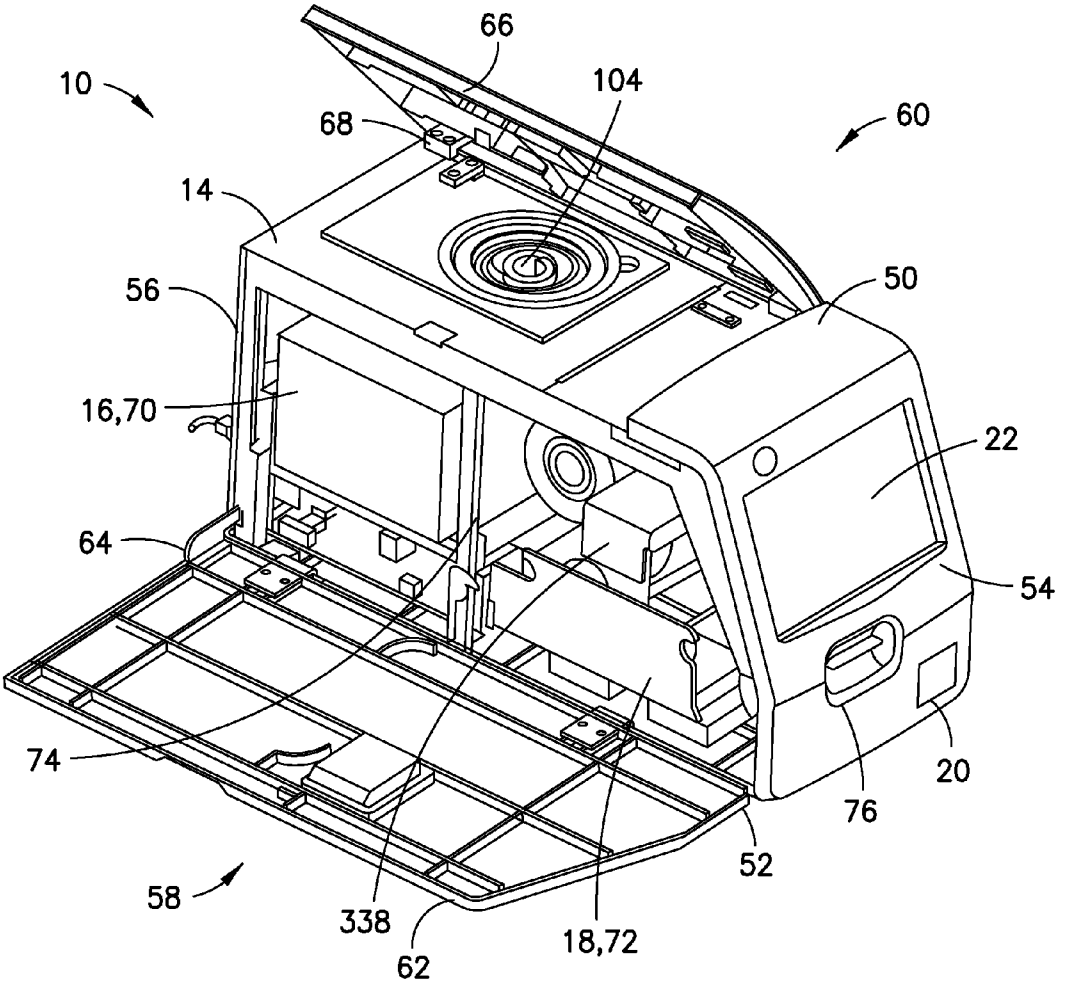

FIG. 1

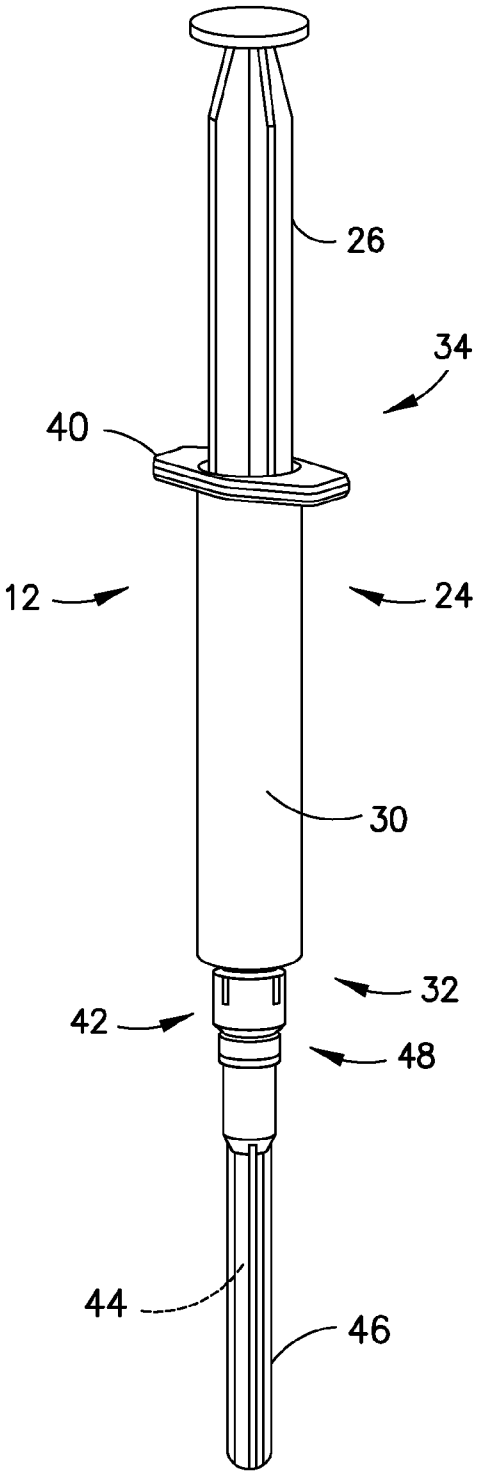

FIG.2A

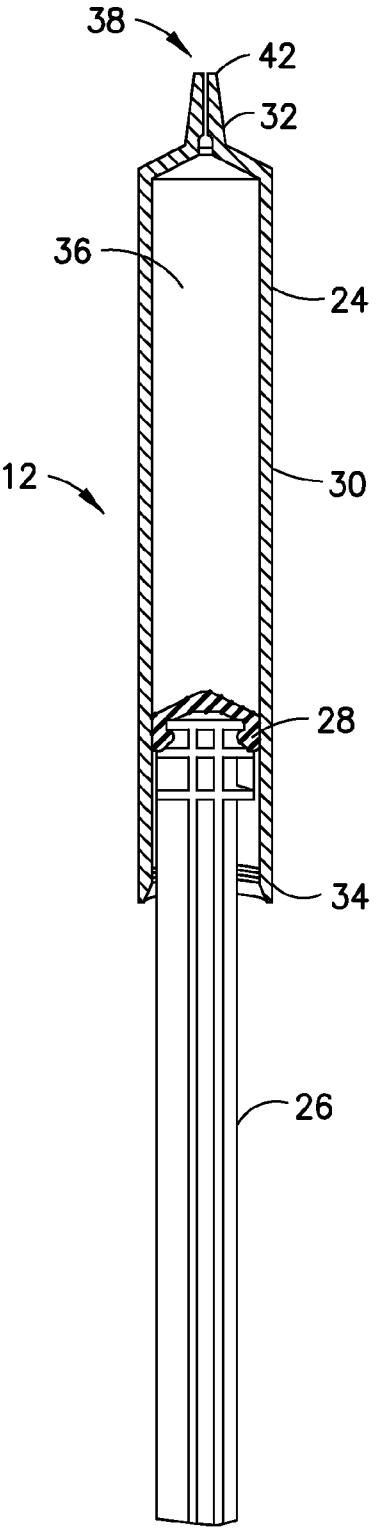

FIG.2B

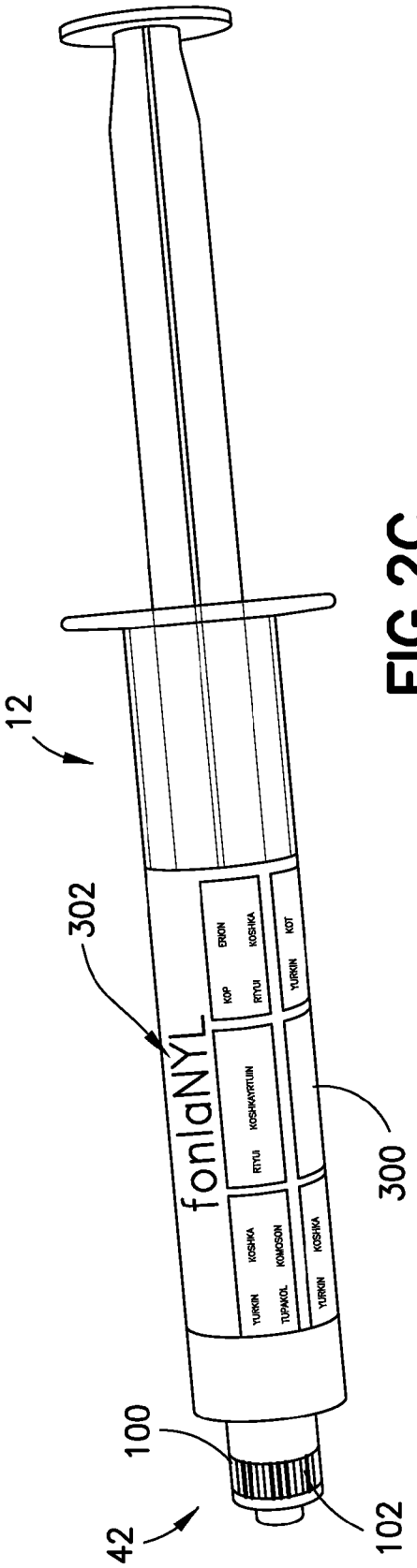
12
302
300
100
42
102
fonlaNYL
KOP
ERION
RYTJI
KOSHKA
KOT
YURKIN
RYTJI
KOSHKAYRTUIN
YURKIN
KOSHKA
TUPAKOL
KOMOSON
YURKIN
KOSHKA

FIG.2C

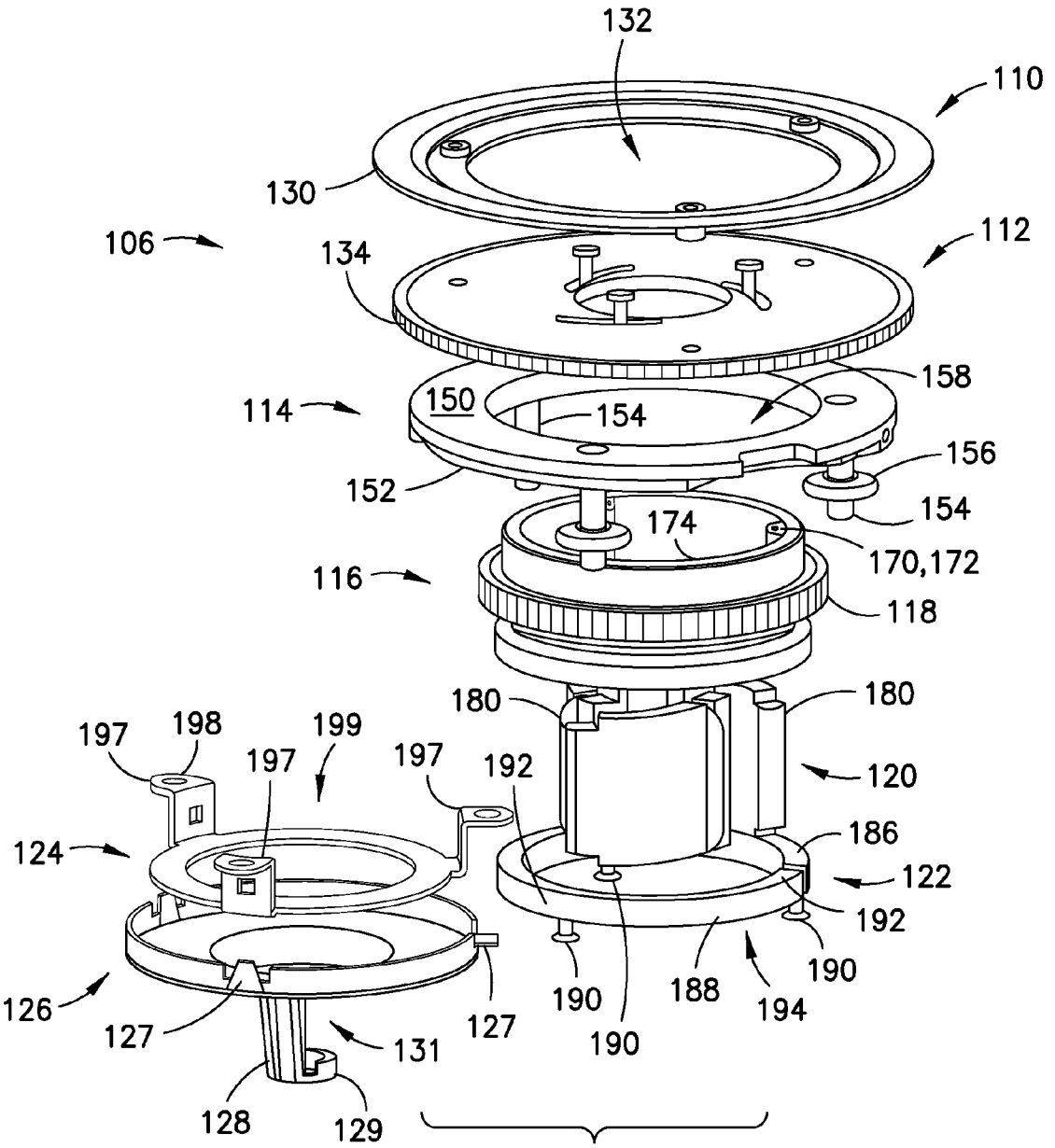
132
110
130
106
134
112
158
114
150
154
156
152
154
174
170,172
116
118
180
180
197
198
199
197
197
192
120
124
186
122
192
190
188
194
190
126
127
127
190
131
128
129

FIG.3

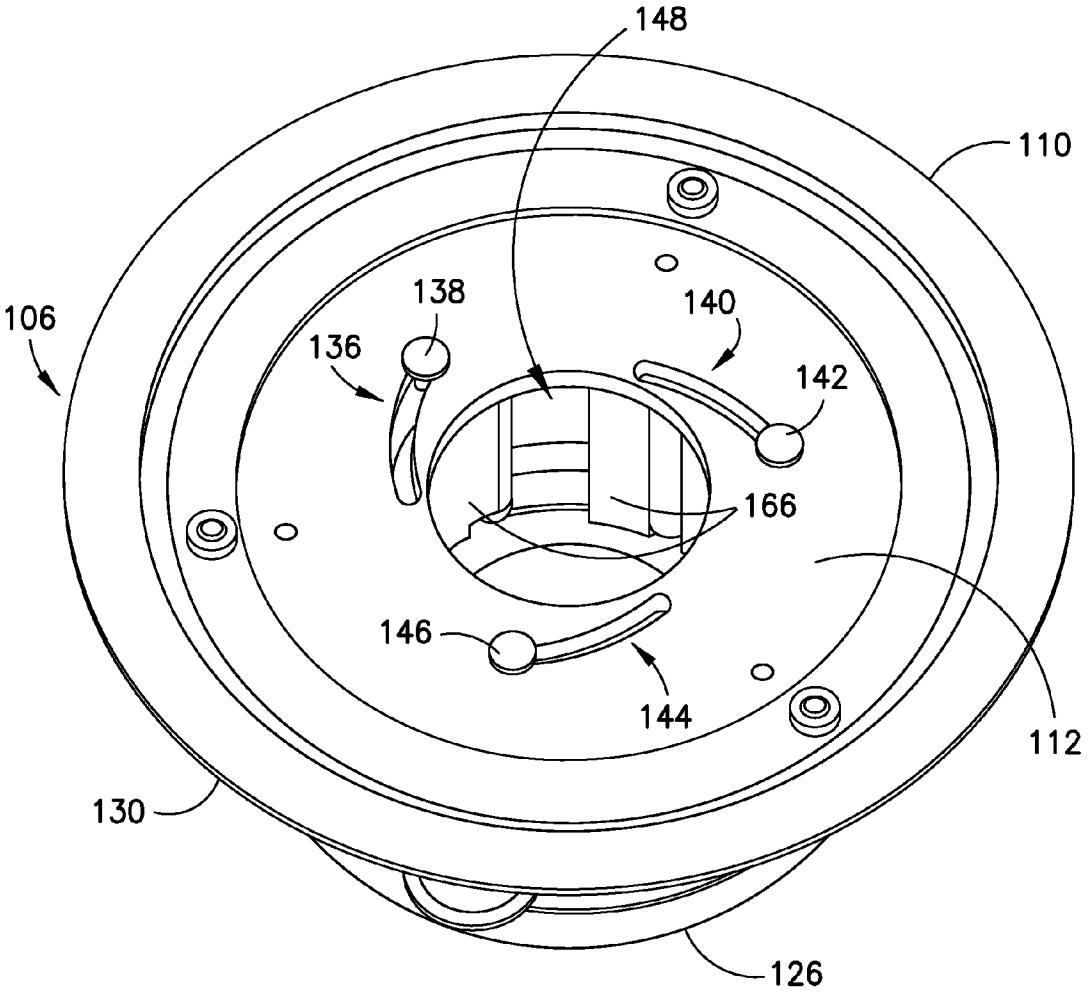

FIG.4

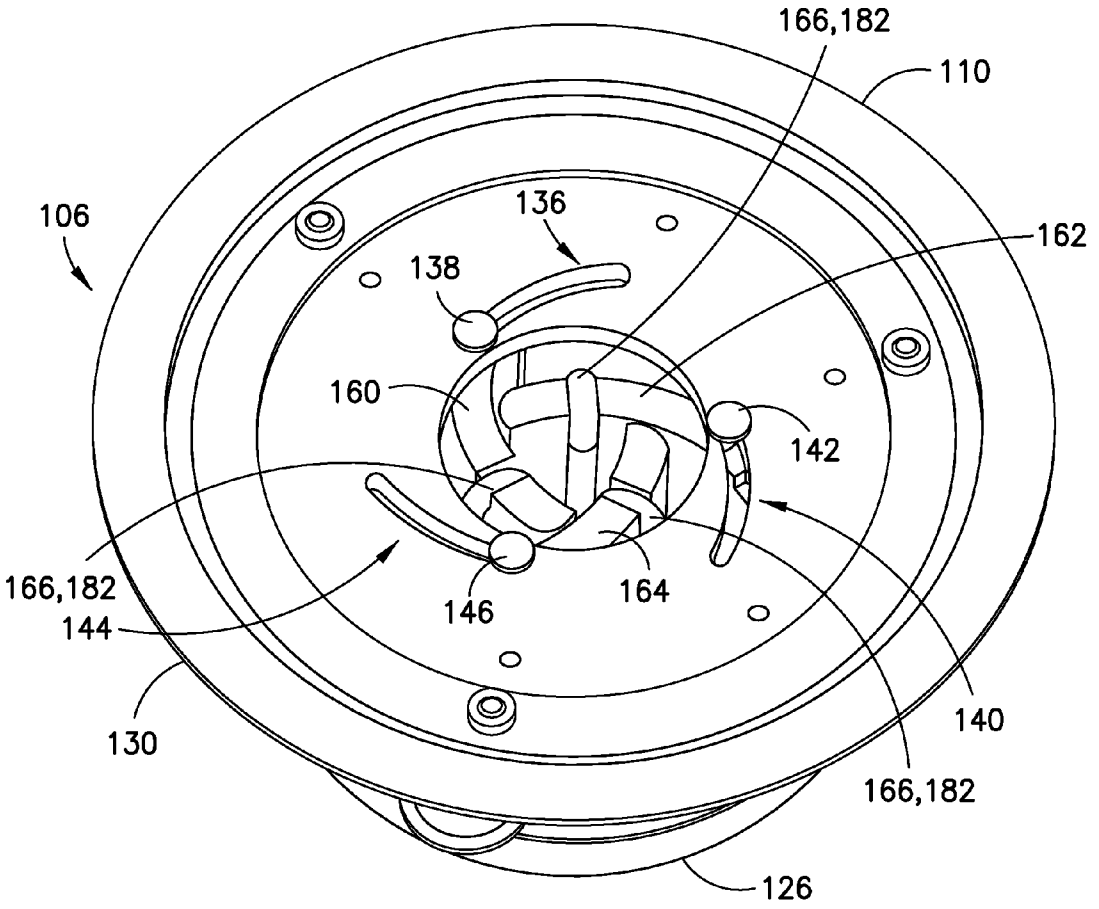
166,182
110
106
136
162
138
160
142
166,182
144
146
164
130
140
166,182
126

FIG.5

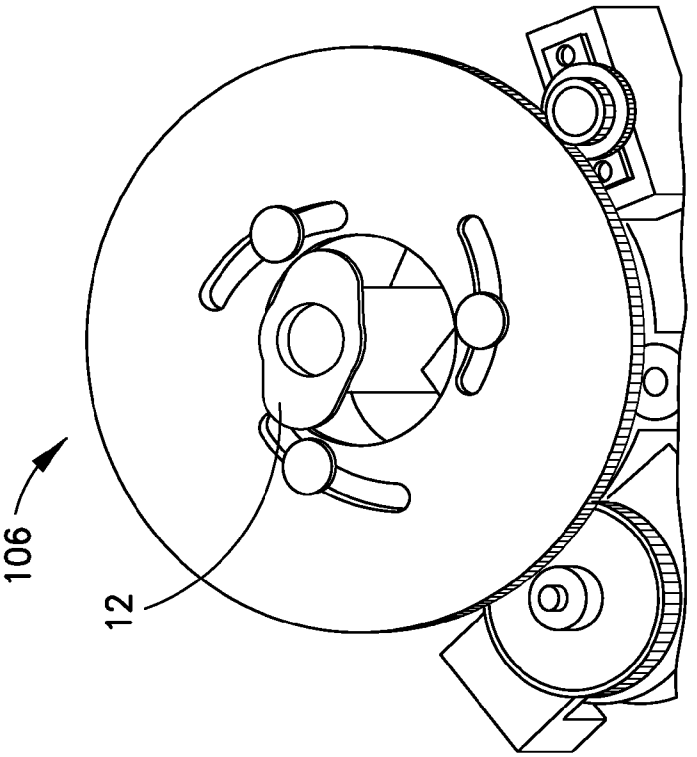

FIG.6B

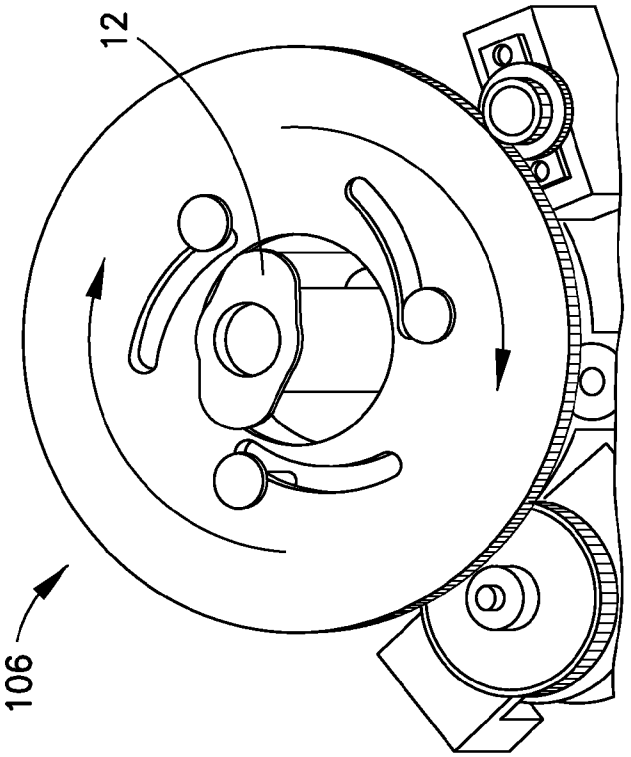

FIG.6A

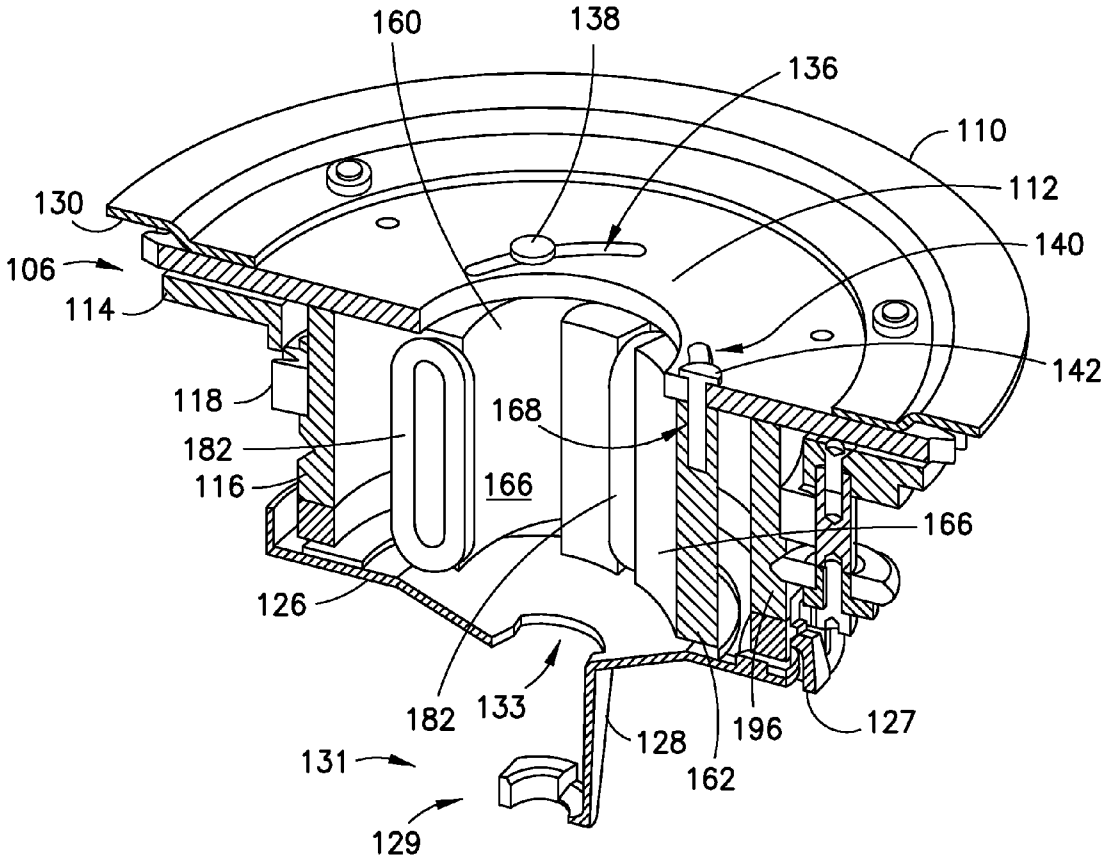
160
138
136
110
112
130
140
106
114
142
118
168
182
116
166
166
126
182
133
128
196
127
131
162
129

FIG.7

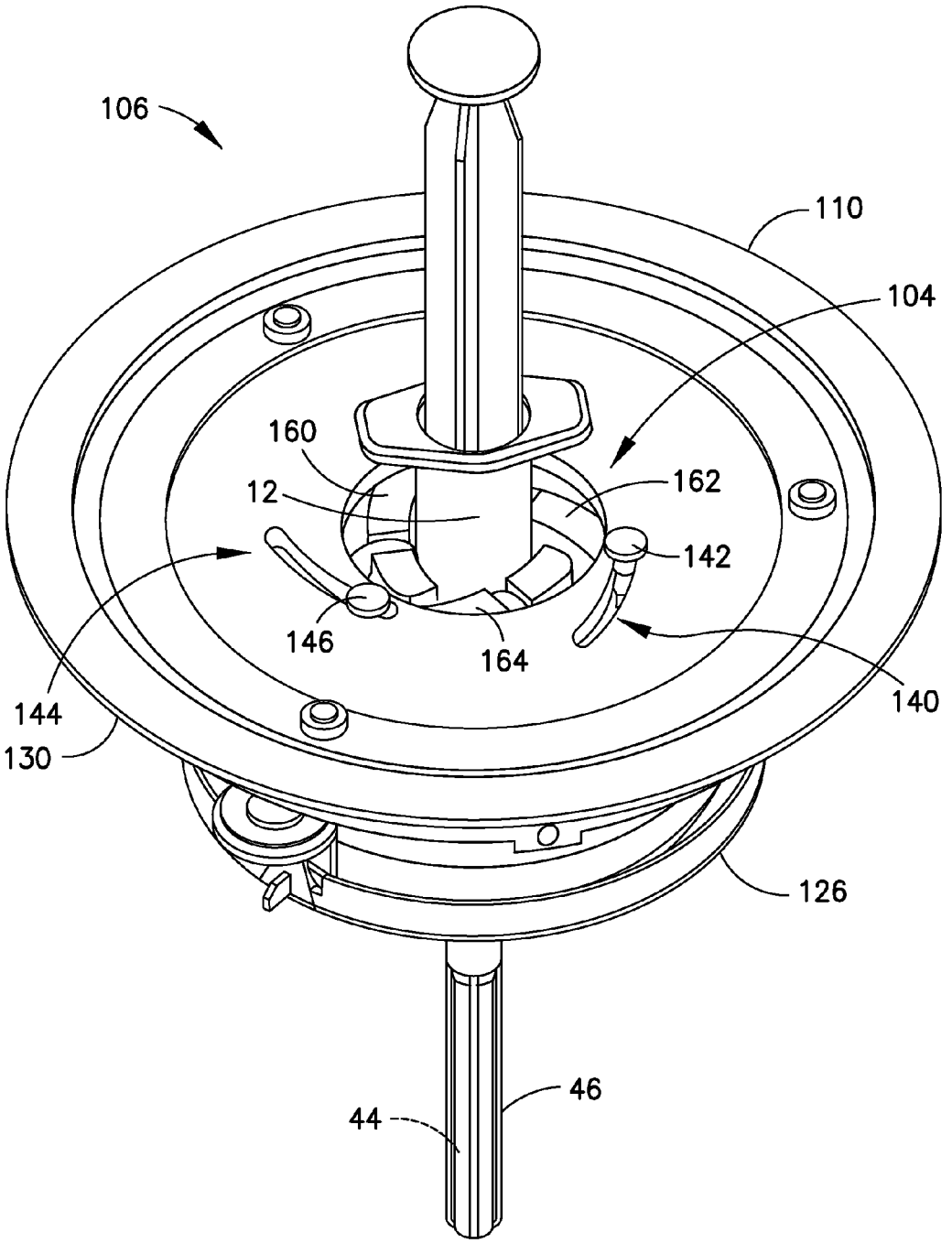

FIG.8

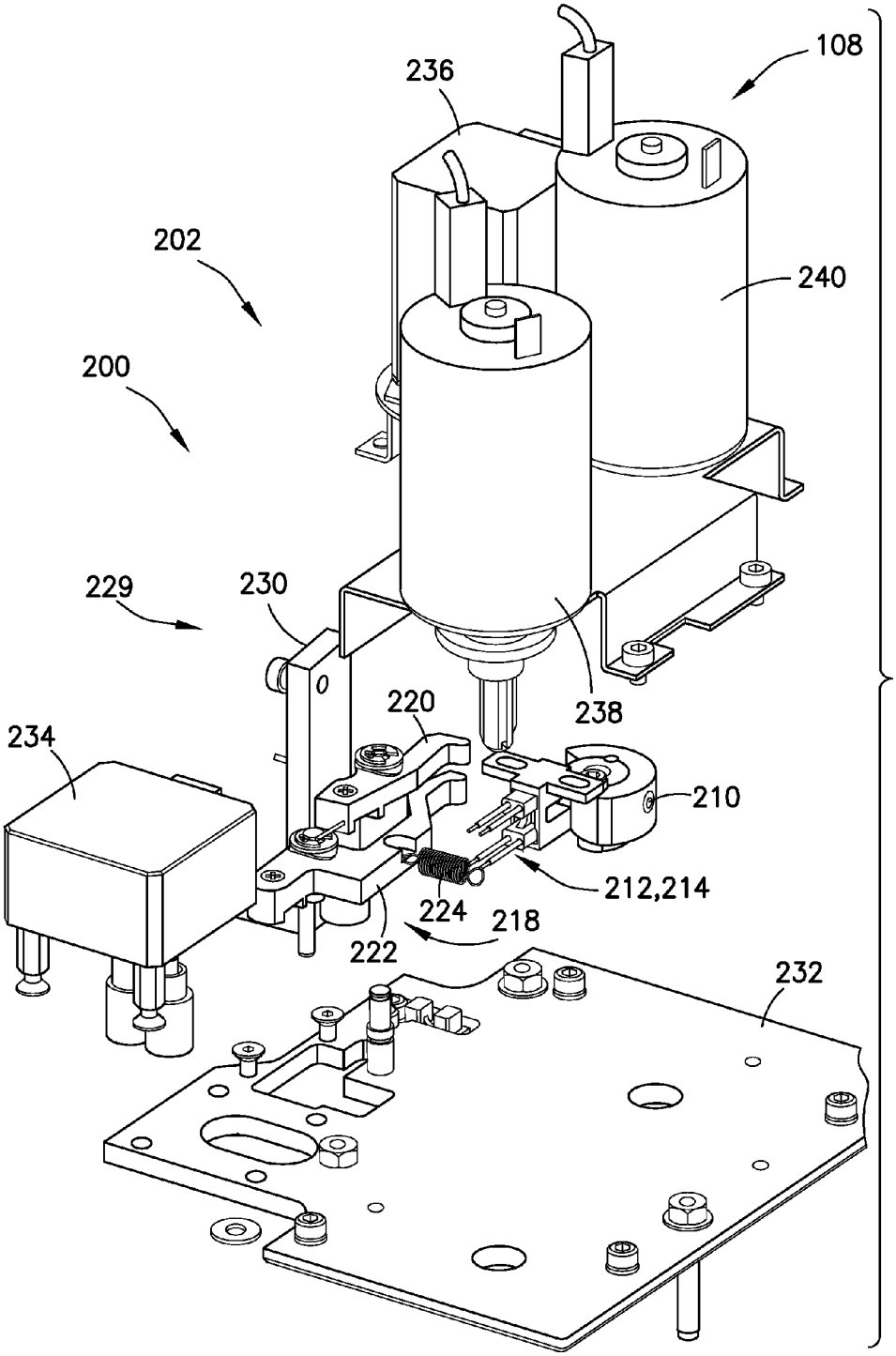
108
236
202
240
200
229
230
220
238
234
210
212,214
224
218
222
232

FIG.9

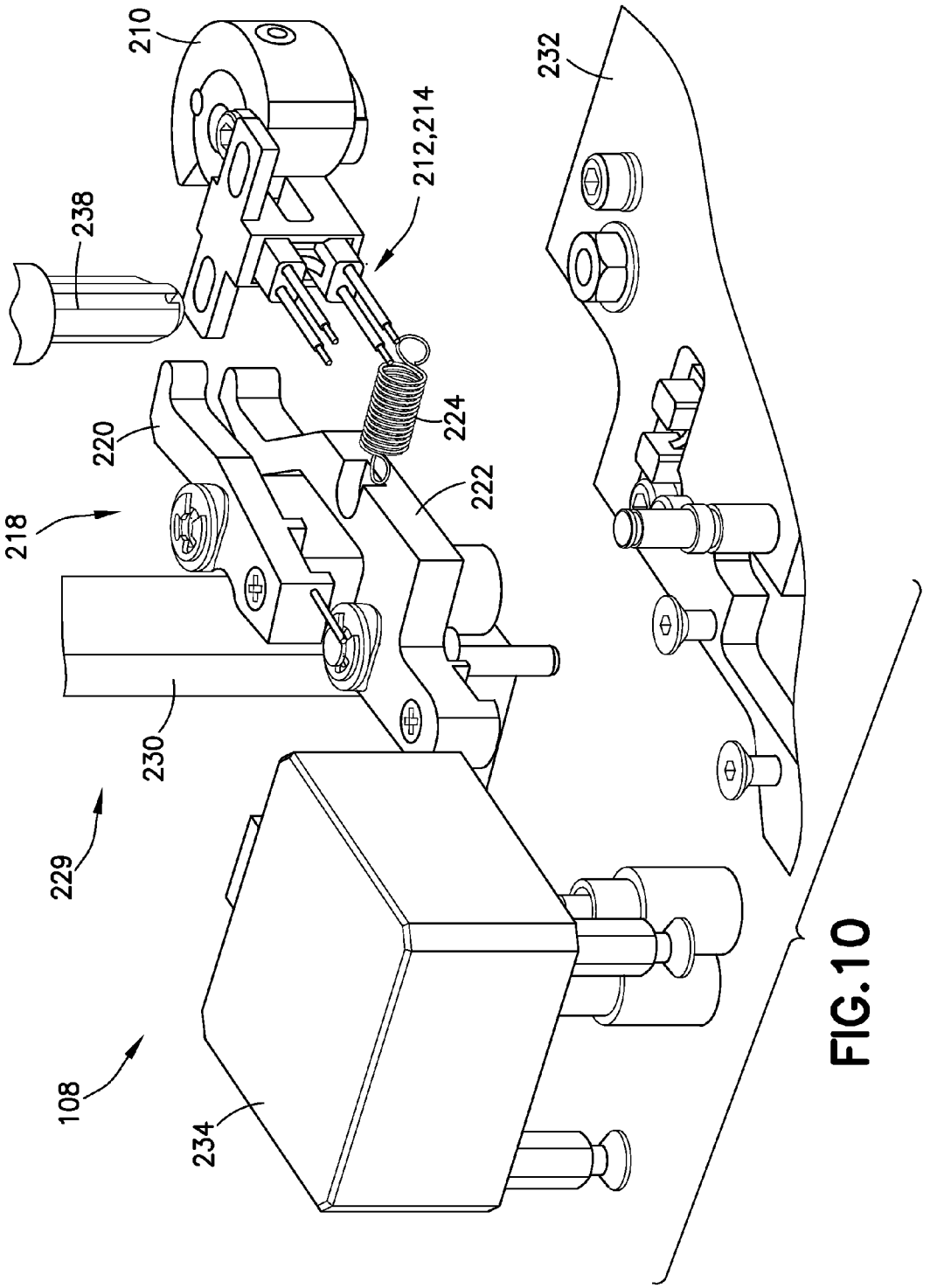

FIG. 10

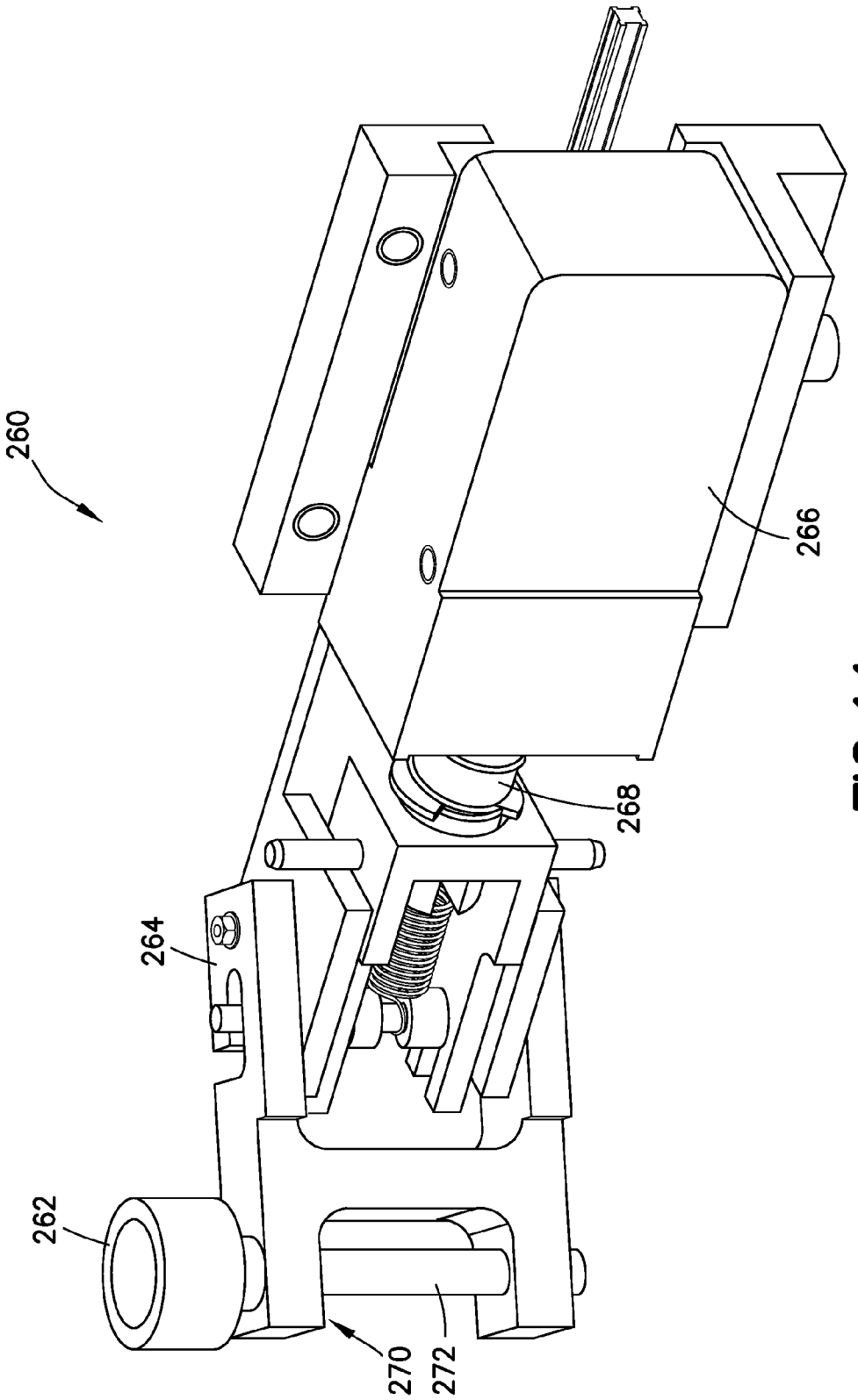

FIG. 11

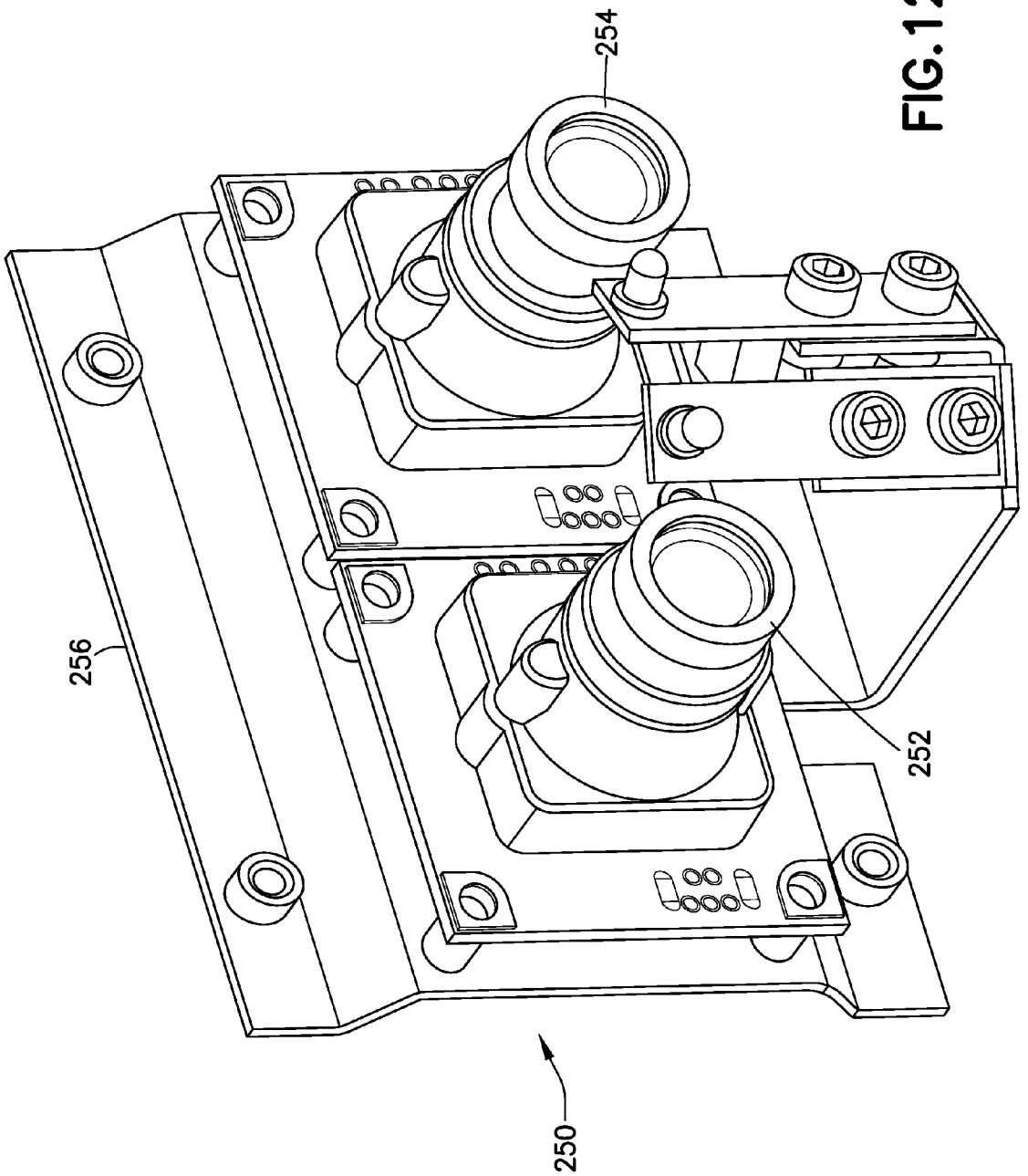

FIG. 12

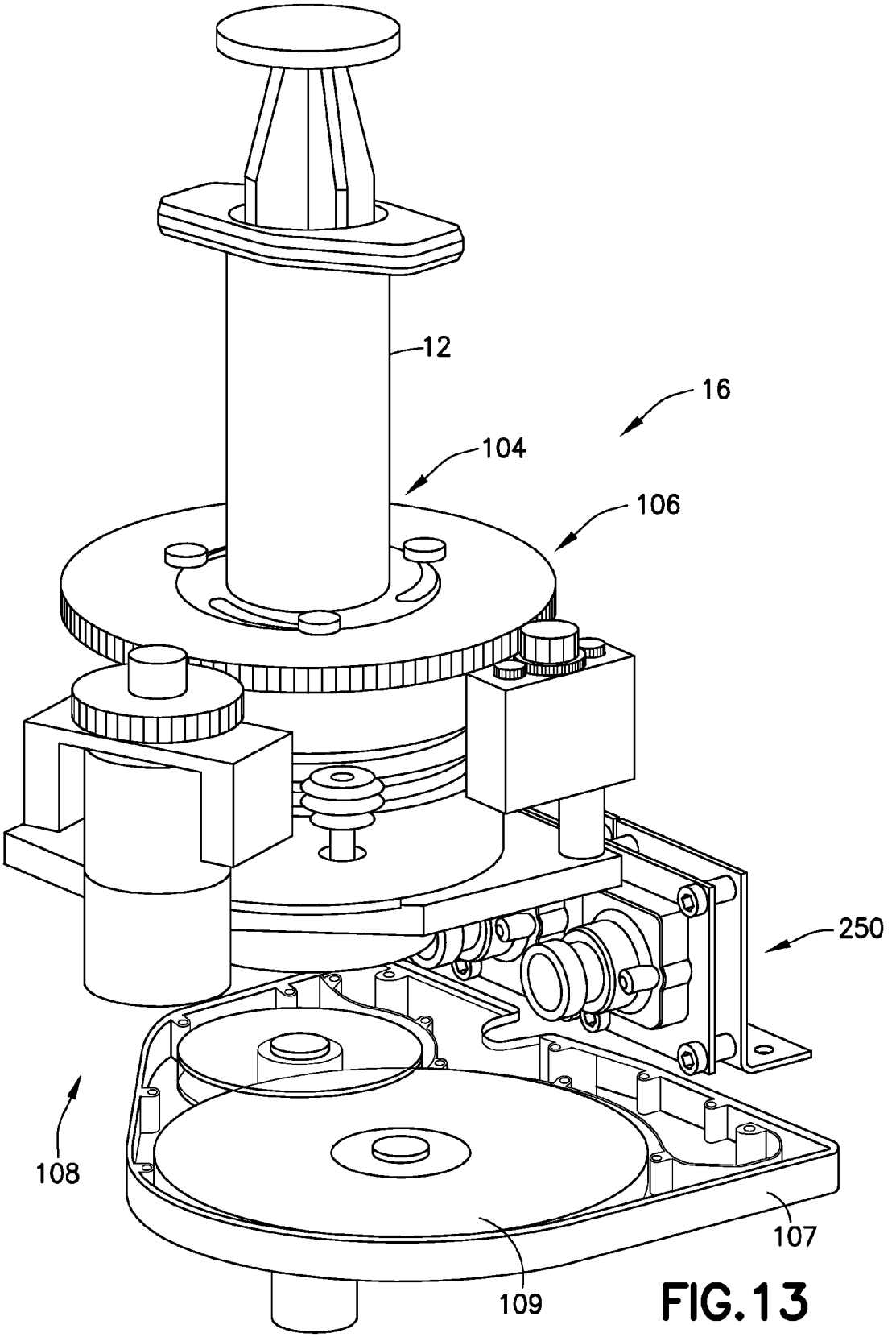

FIG. 13

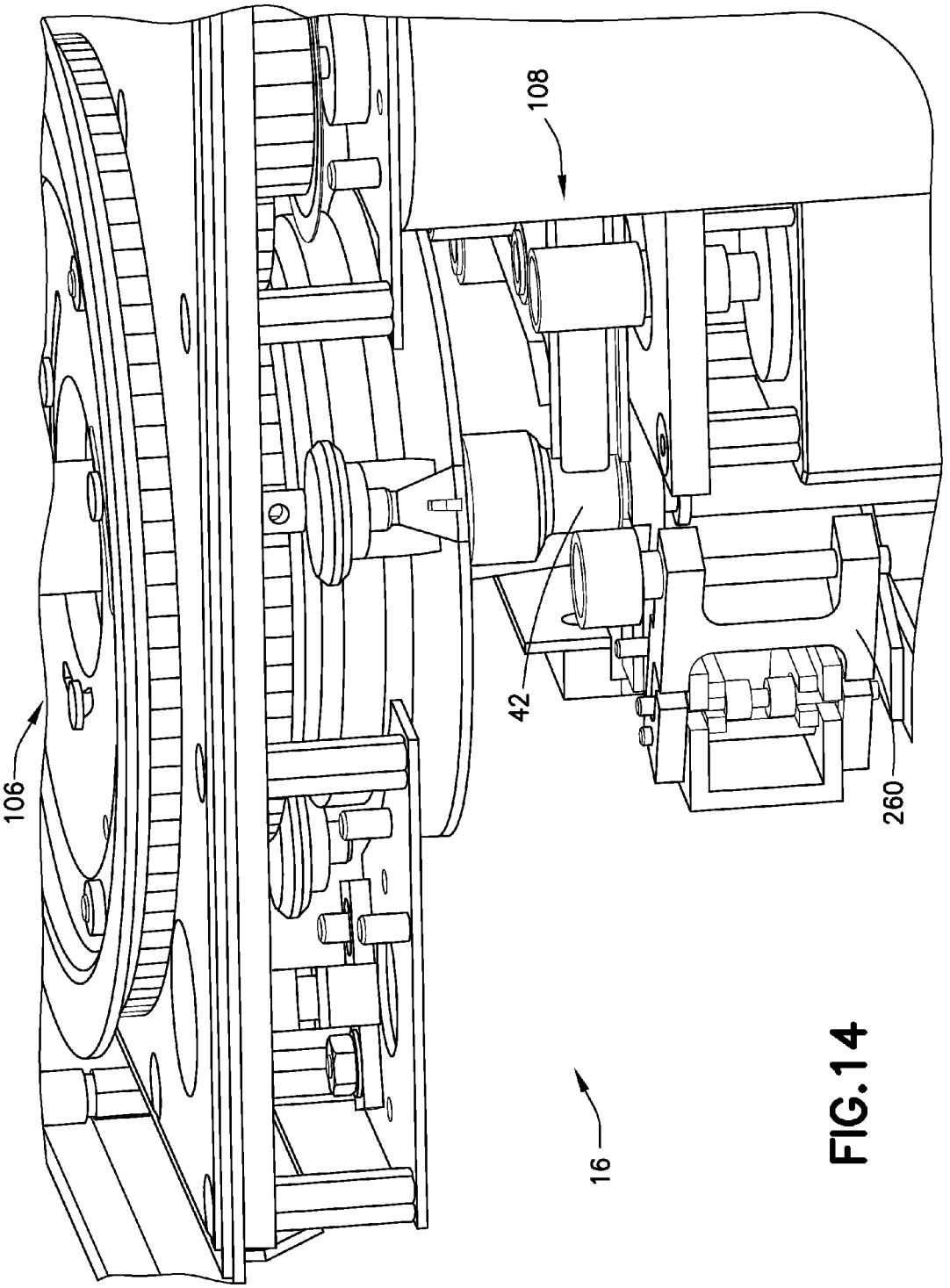

FIG. 14

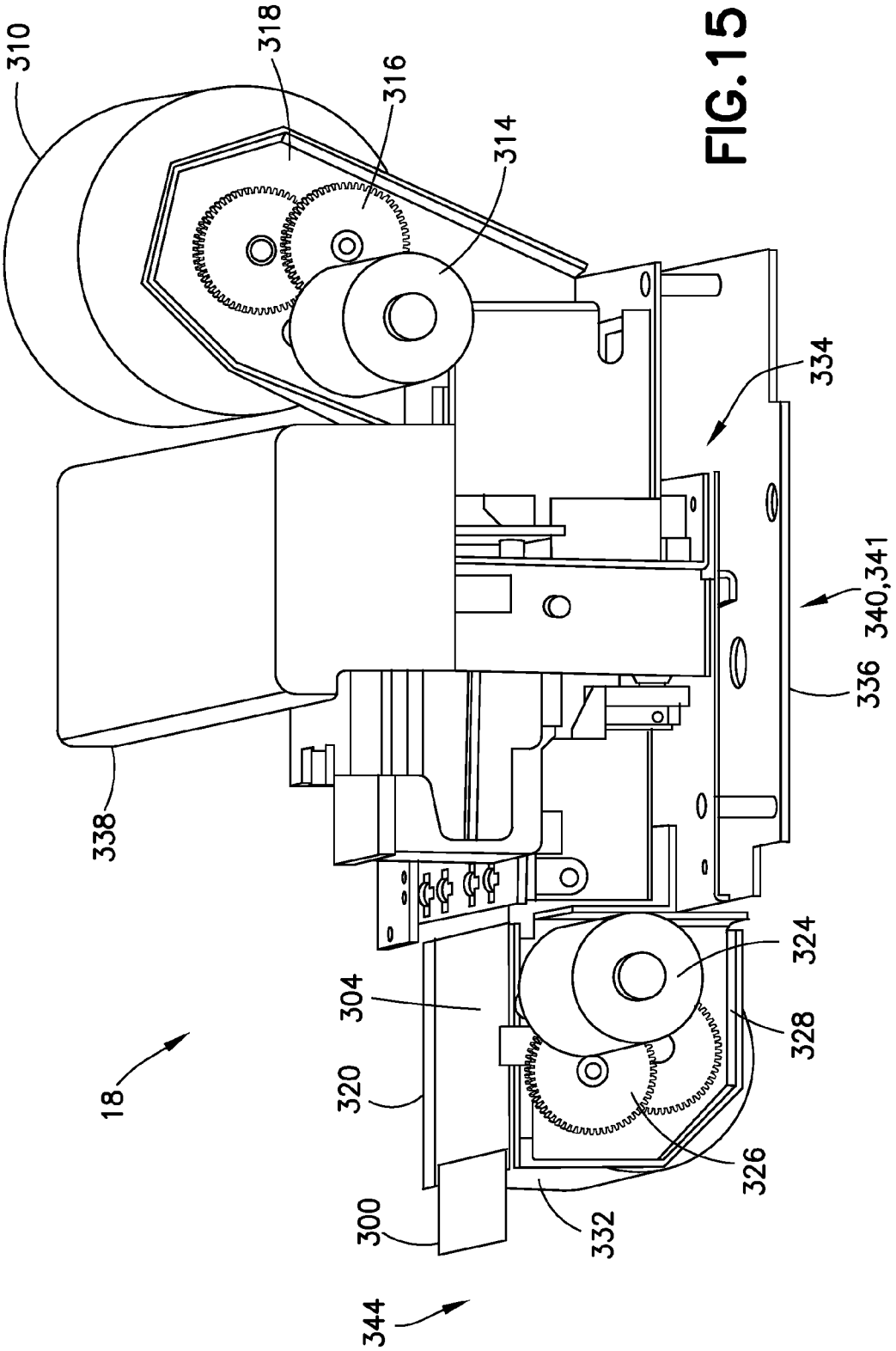
310
318
316
314
334
340,341
336
338
324
328
304
320
18
326
300
332
344

FIG.15

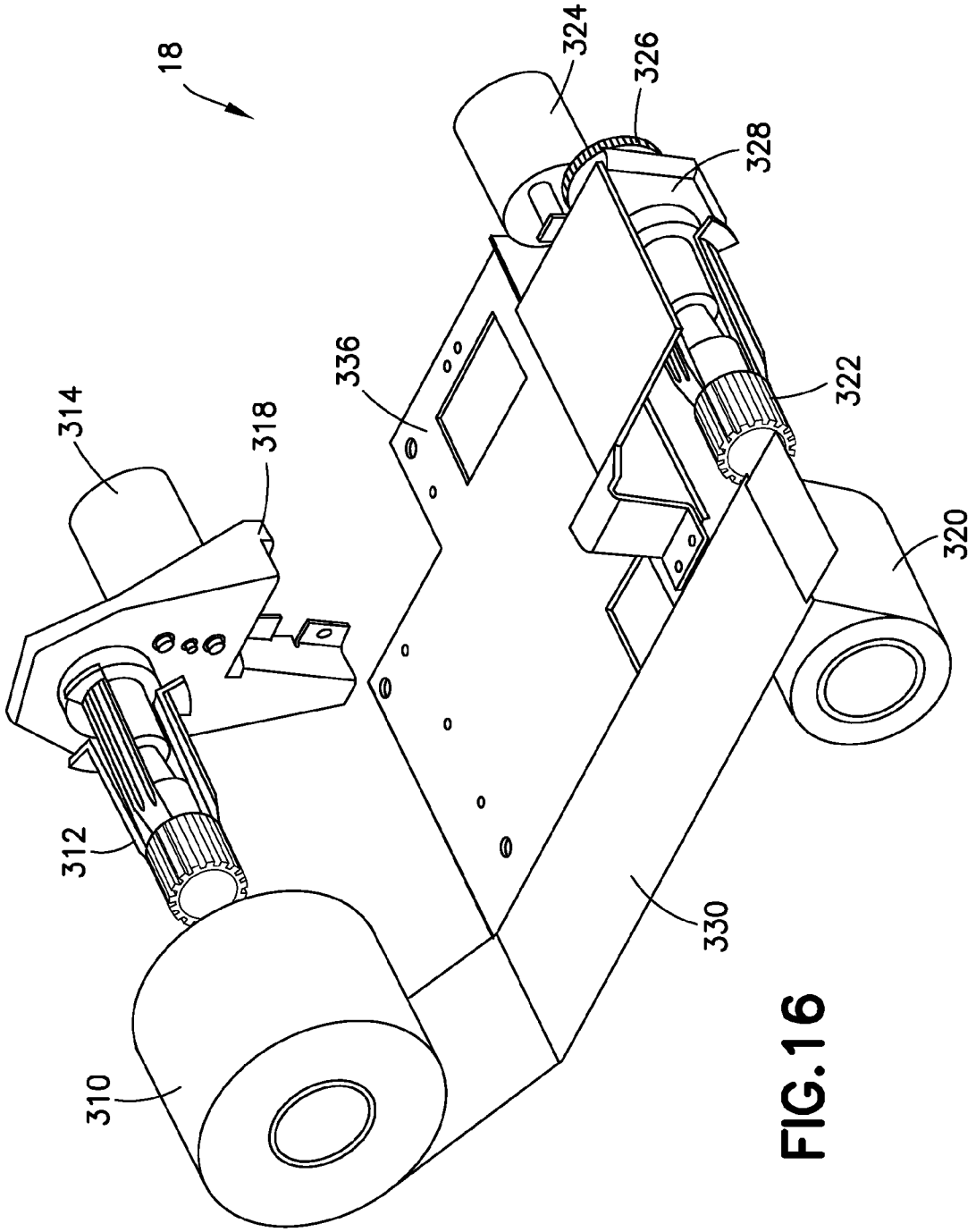

FIG. 16

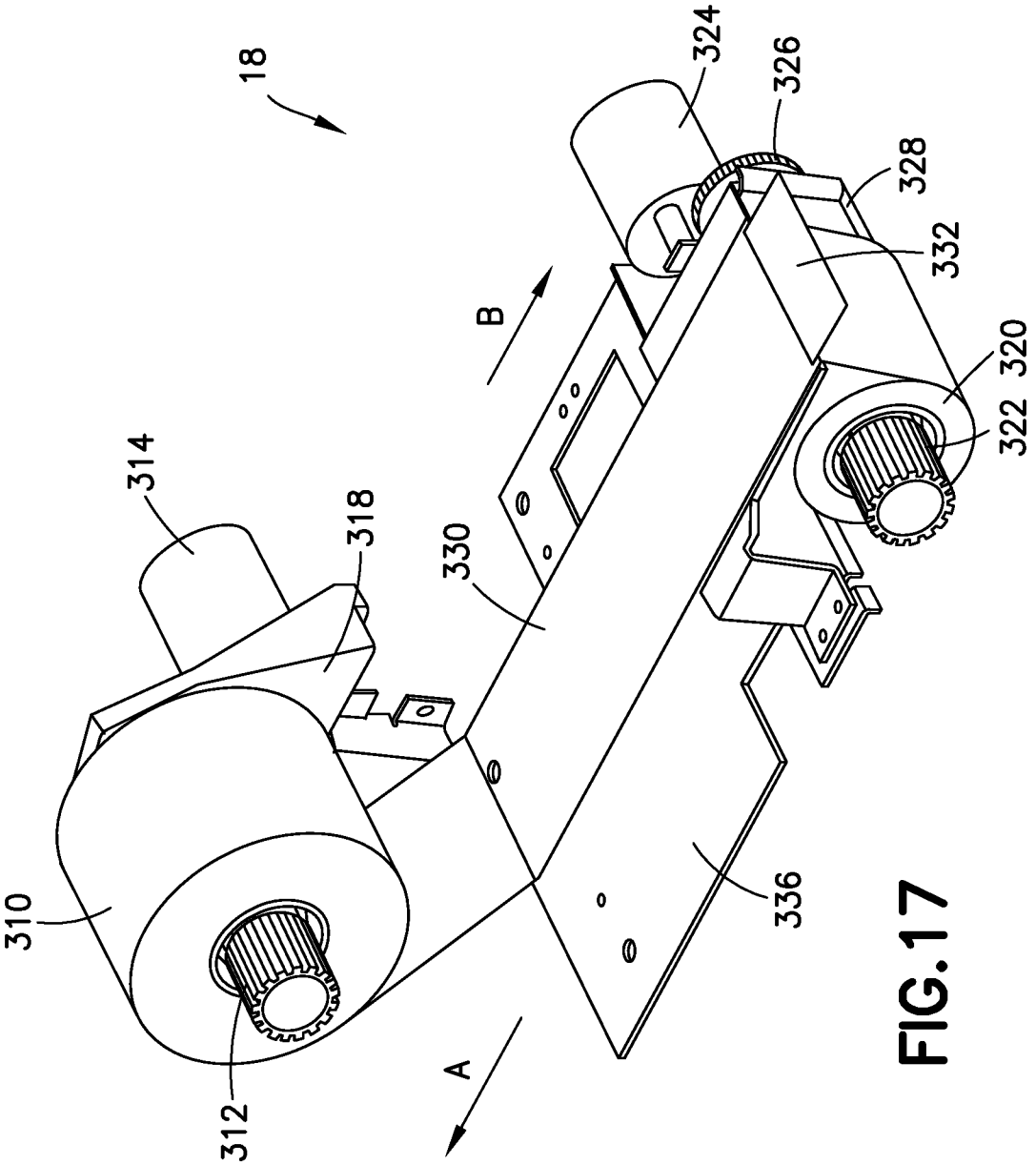

FIG.17

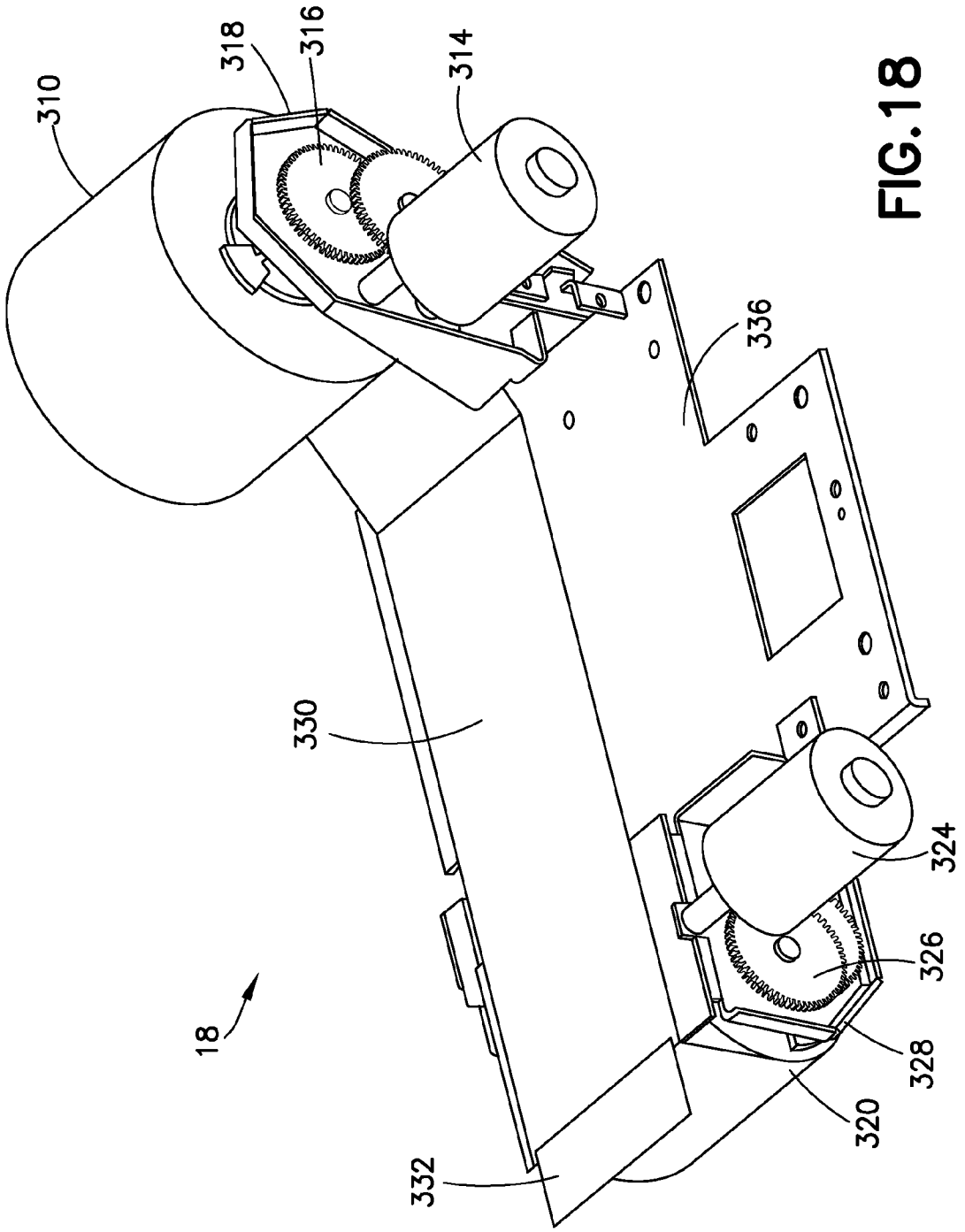

FIG.18

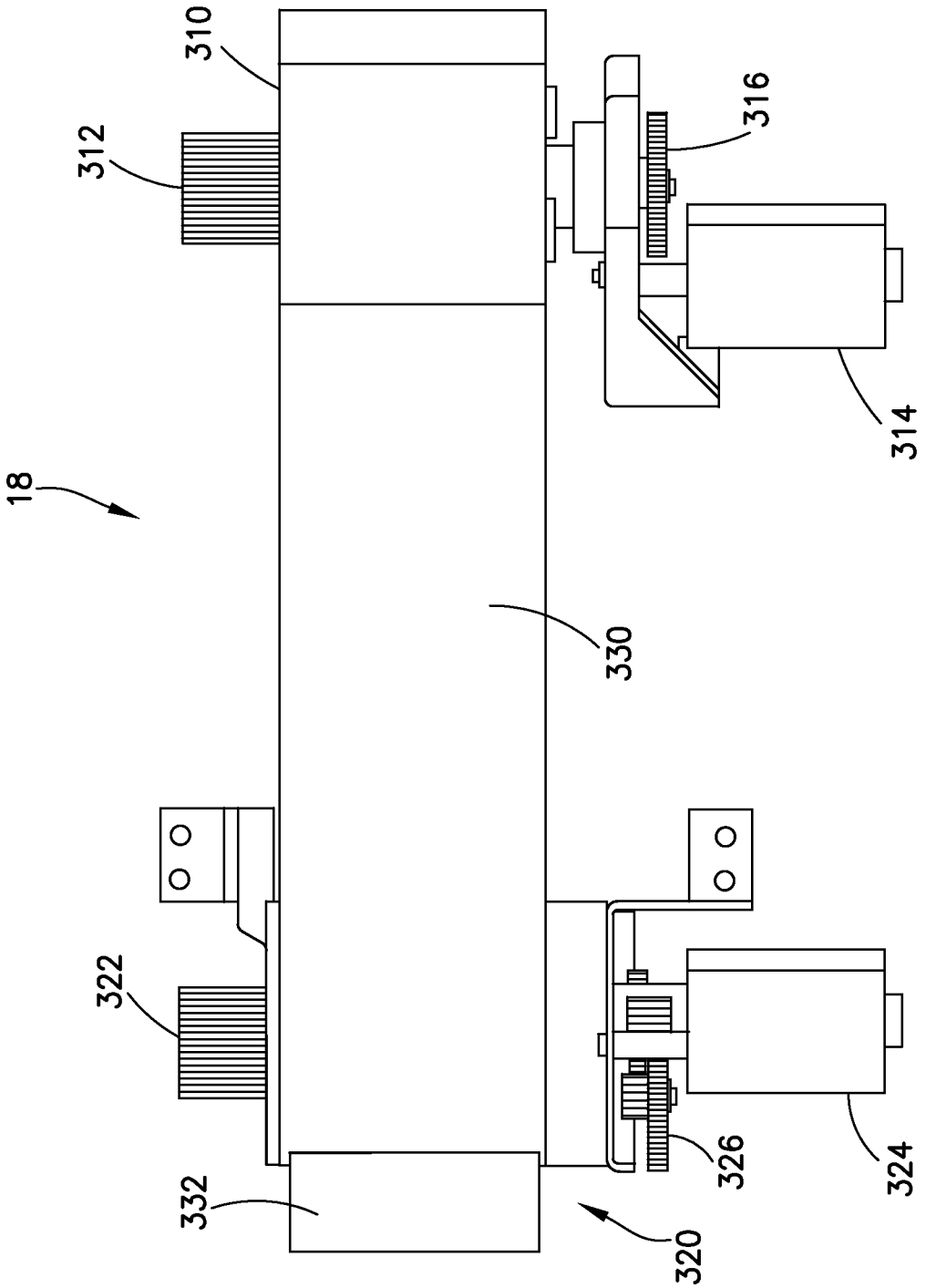

FIG.19

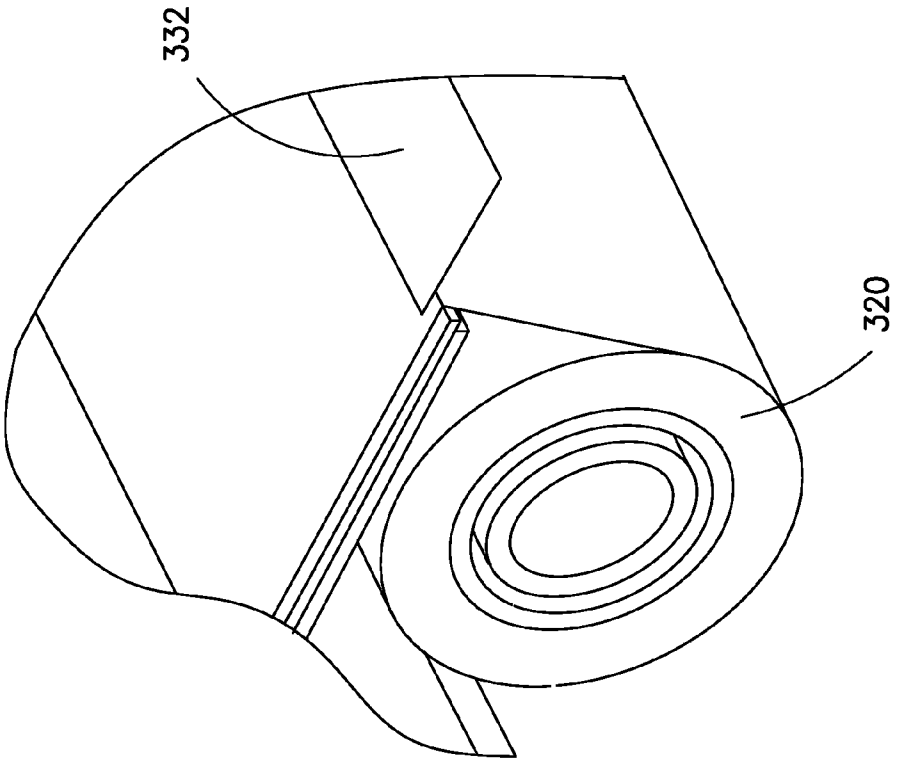

FIG.21

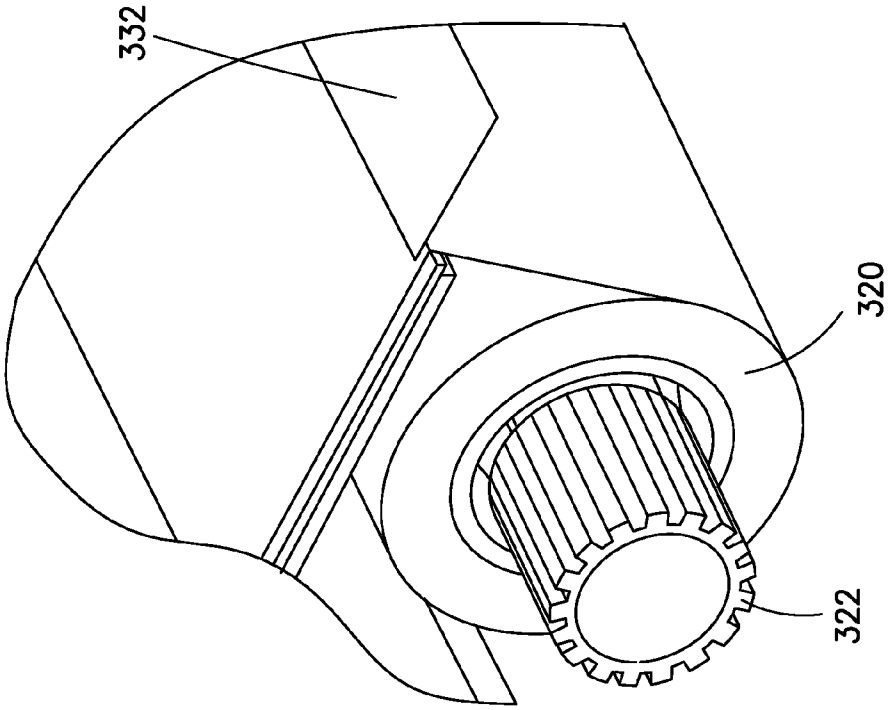

FIG.20

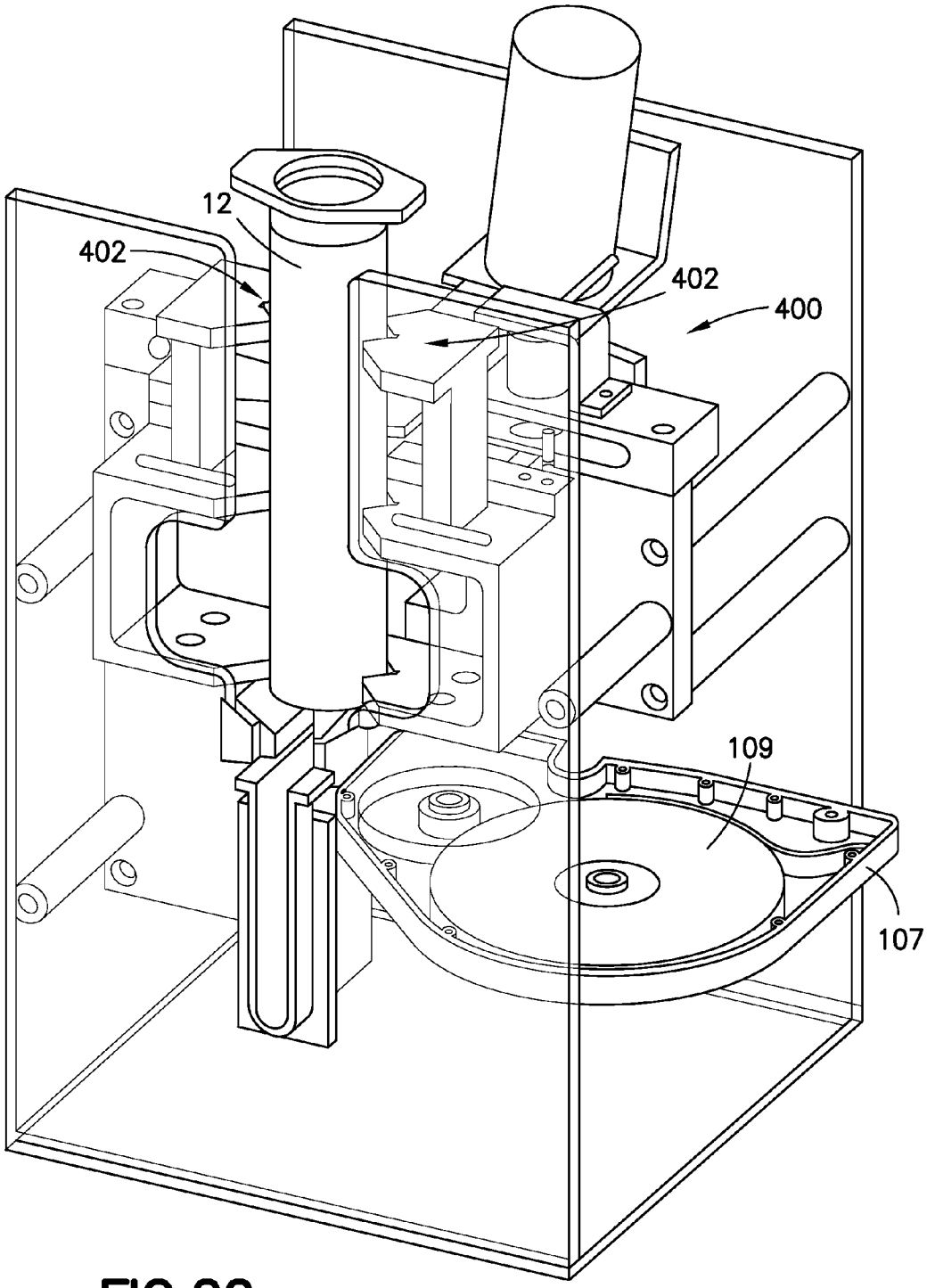

FIG.22

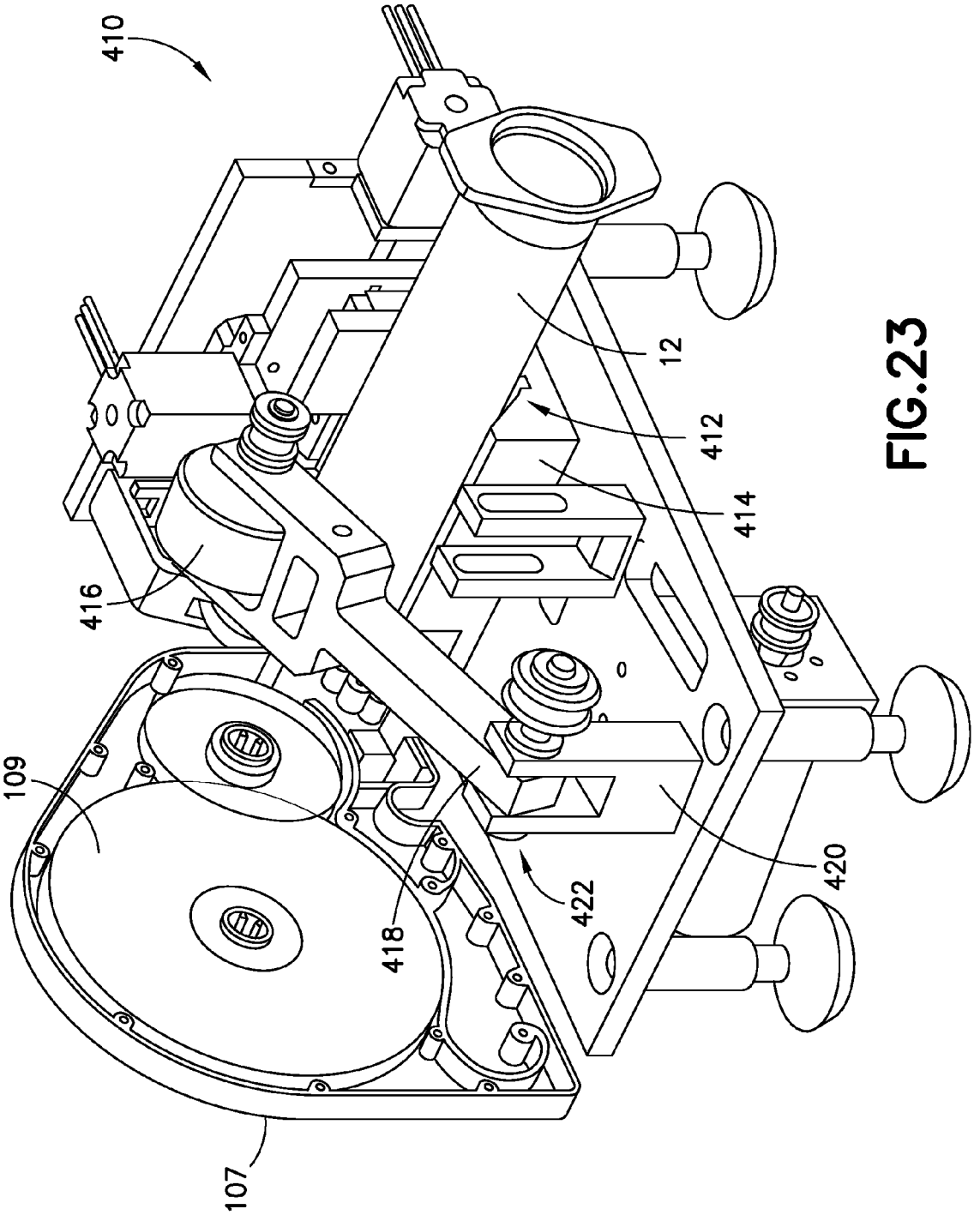

FIG.23

TENSIONING CONTROL DEVICE

CROSS-REFERENCE TO RELATED APPLICATION

The present application claims priority to U.S. Provisional Application Ser. No. 62/062,279, entitled "Tensioning Control Device", filed Oct. 10, 2014, the entire disclosure of which is hereby incorporated by reference.

BACKGROUND OF THE INVENTION

1. Field of the Disclosure

The present disclosure relates generally to a tensioning control device. More particularly, the present disclosure relates to a tensioning control device for a labeling device for a syringe.

2. Description of the Related Art

Syringes need to include information to help medical professionals identify the contents of the syringes. Errors such as giving an incorrect medication or an incorrect dose can easily be made if the contents of the syringe cannot be positively identified from the point of time that a medication is transferred to a syringe up to the moment of its administration.

The results of missed and unintended medication include adverse effects to patients and significant costs to the healthcare industry. Potential causes for these errors include unclear syringe contents due to unlabeled or poorly labeled syringes and poor record keeping of which drugs were administered and the concentration and quantity of the administered drug.

Identifying the content of a syringe based on the appearance of that content is unreliable. Visual identification of the medication is very difficult since several of the medications are identical or nearly identical in appearance.

SUMMARY OF THE INVENTION

The present disclosure provides a tensioning control device having a first motor that applies a torque to a first end of a substrate in a first direction and a second motor that applies a torque to a second end of the substrate in a second direction that is generally opposite the first direction. In this manner, the first motor and the second motor apply torque to the substrate in opposing directions, thereby placing the substrate in tension. In one embodiment, the first motor applies a torque to the first end of the substrate that is equal to the torque applied to the second end of the substrate by the second motor. By placing the substrate in tension in this manner, an actuator is able to incrementally move the substrate in a forward direction and a backward direction independent of the tension applied to the substrate.

In accordance with an embodiment of the present invention, a tensioning control device includes a substrate having a first end and an opposing second end; a first motor applying a first torque to the first end of the substrate in a first direction; and a second motor applying a second torque to the second end of the substrate in a second direction, the second direction generally opposite the first direction thereby placing the substrate in tension.

In one configuration, the first torque applied to the first end of the substrate is equal to the second torque applied to the second end of the substrate. In another configuration, the tensioning control device further includes an actuator adapted to move the substrate in a forward direction and a backward direction. In yet another configuration, the actuator is adapted to move the substrate in the forward direction and the backward direction independent of the tension applied to the substrate. In one configuration, the actuator is adapted to incrementally move the substrate. In another configuration, the actuator is a printing mechanism. In yet another configuration, the substrate is a material adapted to receive information for a label for a syringe.

In accordance with another embodiment of the present invention, a tensioning control device includes a substrate having a first end and an opposing second end; a first motor applying a first torque to the first end of the substrate in a first direction; a second motor applying a second torque to the second end of the substrate in a second direction, the second direction generally opposite the first direction thereby placing the substrate in tension; and an actuator adapted to move the substrate in a forward direction and a backward direction independent of the tension applied to the substrate.

In one configuration, the first torque applied to the first end of the substrate is equal to the second torque applied to the second end of the substrate. In another configuration, the actuator is adapted to incrementally move the substrate. In yet another configuration, the actuator is a printing mechanism. In one configuration, the substrate is a material adapted to receive information for a label for a syringe.

In accordance with another embodiment of the present invention, a labeling subsystem for a labeling device for a syringe includes a material adapted to receive information for a label for the syringe, the material having a first end and an opposing second end; a first motor applying a first torque to the first end of the material in a first direction; a second motor applying a second torque to the second end of the material in a second direction, the second direction generally opposite the first direction thereby placing the material in tension; and an actuator adapted to move the material in a forward direction and a backward direction independent of the tension applied to the material.

In one configuration, the labeling subsystem further includes a printer adapted to print the information on the material. In another configuration, the labeling subsystem further includes a removal device adapted to automatically remove a backing material from the material. In yet another configuration, the first torque applied to the first end of the material is equal to the second torque applied to the second end of the material. In one configuration, the actuator is adapted to incrementally move the material. In another configuration, the actuator is a printing mechanism.

BRIEF DESCRIPTION OF THE DRAWINGS

The above-mentioned and other features and advantages of this disclosure, and the manner of attaining them, will become more apparent and the disclosure itself will be better understood by reference to the following descriptions of embodiments of the disclosure taken in conjunction with the accompanying drawings, wherein:

FIG. **1** is a perspective view of a labeling device with a top door and a side door in an open position in accordance with an embodiment of the present invention.

FIG. **2**A is a perspective view of a syringe with a needle attached to the syringe and a protective cap covering the needle in accordance with an embodiment of the present invention.

FIG. **2**B is a cross-sectional view of a syringe barrel, stopper, and plunger rod of a syringe in accordance with an embodiment of the present invention.

FIG. **2**C is a perspective view of a syringe having a first label including machine readable information and a second label having human readable information in accordance with an embodiment of the present invention.

FIG. **3** is an exploded, perspective view of a syringe clamp assembly in accordance with an embodiment of the present invention.

FIG. **4** is an assembled, perspective view of a syringe clamp assembly with gripping components in an open position in accordance with an embodiment of the present invention.

FIG. **5** is an assembled, perspective view of a syringe clamp assembly with gripping components in a closed position in accordance with an embodiment of the present invention.

FIG. **6**A is a top, perspective view of a syringe clamp assembly with gripping components in an open position, with a syringe positioned within the syringe clamp assembly in accordance with an embodiment of the present invention.

FIG. **6**B is a top, perspective view of a syringe clamp assembly with gripping components in a partially closed position, with a syringe positioned within the syringe clamp assembly in accordance with an embodiment of the present invention.

FIG. **7** is a cross-sectional view of a syringe clamp assembly in accordance with an embodiment of the present invention.

FIG. **8** is a top, perspective view of a syringe clamp assembly with gripping components in a closed position, with a syringe secured within the syringe clamp assembly in accordance with an embodiment of the present invention.

FIG. **9** is an exploded, perspective view of a label print and apply assembly in accordance with an embodiment of the present invention.

FIG. **10** is a detailed, fragmentary perspective view of a portion of the label print and apply assembly of FIG. **9** in accordance with an embodiment of the present invention.

FIG. **11** is a perspective view of a pinch roller mechanism in accordance with an embodiment of the present invention.

FIG. **12** is a perspective view of an optical syringe alignment unit in accordance with an embodiment of the present invention.

FIG. **13** is a perspective view of a first labeling subsystem, with a syringe secured within the first labeling subsystem for the automatic application of a first label to the syringe in accordance with an embodiment of the present invention.

FIG. **14** is a detailed, fragmentary perspective view of a portion of a first labeling subsystem, with a syringe secured within the first labeling subsystem for the automatic application of a first label to the syringe in accordance with an embodiment of the present invention.

FIG. **15** is a perspective view of a second labeling subsystem in accordance with an embodiment of the present invention.

FIG. **16** is an exploded, perspective view of a second labeling subsystem in accordance with an embodiment of the present invention.

FIG. **17** is a first assembled, perspective view of a second labeling subsystem in accordance with an embodiment of the present invention.

FIG. **18** is a second assembled, perspective view of a second labeling subsystem in accordance with an embodiment of the present invention.

FIG. **19** is a top assembled, perspective view of a second labeling subsystem in accordance with an embodiment of the present invention.

FIG. **20** is a first detailed, perspective view of a removal device of a second labeling subsystem in accordance with an embodiment of the present invention.

FIG. **21** is a second detailed, perspective view of a removal device of a second labeling subsystem in accordance with an embodiment of the present invention.

FIG. **22** is a perspective view of a first labeling subsystem, with a syringe secured within the first labeling subsystem for the automatic application of a first label to the syringe in accordance with another embodiment of the present invention.

FIG. **23** is a perspective view of a first labeling subsystem, with a syringe secured within the first labeling subsystem for the automatic application of a first label to the syringe in accordance with another embodiment of the present invention.

Corresponding reference characters indicate corresponding parts throughout the several views. The exemplifications set out herein illustrate exemplary embodiments of the disclosure, and such exemplifications are not to be construed as limiting the scope of the disclosure in any manner.

DETAILED DESCRIPTION

The following description is provided to enable those skilled in the art to make and use the described embodiments contemplated for carrying out the invention. Various modifications, equivalents, variations, and alternatives, however, will remain readily apparent to those skilled in the art. Any and all such modifications, variations, equivalents, and alternatives are intended to fall within the spirit and scope of the present invention.

For purposes of the description hereinafter, the terms "upper", "lower", "right", "left", "vertical", "horizontal", "top", "bottom", "lateral", "longitudinal", and derivatives thereof shall relate to the invention as it is oriented in the drawing figures. However, it is to be understood that the invention may assume various alternative variations, except where expressly specified to the contrary. It is also to be understood that the specific devices illustrated in the attached drawings, and described in the following specification, are simply exemplary embodiments of the invention. Hence, specific dimensions and other physical characteristics related to the embodiments disclosed herein are not to be considered as limiting.

FIGS. **1-21** illustrate an exemplary embodiment of the present disclosure. Referring to FIGS. **1-21**, a labeling device **10** for a syringe **12** includes a housing **14**, a first labeling subsystem **16**, a tensioning control device or second labeling subsystem **18**, a scanner **20**, and a touchscreen interface **22** as will be described in more detail below. Labeling device **10** provides an encoded syringe labeler for the labeling of syringes in a medical setting such as an operating room, pharmacy, or perioperative space of a hospital.

Labeling device **10** is compatible with a plurality of different syringes. For example, labeling device **10** is compatible with any syringe available from Becton, Dickinson and Company of Franklin Lakes, N.J. In one embodiment, labeling device **10** is compatible with any luer lock syringe available from Becton, Dickinson and Company of Franklin Lakes, N.J.

Referring to FIGS. **2**A and **2**B, in one embodiment, syringe **12** includes a syringe barrel **24**, a plunger rod **26**, a stopper **28**, a needle **44**, and a protective cap **46**. Syringe **12** may be adapted for the dispensing and delivery of a fluid and/or collection of a fluid. For example, syringe **12** may be

used for injection or infusion of fluid such as a medication into a patient. Syringe **12** is contemplated for use in connection with a needle, such as by connecting syringe **12** to a separate needle assembly such as needle **44**, or alternatively for connection with an intravenous (IV) connection assembly (not shown). It can be appreciated that the present disclosure can be used with any type of syringe assembly.

Referring to FIGS. **2**A and **2**B, syringe barrel **24** generally includes a barrel body or sidewall **30** extending between a first or distal end **32** and a second or proximal end **34**. Sidewall **30** defines an elongate aperture or interior chamber **36** of syringe barrel **24**. In one embodiment, interior chamber **36** may span the extent of syringe barrel **24** so that syringe barrel **24** is cannulated along its entire length. In one embodiment, syringe barrel **24** may be in the general form of an elongated cylindrical barrel as is known in the art in the general shape of a hypodermic syringe. In alternative embodiments, syringe barrel **24** may be in other forms for containing a fluid for delivery, such as in the general form of an elongated rectangular barrel, for example. Syringe barrel **24** may be formed of glass, or may be injection molded from thermoplastic material such as polypropylene and polyethylene according to techniques known to those of ordinary skill in the art, though it is to be appreciated that syringe barrel **24** may be made from other suitable materials and according to other applicable techniques. In certain configurations, syringe barrel **24** may include an outwardly extending flange **40** about at least a portion of proximal end **34**. Flange **40** may be configured for easy grasping by a medical practitioner.

Distal end **32** of syringe barrel **24** includes an outlet opening **38** which is in fluid communication with chamber **36**. Outlet opening **38** may be sized and adapted for engagement with a separate device, such as a needle assembly or IV connection assembly and, therefore, may include a mechanism for such engagement as is conventionally known. In one embodiment, distal end **32** may include a generally-tapered luer tip **42** for engagement with an optional separate tapered luer structure of such a separate device for attachment therewith such as needle **44**. In one configuration, both the tapered luer tip **42** and the separate tapered luer structure may be provided with syringe **12**. In such a configuration, the separate tapered luer structure may be fitted with an attachment mechanism, such as a threaded engagement, for corresponding engagement with a separate device such as needle **44**. In another configuration, tapered luer tip **42** may be provided for direct engagement with a separate device such as needle **44**. In one embodiment, needle **44** includes a needle hub **48** for engagement to distal end **32** of syringe barrel **24**. In addition, a mechanism for locking engagement therebetween may also be provided with at least one of tapered luer tip **42** and/or the separate tapered luer structure, such as a luer collar or luer lock including interior threads. Such luer connections and luer locking mechanisms are well known in the art.

Proximal end **34** of syringe barrel **24** is generally open-ended, but is intended to be closed off to the external environment as discussed herein. Syringe barrel **24** may also include markings, such as graduations located on sidewall **30**, for providing an indication as to the level or amount of fluid contained within interior chamber **36** of syringe barrel **24**. Such markings may be provided on an external surface of sidewall **30**, an internal surface of sidewall **30**, or integrally formed or otherwise within sidewall **30** of syringe barrel **24**. In other embodiments, alternatively, or in addition thereto, the markings may also provide a description of the contents of the syringe or other identifying information as may be known in the art, such as maximum and/or minimum fill lines.

In some embodiments, syringe **12** may be useful as a pre-filled syringe, and, therefore, may be provided for end use with a fluid, such as a medication or drug, contained within interior chamber **36** of syringe barrel **24**, pre-filled by the manufacturer. In this manner, syringe **12** can be manufactured, pre-filled with a medication, sterilized, and packaged in appropriate packaging for delivery, storage, and use by the end user. In such embodiments, syringe **12** may include a sealing cap member disposed at distal end **32** of syringe barrel **24** to seal a fluid, such as a medication, within interior chamber **36** of syringe barrel **24**.

Referring to FIG. **2**B, syringe **12** includes stopper **28** which is moveably or slidably disposed within interior chamber **36**, and in sealing contact with the internal surface of sidewall **30** of syringe barrel **24**, thereby separating interior chamber **36** into a proximal chamber adjacent proximal end **34**, and a distal chamber adjacent distal end **32**. Stopper **28** is sized relative to syringe barrel **24** to provide sealing engagement with the interior surface of sidewall **30** of syringe barrel **24**. Additionally, stopper **28** may include one or more annular ribs extending around the periphery of stopper **28** to increase the sealing engagement between stopper **28** and the interior surface of sidewall **30** of syringe barrel **24**. In alternate embodiments, a singular O-ring or a plurality of O-rings may be circumferentially disposed about stopper **28** to increase the sealing engagement with the interior surface of sidewall **30**.

Referring to FIGS. **2**A and **2**B, syringe **12** further includes plunger rod **26** which provides a mechanism for dispensing fluid contained within interior chamber **36** of syringe barrel **24** through outlet opening **38** upon connection of plunger rod **26** to syringe barrel **24** via stopper **28**. Plunger rod **26** is adapted for advancing stopper **28**. In one embodiment, plunger rod **26** is sized for movement within interior chamber **36** of syringe barrel **24**.

Referring to FIG. **2**A, syringe barrel **24** includes a needle **44** attached. The needle **44** is used to fill the syringe barrel **24** with a medication from a separate container, such as a vial, prior to use. In one embodiment, needle **44** is a blunt needle. The protective cap **46** is attached to the syringe barrel **24** to surround and cover the needle **44** to prevent accidental needle stick injuries.

Labeling device **10** provides an encoded syringe labeler for the labeling of syringes in a medical setting such as an operating room, pharmacy, or perioperative space of a hospital. Referring to FIG. **1**, the labeling device **10** for a syringe **12** includes a housing **14**, a first labeling subsystem **16**, a tensioning control device or second labeling subsystem **18**, a scanner **20**, and a touchscreen interface **22**. The housing **14** of labeling device **10** generally includes a top portion **50**, a bottom portion **52**, a front portion **54**, a rear portion **56**, a first side portion **58**, and a second side portion **60**. The labeling device **10** includes a side door **62** located at first side portion **58**. In one embodiment, side door **62** may be connected to first side portion **58** of housing **14** by a hinged portion **64**. In this manner, side door **62** may be transitioned between a closed position and an open position as shown in FIG. **1**.

The labeling device **10** includes a top door **66** located at top portion **50**. In one embodiment, top door **66** may be connected to top portion **50** of housing **14** by a hinged portion **68**. In this manner, top door **66** may be transitioned between a closed position and an open position as shown in FIG. **1**.

The labeling device **10** includes a label slot or opening **76** located at front portion **54** of housing **14** of labeling device **10**. The label slot **76** provides an exit portion for a second label **300** having human readable information **302** as described in more detail below, and shown in FIG. **2**C.

In one embodiment, the scanner **20** is located on front portion **54** of housing **14** of labeling device **10**. The scanner **20** is adapted to scan a portion of a container having a medication therein to retrieve medication information for the medication contained in the container. For example, in one embodiment, the scanner **20** may scan a barcode located on a container having a medication therein. Upon scanning the container with the scanner **20**, the medication information about the medication contained in the container is processed by the labeling device **10**. For example, the labeling device **10** may refer to a database to process the medication information about the medication contained in the container. In one embodiment, the labeling device **10** may refer to a centralized database to process the medication information about the medication contained in the container. In another embodiment, the labeling device **10** may refer to a local database stored in the labeling device **10** to process the medication information about the medication contained in the container. A user may then select to analyze and/or modify this medication information using the onboard touchscreen interface **22**. Potential data fields requiring modification include drug concentration, combinations, and/or other medication identifying information. In one embodiment, the touchscreen interface **22** that is adapted to display the medication information is located on the front portion **54** of housing **14** of labeling device **10**.

Referring to FIG. **1**, housing **14** of labeling device **10** defines a first compartment **70** adapted to receive a first labeling subsystem **16** and a second compartment **72** adapted to receive a second labeling subsystem **18**. In one embodiment, housing **14** includes a divider wall **74** for separating the first compartment **70** and the second compartment **72**. The side door **62** may be moved to the open position as shown in FIG. **1** to install the first labeling subsystem **16** and the second labeling subsystem **18** in the labeling device **10**. Also, the side door **62** and the top door **66** allow for easy access to the interior of the housing **14** of the labeling device **10** for maintenance work.

Referring to FIGS. **3-14**, in one embodiment, a first labeling subsystem **16** is adapted to print a first label **100** including machine readable information **102** (FIG. **2**C) and includes a syringe receiving port **104**, a syringe clamp assembly **106**, and a label print and apply assembly **108**.

The machine readable information **102** conforms to all applicable standards regarding information contained on a label for a syringe. In one embodiment, the machine readable information **102** is a barcode. For example, the machine readable information **102** may be a unique barcode that is able to record and transmit information related to the syringe and the medication contained therein. Referring to FIG. **2**C, the labeling device **10** of the present disclosure provides a first label **100** having machine readable information **102** and a second label **300** having human readable information **302** for a syringe **12** so that a user and/or a machine can easily obtain the desired information regarding the syringe **12** and the contents therein.

Referring to FIGS. **1** and **8**, the syringe receiving port **104** is adapted to receive a syringe **12** therein for automatic application of a first label **100** to the syringe **12**. In one embodiment, the receiving port **104** is located at the top portion **50** of the housing **14** of the labeling device **10**. The top door **66** may be moved to the open position as shown in FIG. **1** to insert a syringe **12** within the receiving port **104**.

Referring to FIGS. **3-8** and **14**, the syringe clamp assembly **106** includes a holding element **110**, a drive gear **112**, an alignment disc **114**, a carrier component **116** having a gear **118**, a plurality of gripping components **120**, a retaining ring **122**, a stability ring **124**, and a syringe positioning and alignment component **126**. The syringe clamp assembly **106** securely holds the syringe **12** within the syringe receiving port **104** while the label print and apply assembly **108** automatically applies a first label **100** to the luer tip **42** of the syringe **12**.

The holding element **110** provides a gripping surface that allows a user to pick up the clamp assembly **106** without having to place their hand within the syringe receiving port **104**. In this manner, with the syringe **12** received within the receiving port **104**, a user can remove the syringe **12** and/or clamp assembly **106**, if needed, without having to place their hand within the syringe receiving port **104** and without having to touch the syringe **12**. In one embodiment, the holding element **110** includes a lip portion **130** that extends beyond the periphery of the other components of the clamp assembly **106**. In this manner, a user can grasp the holding element **110** at the lip portion **130** to remove the syringe **12** and/or clamp assembly **106**. In one embodiment, the outer diameter of the holding element **110** is greater than the outer diameter of the other components of the clamp assembly **106**. The holding element **110** includes a central aperture **132** adapted to receive the syringe **12** therethrough.

The drive gear **112** interfaces with a motor and is adapted to open and close the gripping components **120** that are adapted to grip the syringe **12** with the gripping components **120** in the closed position. The motor provides a drive mechanism to rotate the drive gear **112**. Additionally, the drive gear **112** is adapted to rotate the syringe **12** during the automatic application of the first label **100** to the syringe **12**. In one embodiment, the drive gear **112** includes teeth **134**, a first cam slot **136** adapted to receive a first cam post **138**, a second cam slot **140** adapted to receive a second cam post **142**, a third cam slot **144** adapted to receive a third cam post **146**, and a central aperture **148** adapted to receive the syringe **12** therethrough.

The alignment disc **114** is adapted to properly align and maintain the position of the components of the clamp assembly **106**. In one embodiment, the alignment disc **114** includes a superior surface **150**, an opposing inferior surface **152**, a plurality of retaining posts **154** extending from the inferior surface **152**, a bearing **156** disposed on each of the retaining posts **154**, and a central aperture **158** adapted to receive the syringe **12** therethrough. In one embodiment, the alignment disc **114** includes three retaining posts **154** each having a bearing **156** thereon.

The alignment disc **114** is adapted to allow the components of the clamp assembly **106** to rotate independently of each other so that the gripping components **120** can be opened and closed to grip the syringe **12** with the gripping components **120** in the closed position. Once the gripping components **120** are moved to the closed position to grip the syringe **12**, the components of the clamp assembly **106** are then capable of rotating together to rotate the syringe **12** during the automatic application of the first label **100** to the syringe **12**. In one embodiment, the syringe **12** is rotated during the automatic application of the first label **100** to the syringe **12** while the first label **100** remains in a stationary position.

The carrier component **116** includes a gear **118** extending around the periphery of the carrier component **116**, protrud-

ing walls **170** each defining a rod aperture **172**, and a central aperture **174** adapted to receive the syringe **12** therethrough. The carrier component **116** provides a carrier that the other components of the clamp assembly **106** can be secured to. In one embodiment, the carrier component **116** is formed of steel, although other materials of similar strength may be used. The components of the clamp assembly **106** can be secured to the carrier component **116** using methods known in the art. In one embodiment, any suitable fastener can be used to secure the components of the clamp assembly **106** to the carrier component **116** such as a bolt or a threaded fastener. The carrier component **116** includes protruding walls **170** that define rod apertures **172** therethrough. The protruding walls **170** extend from the carrier component **116** inward to the central aperture **174**. In one embodiment, the carrier component **116** includes three protruding walls **170** each defining a rod aperture **172**. The carrier component **116** also includes the central aperture **174** adapted to receive the syringe **12** therethrough.

The gripping components **120** are movable between an open position (FIG. **4**) and a closed position (FIGS. **5** and **8**). With the gripping components **120** in the closed position, the gripping components **120** contact and grip the syringe **12** to secure the syringe **12** within the syringe receiving port **104** of the first labeling subsystem **16** of the labeling device **10** as shown in FIG. **8**. Additionally, as the gripping components **120** move to the closed position to contact and grip the syringe **12**, the gripping components **120** also center the syringe **12** to the proper orientation within the clamp assembly **106** for the automatic application of the first label **100** to the syringe **12**. In one embodiment, the gripping component **120** includes a first jaw **160**, a second jaw **162**, and a third jaw **164** that each include a gripping surface **166**, a cam post receiving aperture **168**, and a rod receiving aperture **180**. In one embodiment, the first jaw **160**, the second jaw **162**, and the third jaw **164** each include a grip element **182** to contact and grip the syringe **12** to further secure the syringe **12** within the syringe receiving port **104** of the first labeling subsystem **16** of the labeling device **10** as shown in FIG. **8**.

In one embodiment, the gripping components **120** are adapted to securely hold any size of syringe **12** within the syringe receiving port **104** while the label print and apply assembly **108** automatically applies a first label **100** to the luer tip **42** of the syringe **12**. In other embodiments, the gripping components **120** are adapted to securely hold a syringe **12** having any size from 1 mL to 60 mL within the syringe receiving port **104** while the label print and apply assembly **108** automatically applies a first label **100** to the luer tip **42** of the syringe **12**.

The retaining ring **122** includes a superior surface **186**, an opposing inferior surface **188**, a plurality of posts **190** extending from the inferior surface **188** and each defining a rod receiving aperture **192**, and a central aperture **194** adapted to receive the syringe **12** therethrough.

Referring to FIGS. **3-8**, the assembly of the syringe clamp assembly **106** of the first labeling subsystem **16** of labeling device **10** will now be described. The gripping components **120** are movable between an open position (FIG. **4**) and a closed position (FIGS. **5** and **8**). The gripping components **120** are pivotably connected to the carrier component **116** and retaining ring **122** so that the gripping components **120** are movable between the open position and the closed position. In one embodiment, connecting rods **196** are used to pivotably connect the gripping components **120** to the carrier component **116** and retaining ring **122**. Referring to FIG. **3**, the respective rod apertures **172** of the carrier component **116** are aligned with the rod receiving apertures **180** of the respective jaws **160**, **162**, **164** and the respective rod receiving apertures **192** of the retaining ring **122**. In this manner, connecting rods **196** can be positioned through the rod apertures **172** of the carrier component **116** and through the rod receiving apertures **180** of the respective jaws **160**, **162**, **164** and through the respective rod receiving apertures **192** of the retaining ring **122** to pivotably connect the jaws **160**, **162**, **164** to the carrier component **116** and retaining ring **122**. In this manner, the jaws **160**, **162**, **164** are pivotably connected to the carrier component **116** and retaining ring **122** so that the jaws **160**, **162**, **164** are movable between the open position and the closed position.

Movement of the jaws **160**, **162**, **164** between the open position and the closed position is controlled by a movable cam connection between the jaws **160**, **162**, **164** and the drive gear **112**. In one embodiment, the respective cam slots **136**, **140**, **144** of the drive gear **112** are aligned with the cam post receiving apertures **168** of the respective jaws **160**, **162**, **164**. In this manner, cam posts **138**, **142**, **146** can be positioned through the respective cam slots **136**, **140**, **144** of the drive gear **112** and through the cam post receiving apertures **168** of the respective jaws **160**, **162**, **164** to movably connect the jaws **160**, **162**, **164** to the drive gear **112**. In this manner, the drive gear **112** controls movement of the jaws **160**, **162**, **164** between the open position and the closed position.

In one embodiment, the first cam slot **136**, the second cam slot **140**, and the third cam slot **144** are positioned off-center so that rotation of the drive gear **112** with the carrier component **116** in a stationary position moves the jaws **160**, **162**, **164** between the open position and the closed position via the sliding movement of the cam posts **138**, **142**, **146** within the off-center cam slots **136**, **140**, **144**.

Referring to FIG. **3**, in one embodiment, the first labeling subsystem **16** includes a stability ring **124** and a syringe positioning and alignment component **126**. The stability ring **124** includes bent tabs **197** each defining an aperture **198** and a central aperture **199** adapted to receive the syringe **12** therethrough. In one embodiment, the stability ring **124** includes three bent tabs **197**. The stability ring **124** is connected to the alignment disc **114**. For example, in one embodiment, the retaining posts **154** of the alignment disc **114** are connected to a respective bent tab **197** through apertures **198**. In one embodiment, the retaining posts **154** are threadingly connected to the respective bent tabs **197** of the stability ring **124**. In this manner, the stability ring **124** provides stability to the components of the first labeling subsystem **16**.

The syringe alignment component **126** is removably connected to the stability ring **124**. The syringe alignment component **126** includes flexible arms **127**, a wall **128** that extends downwardly from the syringe alignment component **126**, a luer tip receiving portion **129**, an alignment area **131**, and a central aperture **133** adapted to receive the luer tip **42** of the syringe **12** therethrough. In one embodiment, the syringe alignment component **126** is removably connected to the stability ring **124** via a snap fit engagement. For example, the flexible arms **127** can be used to snap fit the syringe alignment component **126** to the stability ring **124**. The flexible arms **127** can be deformed to an open position so that the syringe alignment component **126** can be removed from the stability ring **124**. With the syringe **12** positioned within the syringe receiving port **104**, the luer tip **42** of the syringe **12** extends beyond the central aperture **133** to the luer tip receiving portion **129** within the alignment area **131**. In this manner, the luer tip **42** of the syringe **12** is properly positioned within the first labeling subsystem **16** so

that an optical syringe alignment unit **250** (FIG. **12**) can determine the precise position of the luer tip **42** of the syringe **12** for automatic application of the first label **100** to the luer tip **42** of the syringe **12** as discussed below.

A syringe clamp assembly of the first labeling subsystem **16** may include other embodiments to securely hold a syringe **12** within the syringe receiving port **104** while the label print and apply assembly **108** automatically applies a first label **100** to the luer tip **42** of the syringe **12**.

Referring to FIG. **22**, in another embodiment, a syringe clamp assembly **400** includes an opposing V-shaped clamp assembly. In this embodiment, a syringe **12** is placed between two spring loaded V-shaped jaws **402**. Once the syringe **12** is properly placed within the jaws **402**, an electromagnet would activate, locking the jaws **402** in a closed position to securely hold a syringe **12** within the syringe clamp assembly **400** while the label print and apply assembly **108** automatically applies a first label **100** to the luer tip **42** of the syringe **12**. A roller would then make contact with the syringe **12**, rotating it about its axis. The roller would be orientated at an angle to the rotation, forcing the syringe **12** to move axially until the luer tip **42** of the syringe **12** rested against a reference surface. Once the luer tip **42** of the syringe **12** was in position, the label print and apply assembly **108** would automatically apply a first label **100** to the luer tip **42** of the rotating syringe **12**.

Referring to FIG. **23**, in another embodiment, a syringe clamp assembly **410** includes an oblique roller clamp assembly. In this embodiment, a syringe **12** is placed in a V-shaped groove **412** of a syringe holding component **414** and a roller **416** rotatably connected to an arm **418** would be lowered until it contacted the syringe **12** and made the syringe **12** rotate about its axis. In this embodiment, the arm **418** is movably connected to a base portion **420** via a pin connection **422** at the base portion **420**. The roller **416** would be orientated at an angle to the rotation, forcing the syringe **12** to move axially until the luer tip **42** of the syringe **12** rested against a reference surface. Simultaneously, the entire mechanism would move in a manner such that the outer radius of the luer tip **42** of the syringe **12** would be tangent to the tip of the label application mechanism. Once the luer tip **42** of the syringe **12** was in position, the label print and apply assembly **108** would automatically apply a first label **100** to the luer tip **42** of the rotating syringe **12**.

In another embodiment, a syringe clamp assembly of the present disclosure includes a cap clamp assembly. In this embodiment, the cap clamp assembly utilizes a collet to grab a syringe cap and pull it against a datum surface for axial registration. The cap clamp assembly would also rotate the syringe **12** similar to the opposing V-shaped clamp assembly and the oblique roller clamp assembly for automatic application of a first label **100** to the luer tip **42** of the rotating syringe **12**.

Referring to FIGS. **9-14**, the label print and apply assembly **108** includes a first label print assembly **200** and a label apply assembly **202**. The first label print assembly **200** of the label print and apply assembly **108** is activated during the printing of a first label **100** and the label apply assembly **202** of the label print and apply assembly **108** is activated during the automatic application of the first label **100** to a syringe **12**. The label print and apply assembly **108** includes the first label print assembly **200**, the label apply assembly **202**, a sensor component **210**, a print and apply state controller **218**, a first printer device **229** having a label printer head **230**, a mounting plate **232**, a first motor **234**, a second motor **236**, a third motor **238**, a fourth motor **240**, an optical syringe alignment unit **250**, and a pinch roller mechanism **260**. In one embodiment, the first printer device **229** allows for thermal printing of the first label **100** for the luer tip **42** of the syringe **12**.

The label print and apply assembly **108** includes a sensor component **210** having a sensor arm **212** that is used as a photo interrupter and a cam element **214**. The sensor component **210** is rotatable between a first position and a second position. In one embodiment, the sensor component **210** interfaces with a motor. The motor provides a drive mechanism to rotate the sensor component **210** between the first position and the second position. In one embodiment, with the sensor component **210** rotated to the second position, the sensor arm **212** breaks an optical beam. In this manner, the position of the sensor component **210** is determined and the label print and apply assembly **108** can be activated in accordance with the position of the sensor component **210**. In one embodiment, rotation of the sensor component **210** moves the cam element **214** between a first position and a second position.

The label print and apply assembly **108** includes a print and apply state controller **218** that activates the first label print assembly **200** to print a first label **100** and activates the label apply assembly **202** to automatically apply the first label **100** to a syringe **12**. In one embodiment, the print and apply state controller **218** includes a first flipper arm **220** and a second flipper arm **222** which are spring loaded. In one embodiment, the first flipper arm **220** and the second flipper arm **222** are spring loaded by a spring **224**. The first flipper arm **220** and the second flipper arm **222** are movable between a first position, in which the first label print assembly **200** is activated to print a first label **100**, and a second position, in which the label apply assembly **202** is activated to automatically apply the first label **100** to a syringe **12**. In one embodiment, the first flipper arm **220** and the second flipper arm **222** interface with the cam element **214**. Thus, rotation of the cam element **214** between a first position and a second position moves the first flipper arm **220** and the second flipper arm **222** between the first position and the second position.

The first flipper arm **220** and the second flipper arm **222** control pressure rollers on the label path that allow the first label **100** to be printed via the first label print assembly **200** or applied via the label apply assembly **202**. For example, in one embodiment, with the first flipper arm **220** and the second flipper arm **222** in a first position, the flipper arms **220**, **222** control a first pressure roller to force a cartridge, spool, or reel containing a label up against a label printer head **230** and feeds the label through the label printer head **230** for the printing of machine readable information on a first label **100**. Referring to FIG. **13**, in one embodiment, label material **109** for the printing of machine readable information **102** thereon to create first labels **100** may be contained in a cartridge **107** that allows for simple loading. In one embodiment, the cartridge **107** includes a removal device adapted to automatically remove the backing material of the first label **100**. In one embodiment, the removal device comprises a knife edge portion to contact and remove the backing material of the first label **100**.

After printing, the first flipper arm **220** and the second flipper arm **222** can be rotated to a second position so that the first pressure roller is disconnected from the label path and a second pressure roller clamps down and feeds the first label **100** containing machine readable information forward for the peeling off of the first label **100** from a backing material for the automatic application of the first label **100** to a syringe **12**.

The label print and apply assembly **108** includes a mounting plate **232** for controlling the position and securing the components of the label print and apply assembly **108**. In one embodiment, the components of the label print and apply assembly **108** can be secured to the mounting plate **232** using fasteners and methods known in the art.

The label print and apply assembly **108** includes a first motor **234**, a second motor **236**, a third motor **238**, and a fourth motor **240** to operate the label print and apply assembly **108**. In one embodiment, the first motor **234** and the second motor **236** are stepper motors which allow for the indexing and controlling of the position of the first label **100** so that the printing of the machine readable information onto the first label **100** is printed and applied properly.

In one embodiment, the third motor **238** and the fourth motor **240** provide tension to the reel of labels so that the labels are held tightly and do not wrinkle, tangle, and/or crease. In this manner, the printing of the machine readable information onto the first label **100** is printed and applied properly to the first label **100**.

Referring to FIGS. **12** and **13**, the label print and apply assembly **108** includes an optical syringe alignment unit **250** having a first camera **252**, a second camera **254**, and a mounting bracket **256**. The optical syringe alignment unit **250** is positioned so that the first camera **252** and the second camera **254** are positioned adjacent the alignment area **131** of the syringe positioning and alignment component **126** as shown in FIG. **13**. In this manner, with the syringe **12** positioned within the syringe receiving port **104** and the luer tip **42** of the syringe **12** extending into the alignment area **131** of the syringe positioning and alignment component **126**, the first camera **252** and the second camera **254** are able to locate the luer tip **42** of the syringe **12**. For example, the first camera **252** is able to locate the precise position of the syringe **12** and luer tip **42** for automatic application of the first label **100** to the luer tip **42** of the syringe **12**. In one embodiment, the second camera **254** is able to inspect the machine readable information **102** on the first label **100** as the first label **100** is automatically being applied to the luer tip **42** of the syringe **12**. In another embodiment, the second camera **254** is able to inspect the machine readable information **102** on the first label **100** after the first label **100** is automatically applied to the luer tip **42** of the syringe **12**.

The mounting bracket **256** is adapted to connect the optical syringe alignment unit **250** so that the first camera **252** and the second camera **254** are positioned adjacent the alignment area **131** of the syringe positioning and alignment component **126**. In one embodiment, the mounting bracket **256** is connectable to an interior wall portion of the housing **14** of the labeling device **10**.

Referring to FIGS. **11** and **14**, the label print and apply assembly **108** includes a pinch roller mechanism **260** for exerting a force on the first label **100** as the first label **100** is automatically being applied to the luer tip **42** of the syringe **12** to ensure that the first label **100** is securely applied to the syringe **12**.

The pinch roller mechanism **260** includes a roller contact portion **262**, a pivotable frame member **264**, and a solenoid **266** including an actuation member **268**. The solenoid **266** is adapted to move the actuation member **268** forward and backward. The pivotable frame member **264** is movably connected to the actuation member **268** of the solenoid **266**. Movement of the actuation member **268** of the solenoid **266** forward causes the frame member **264** to pivot such that the roller contact portion **262** can be positioned to contact a portion of the first label **100** as the first label **100** is automatically being applied to the luer tip **42** of the syringe **12** to ensure that the first label **100** is securely applied to the syringe **12**. In one embodiment, the frame member **264** includes a receiving aperture **270** and the roller contact portion **262** includes a rod **272** that is received within the receiving aperture **270** so that the roller contact portion **262** is rotatably connected to the frame member **264**.

Referring to FIGS. **15-21**, in one embodiment, a tensioning control device or second labeling subsystem **18** is adapted to print a second label **300** including human readable information **302** and includes a first or supply label roll **310**, a first label actuator **312**, a first motor **314**, a first gear system **316**, a first mounting portion **318**, a second or windup label roll **320**, a second label actuator **322**, a second motor **324**, a second gear system **326**, a second mounting portion **328**, a substrate or movable label portion **330** between the first label roll **310** and the second label roll **320**, a removal device **332** adapted to automatically remove a backing material **304** from the second label **300**, an actuator or index control system **334**, a mounting plate **336**, a cover **338**, and a second printer device **340** having a label printer head **341**. Referring to FIGS. **1** and **15**, the cover **338** provides for protection of the components of the second labeling subsystem **18**.

In one embodiment, the second labeling subsystem **18** includes components that allow the second labeling subsystem **18** to automatically apply a second label **300** to a portion of the syringe **12**. In one embodiment, the second labeling subsystem **18** automatically applies a second label **300** to a portion of the syringe **12** simultaneously with the first labeling subsystem **16** automatically applying a first label **100** to a portion of the syringe **12**.

The human readable information **302** may be in full color and conforms to all applicable standards regarding layout and information contained on a label for a syringe. In this manner, the labeling device **10** provides a first label **100** having machine readable information **102** and a second label **300** having human readable information **302** so that a user and/or a machine can easily obtain the desired information regarding the syringe **12** and the contents therein. In one embodiment, the second label **300** may be printed using an inkjet printer so that the human readable information **302** may be in full color.

Referring to FIGS. **15-19**, the first label roll **310** and the second label roll **320** provide label rolls that allow the movable label portion **330** between the first label roll **310** and the second label roll **320** to be controlled. In one embodiment, the first label roll **310** is rotatably connected to the first label actuator **312** and the second label roll **320** is rotatably connected to the second label actuator **322**. The first label actuator **312** is drivingly connected to the first gear system **316** and the first motor **314**. The second label actuator **322** is drivingly connected to the second gear system **326** and the second motor **324**. The first label actuator **312**, the first gear system **316**, and the first motor **314** are movably secured to the first mounting portion **318**. The first mounting portion **318** is adapted to secure the gears of the first gear system **316** to the first mounting portion **318** to control the position of the gears of the first gear system **316**. In one embodiment, the first mounting portion **318** is formed of sheet metal.

The second label actuator **322**, the second gear system **326**, and the second motor **324** are movably secured to the second mounting portion **328**. The second mounting portion **328** is adapted to secure the gears of the second gear system **326** to the second mounting portion **328** to control the

position of the gears of the second gear system **326**. In one embodiment, the second mounting portion **328** is formed of sheet metal.

In one embodiment, the first gear system **316** is adapted to provide an arrangement that can be used to increase the strength of the first motor **314**. For example, the first gear system **316** is adapted to provide an arrangement that can be used to increase the power, e.g., torque, and/or speed of the first motor **314**. In one embodiment, the second gear system **326** is adapted to provide an arrangement that can be used to increase the strength of the second motor **324**. For example, the second gear system **326** is adapted to provide an arrangement that can be used to increase the power, e.g., torque, and/or speed of the second motor **324**.

In one embodiment, the mounting plate **336** is adapted to secure the components of the second labeling subsystem **18** to the mounting plate **336** to control the position of the components of the second labeling subsystem **18**. In one embodiment, the mounting plate **336** is formed of sheet metal.

The first motor **314** provides a mechanism to control the torque applied to the first label roll **310** in a first direction generally along arrow A (FIG. **17**) and the second motor **324** provides a mechanism to control the torque applied to the second label roll **320** in a second direction generally along arrow B (FIG. **17**). The second direction is generally opposite the first direction. In this manner, the first motor **314** and the second motor **324** apply torque to the respective first label roll **310** and the second label roll **320** in opposing directions, thereby placing the movable label portion **330** in tension. In one embodiment, the first motor **314** applies an equal torque force to the first label roll **310** as the second motor **324** applies to the second label roll **320** so that there is no bias in the tensioning force applied to the movable label portion **330**. For example, an equal amount of forward tension and rearward tension is applied to the movable label portion **330** so that the net tension force applied to the movable label portion **330** is zero.

By placing the substrate or movable label portion **330** in tension in the manner described above, an actuator or index control system **334** is able to incrementally move the movable label portion **330** back and forth independent of the tension applied to the movable label portion **330**. For example, the index control system **334** is adapted to move the label portion **330** in a forward direction and a backward direction. The second labeling subsystem **18** allows for precise control of the movement of the movable label portion **330**. For example, the second labeling subsystem **18** allows for independent control of the tension applied to the movable label portion **330**, the position of a given point on the movable label portion **330**, and the speed at which the movable label portion **330** travels. The second labeling subsystem **18** allows for the precise control of the movement of the movable label portion **330** to control the application of a secondary material to the movable label portion **330**, the printing of the human readable information on the movable label portion **330** to form a second label **300**, and the cutting of the second label **300** from the movable label portion **330** using a cutting mechanism. The cutting mechanism may include a knife, laser, or water jet printing cutting mechanism.

In one embodiment, the first motor **314** and the second motor **324** are servomotors with closed loop feedback to maintain the proper tension applied to the movable label portion **330**. In another embodiment, the first motor **314** and the second motor **324** are brushed DC motors driven by a PWM signal in a torque control mode. In other embodiments, other motors are used to apply tension to the movable label portion **330**. For example, the first motor **314** and the second motor **324** may be servo or stepper motors with a closed or open loop feedback to maintain the proper tension applied to the movable label portion **330**.

The index control system **334** can include any drive mechanism adapted to move the movable label portion **330** back and forth. In one embodiment, the index control system **334** is a printing mechanism. In other embodiments, other drive mechanisms may be used. In some embodiments, a laser cut printing mechanism, a water jet printing mechanism, or a knife cut printing mechanism may be used.

After the human readable information **302** is printed onto a second label **300**, the second label **300** is moved towards an exit area **344** for automatic removal of the backing material **304** of the second label **300**. In one embodiment, the second labeling subsystem **18** includes a removal device **332** adapted to automatically remove the backing material **304** of the second label **300**. In one embodiment, the removal device **332** comprises a wall that contacts the backing material **304** of the second label **300** as the second label **300** is advanced towards the exit area **344** for removal of the second label **300** from the labeling device **10**. In this manner, as the second label **300** advances towards the exit area **344**, the removal device **332** contacts the backing material **304** and provides a physical barrier that removes the backing material **304** from the second label **300** as the second label **300** is able to advance beyond the removal device **332**. The removal device **332** is dimensioned so that the wall of the removal device **332** contacts the backing material **304** but does not contact the second label **300** so that the second label **300** advances past the removal device **332** while the removal device **332** automatically removes the backing material **304**. In one embodiment, the removal device is a wall or edge of sheet metal.

After the second label **300** advances past the removal device **332** and the backing material **304** is removed, the second label **300** advances past the label slot **76** at the front portion **54** of the housing **14** of the labeling device **10** as shown in FIG. **1**. In this manner, a user is then able to pick up the second label **300** with one hand and apply the second label **300** having human readable information **302** to the syringe **12** as shown in FIG. **2**C. In one embodiment, a cutting mechanism is adapted to automatically cut a portion of the second label **300** for removal of the second label **300** from the labeling device **10**.

The user does not have to remove the backing material **304** from the second label **300** because the second labeling subsystem **18** has already automatically removed the backing material **304**. Requiring a user such as a medical practitioner to manually remove the backing material **304** from the second label **300** can be a difficult and time consuming process, especially considering the user will be wearing gloves. Also, the user would have to dispose of the backing material **304** every time a second label **300** was printed. Further, the user would have to put down the syringe **12** the second label **300** was meant for, potentially causing confusion if placed near other, similar syringes on a table top or tray.

Referring to FIGS. **1-21**, the use of labeling device **10** to print a first label **100** having machine readable information **102** and a second label **300** having human readable information **302** for a syringe will now be described.

Referring to FIG. **2**A, a needle **44** is attached to syringe barrel **24** and the needle **44** is used to fill the syringe barrel **24** with a medication from a separate container, such as a vial, prior to use. Once the syringe barrel **24** is filled with a

desired medication, the protective cap **46** is attached to the syringe barrel **24** to surround and cover the needle **44** to prevent accidental needle stick injuries. Next, the syringe barrel **24** and protective cap **46** can be placed within the syringe receiving port **104** of the first labeling subsystem **16** of labeling device **10**. The syringe **12** is placed within the syringe clamp assembly **106** of the first labeling subsystem **16** with the gripping components **120** in the open position (FIG. **4**). The top door **66** can be opened to place the syringe **12** within the labeling device **10** and closed once the syringe **12** is properly placed within the syringe receiving port **104** of the first labeling subsystem **16** of labeling device **10**.

Next, the gripping components **120** are moved to the closed position to contact and grip the syringe **12**. As the gripping components **120** are moved to the closed position, the gripping components **120** also center the syringe **12** to the proper orientation within the clamp assembly **106** for the automatic application of the first label **100** to the syringe **12**. In one embodiment, the drive gear **112** controls the movement of the gripping components **120** between the open position and the closed position via the movable cam connection between the drive gear **112** and the gripping components **120**, e.g., cam posts **138**, **142**, **146** connecting the gripping components **120** and the drive gear at the cam slots **136**, **140**, **144**. In this manner, the syringe clamp assembly **106** securely holds syringe **12** while the label print and apply assembly **108** automatically applies a first label **100** to the luer tip **42** of the syringe **12**. Advantageously, the automatic application of the first label **100** to the syringe **12** using labeling device **10** eliminates the potential for misapplication of the first label **100** or human error.

Next, the print and apply state controller **218** of the label print and apply assembly **108** activates the first label print assembly **200** to print a first label **100**. After printing of the first label **100**, the print and apply state controller **218** activates the label apply assembly **202** to automatically apply the first label **100** to the luer tip **42** of the syringe **12**. To facilitate the automatic application of the first label **100** to the syringe **12**, the components of the clamp assembly **106** rotate together to rotate the syringe **12** during the automatic application of the first label **100** to the syringe **12**. In one embodiment, the syringe **12** is rotated during the automatic application of the first label **100** to the syringe **12** while the first label **100** remains in a stationary position. To ensure the first label **100** is securely applied to the syringe **12**, outward movement of the actuation member **268** of the solenoid **266** causes the frame member **264** to pivot such that the roller contact portion **262** can be positioned to contact a portion of the first label **100** as the first label **100** is automatically being applied to the luer tip **42** of the syringe **12**. In one embodiment, the first label **100** is of a sufficient length so that as the first label **100** is applied to the luer tip **42** of the syringe **12**, the first label **100** wraps around the luer tip **42** and a portion of the first label **100** overlaps itself. In this manner, the first label **100** is securely attached to a luer tip **42** that may have a lubricant or other fluid on it.

As the operation of the printing and automatic application of the first label **100** to the syringe **12** is occurring, the second labeling subsystem **18** can print the second label **300** including human readable information **302** as described above.

As described above, the first motor **314** and the second motor **324** apply torque to the respective first label roll **310** and the second label roll **320** in opposing directions, thereby placing the movable label portion **330** in tension. By placing the movable label portion **330** in tension, an index control system **334** is able to incrementally move the movable label portion **330** back and forth independent of the tension applied to the movable label portion **330**. The second labeling subsystem **18** allows for independent control of the tension applied to the movable label portion **330**, the position of a given point on the movable label portion **330**, and the speed at which the movable label portion **330** travels.

After the human readable information **302** is printed onto a second label **300**, the second label **300** is moved towards the exit area **344** for automatic removal of the backing material **304** of the second label **300** via the removal device **332**.

After the first label **100** is printed and automatically applied to the luer tip **42** of the syringe **12**, a user is able to remove the syringe **12** from the labeling device **10**. Next, the user can easily remove the second label **300** from the label slot **76** and position the second label **300** on the syringe **12**. Advantageously, the user does not have to remove the backing material **304** from the second label **300** as the second labeling subsystem **18** has already automatically removed the backing material **304**. Next, the syringe **12** may be used to administer a medication as is known in the art.

The labeling device **10** provides for a syringe **12** having a first label **100** including machine readable information **102** and a second label **300** including human readable information **302** as shown in FIG. **2**C. In this manner, the labeling device **10** provides a first label **100** having machine readable information **102** and a second label **300** having human readable information **302** so that a user and/or a machine can easily obtain the desired information regarding the syringe **12** and the contents therein. The machine readable information **102** on the first label **100** may be scanned to determine the contents of the syringe **12** at any time using the same scanner used to scan drug vials. For example, in one embodiment, the scanner **20** located on the front portion **54** of the housing **14** of the labeling device **10** can be used to scan the machine readable information **102** on the first label **100** to determine the contents of the syringe **12** at any time.

A syringe **12** having a first label **100** including machine readable information **102** and a second label **300** including human readable information **302** provides encoded syringes that can be utilized along with the EMR system of a hospital to track drug administration, check for potential allergies or drug interactions, and/or other important information, all without the need for human intervention.

The labeling device **10** is envisioned to be a part of a larger system solution to combat medication errors. For example, the labeling device **10** works to eliminate the following adverse effects that can be caused by medication errors: (1) unclear syringe contents from unlabeled or poorly labeled syringes; (2) allergic reactions; (3) drug interactions; and (4) poor record keeping, e.g., which drugs were administered, concentration, and/or quantity of drug.

It is envisioned that other potential methods may be used with the labeling device **10** of the present disclosure for linking each syringe to specific information regarding the drugs contained within the syringe and patient information. For example, the machine readable information **102** on the first label **100** may comprise any mechanism for transmitting specific information regarding the drugs contained within the syringe and patient information. In one embodiment, a radio-frequency identification (RFID) system may be used. Empty syringes may come preloaded with an RFID or an RFID label would be applied. The labeling device **10** would read the code and add that information to a database, tying the syringe to the drug and concentration the syringe contains as well as which patient it was intended for. In such a

system, it would also be possible to add information to the unique RFID from a database.

In one embodiment, a near field communication system may be used. Such a system would include similar implementation to the RFID system discussed above.

In one embodiment, a laser marking system may be used. The labeling device **10** may contain a laser capable of marking the syringe directly, or a blank label on the syringe, with the necessary barcode information. Such a system may or may not require custom formulation of syringe material to incorporate photosensitive materials for use with the laser.

While this disclosure has been described as having exemplary designs, the present disclosure can be further modified within the spirit and scope of this disclosure. This application is therefore intended to cover any variations, uses, or adaptations of the disclosure using its general principles. Further, this application is intended to cover such departures from the present disclosure as come within known or customary practice in the art to which this disclosure pertains and which fall within the limits of the appended claims.

What is claimed is:

1. A tensioning control device for tensioning a substrate, comprising:

a first motor applying a first torque to a first end of the substrate in a first direction; and

a second motor applying a second torque to an opposing second end of the substrate in a second direction, the second direction generally opposite the first direction thereby placing the substrate in tension,

wherein the substrate is configured to include a label and configured to be applied to a syringe.

2. The tensioning control device of claim **1**, wherein the first torque applied to the first end of the substrate is equal to the second torque applied to the opposing second end of the substrate.

3. The tensioning control device of claim **1**, further comprising an actuator adapted to move the substrate in a forward direction and a backward direction.

4. The tensioning control device of claim **3**, wherein the actuator is adapted to move the substrate in the forward direction and the backward direction independent of the tension applied to the substrate.

5. The tensioning control device of claim **3**, wherein the actuator is adapted to move the substrate by predetermined increments.

6. The tensioning control device of claim **1**, further comprising a printer configured to print onto a portion of the substrate.

7. The tensioning control device of claim **1**, wherein the label provides information relating to the syringe or contents contained within the syringe.

8. A tensioning control device for tensioning a substrate, comprising:

a first motor applying a first torque to a first end of the substrate in a first direction;

a second motor applying a second torque to an opposing second end of the substrate in a second direction, the second direction generally opposite the first direction thereby placing the substrate in tension;

an actuator adapted to move the substrate in a forward direction and a backward direction independent of the tension applied to the substrate; and

a printer configured to print onto a portion of the substrate.

9. The tensioning control device of claim **8**, wherein the first torque applied to the first end of the substrate is equal to the second torque applied to the opposing second end of the substrate.

10. The tensioning control device of claim **8**, wherein the actuator is adapted to move the substrate by predetermined increments.

11. The tensioning control device of claim **8**, wherein the substrate is configured to include a label and configured to be applied to a syringe.

12. A labeling system for labeling a syringe, comprising:

a material configured to include a label and configured to be applied to a syringe, the material having a first end and an opposing second end;

a first motor applying a first torque to the first end of the material in a first direction;

a second motor applying a second torque to the opposing second end of the material in a second direction, the second direction generally opposite the first direction thereby placing the material in tension; and

an actuator adapted to move the material in a forward direction and a backward direction independent of the tension applied to the material.

13. The labeling system of claim **12**, further comprising a printer adapted to print information on the material.

14. The labeling system of claim **12**, wherein the material comprises a removable backing layer.

15. The labeling system of claim **14**, further comprising a removal device adapted to automatically remove the removable backing layer from the material after the label has been printed onto the material.

16. The labeling system of claim **12**, wherein the first torque applied to the first end of the material is equal to the second torque applied to the opposing second end of the material.

17. The labeling system of claim **12**, wherein the actuator is adapted to move the material by predetermined increments.

18. The labeling system of claim **12**, wherein the label provides information relating to the syringe or contents contained within the syringe.

* * * * *