Dec. 15, 1970 D. I. KUPPERMAN ET AL 3,546,811

TOY AIRPLANE

Filed Jan. 6, 1969

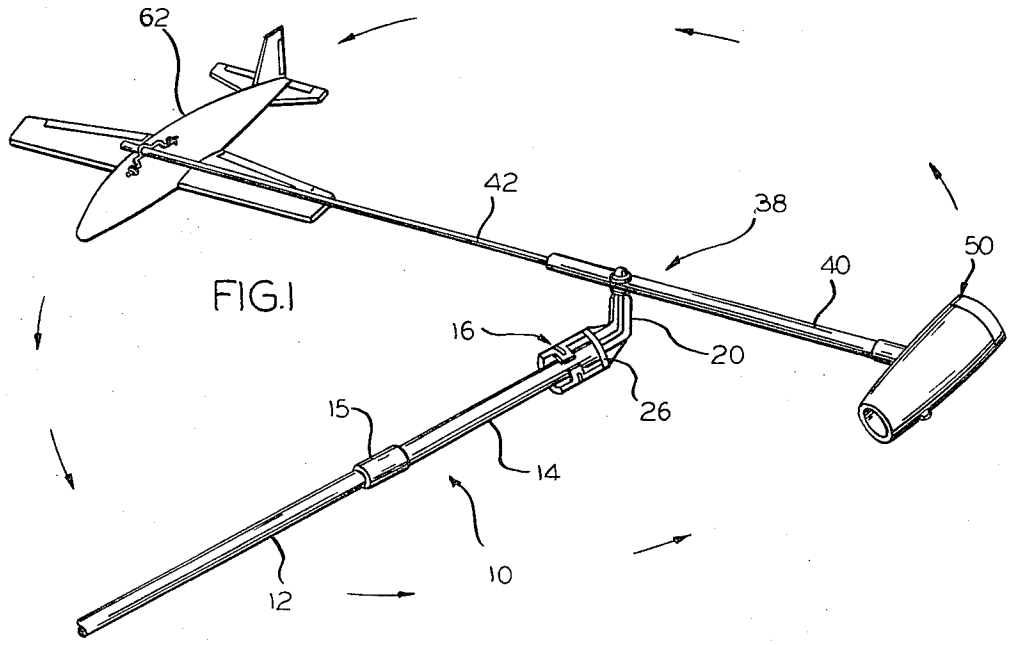

FIG.1

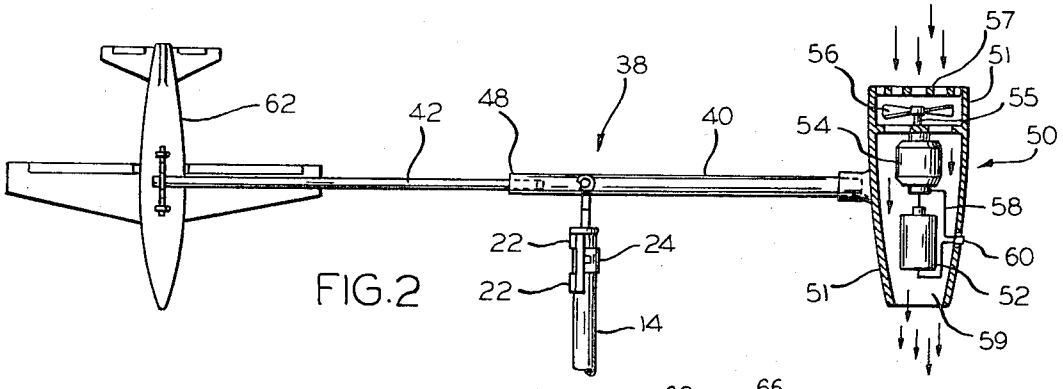

FIG.2

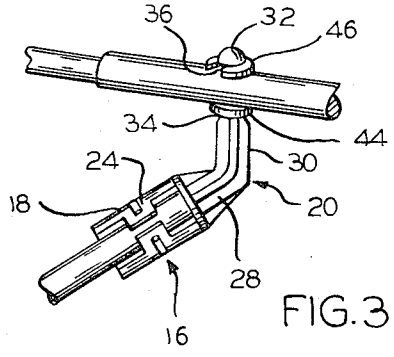

FIG.3

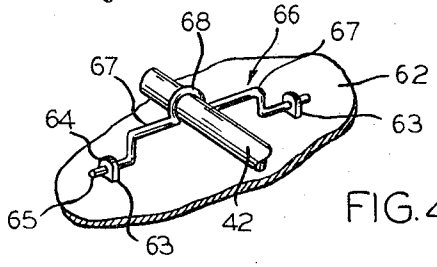

FIG.4

INVENTORS
DENNIS I. KUPPERMAN
SAM KUPPERMAN

BY

Mal R. Kraus

ATTORNEY

United States Patent Office 3,546,811 Patented Dec. 15, 1970

3,546,811

TOY AIRPLANE

Dennis I. Kupperman, Des Plaines, and Sam Kupperman, Chicago, Ill. (both of 4139 Main St., Skokie, Ill. 60076)

Filed Jan. 6, 1969, Ser. No. 789,301
Int. Cl. A63h 27/04
U.S. Cl. 46—243 10 Claims

ABSTRACT OF THE DISCLOSURE

A hand held toy airplane which includes a handle for holding same while the toy is being operated, a rotatable arm which supports at one end thereof a flying toy, such as a simulated airplane, and supports at its opposite end a power unit comprising a motor, a battery, and a propeller operated by the motor, whereby when the motor is operating the propeller causes the power unit, the arm and the simulated toy airplane to rotate with respect to the handle, and by manually manipulating the handle through various angles the airplane is caused to fly through various flying patterns.

BRIEF SUMMARY OF THE INVENTION

One of the objects of this invention is to provide a toy airplane which is highly portable and may be readily carried around while it is operating, and which includes a handle by which the toy is held in the hand, and which is manipulated through various angles to cause the toy airplane to fly through various flying patterns.

Other objects will become apparent as this description progresses.

BRIEF DESCRIPTION OF THE DRAWINGS

In the drawings:

FIG. 1 is a perspective view of the toy forming this invention and showing the angle by which the toy is held to cause the toy airplane to fly in a substantially horizontal plane.

FIG. 2 is a top plan view of the toy with a portion shown in section.

FIG. 3 is an enlarged view of a portion of the arm and the means for supporting the arm.

FIG. 4 is an enlarged fragmentary view showing the manner in which the airplane is supported by the arm.

The toy device is of very simple structure and includes a handle generally indicated at **10** which is adapted to be held in the hand and which is normally held at an inclined angle, as shown in FIG. 1. For the purpose of packaging, the handle **10** is made in two rod sections **12** and **14**, which sections are held together by a sleeve **15** so that the handle may be disassembled to reduce its overall length.

Secured to the upper end of the upper rod section **14** of the handle is a connector member generally indicated at **16**, molded preferably of a plastic material, which includes a sleeve portion generally indicated at **18** and an extension generally indicated at **20**. The sleeve is molded to form spaced concave side sections **22** on one side with a split concave opposite side section **24** positioned intermediate the side sections **22** to form the split sleeve **18** which frictionally engages the rod section **14** to detachably secure same to said connector. The sleeve has an end wall **26** against which the rod **14** abuts. The extension **20** is molded integrally with the sleeve **18** and comprises a portion **28** which extends forwardly of the axis of the sleeve and a portion **30** which extends upwardly at an inclined angle of approximately 120° with respect to the axis of the sleeve. This construction is best shown

in FIG. 3. The angle of the portion **30** relative to the portion **28** allows the airplane to fly its various patterns when the handle **10** is twisted or manipulated by the hand of the operator. Without this angled relationship there would be no varying of the flight pattern to the extent now possible with this construction.

Extending upwardly of the upper portion **30** of the extension **20** is a reduced annular stem **32** providing a shoulder **34**. The stem has an annular recess **36**. An arm generally designated by the numeral **38** comprising two sections **40** and **42** is rotatably supported on the annular stem **32** of the extension. A washer **44** is positioned to rest on the shoulder **34**. The section **40** of the arm has an opening which is received on the annular stem **32**. A split washer **46** is snapped into the recess **36** of the stem **32** to secure the arm **38** to the extension **20** but permits rotation of the arm. The inner end of the arm section **40** has a sleeve portion **48** into which the inner end of the arm section **42** is inserted to frictionally secure the arm sections **40** and **42** together to form a single arm, but which may be detached from each other for the purpose of reducing the overall length of the arm for packaging purposes. The arm **38** is adapted to rotate about the stem **32** of the connector, as will be subsequently described.

Affixed to the outer end of arm section **40** is a power unit generally indicated at **50** which includes a housing **51** formed of plastic which contains and supports therewithin a small dry cell battery **52** and a small battery operated motor **54**. The motor shaft **55** has secured to it a propeller **56**. The front of the housing has a protective grill **57** to prevent the hand from engaging the spinning propeller. The motor and battery are connected by suitable conductors **58**, with a switch **60** for opening and closing the circuit.

The arm section **42** supports at its outer end a simulated or toy airplane generally indicated at **62**, which may be of any design, preferably simulating a jet airplane. The toy airplane **62** is provided at the top thereof with a pair of spaced ears **63** having openings **64** which receive the opposite ends **65** of a wire spring clip generally indicated at **66**. The clip is shaped, as shown in FIG. 4, to provide a raised portion **67** and a further raised central socket portion **68** which receives the outer end of the arm section **42** secured thereto. The top of the airplane is thus positioned below the arm section **42** so as not to interfere with the pivotal movement of the airplane as it pivots relative to the arm section **42**. While the clip **66** is held fixed relative to the arm section **42**, the pivoting of the airplane will be through the ears **63** and the ends **65** of the clip **66**.

The power unit **50** is heavier than the simulated airplane and therefore to counterbalance same the power unit is positioned closer to the axis stem **32** than is the toy airplane **62**. By this arrangement the arm is counterbalanced so that even while the toy is not in operation it will be supported in a generally horizontal plane.

The toy can be packaged in a relatively small box by disassembling the two arm sections **40** and **42** so that the overall length of the longest section determines one dimension of the box. The same would be true of the handle rod sections **12** and **14** which are disassembled. Therefore, the unit may be readily packed in a compact manner in a box of a reduced size and may be readily assembled by merely connecting the arm sections **40** and **42**, as shown, and by also connecting the rod sections **12** and **14** forming the handle.

The operation of the toy airplane will be understood from the foregoing, but briefly described is as follows. The child will hold the handle **10** and when the switch **60** is closed the motor **54** will rotate the propeller **56** to draw air into the housing of the power unit which is ex-

pelled through the rear opening **59** of the housing, as indicated by the arrows in FIG. 2, which causes the arm **38** to rotate about the stem **32** as the axis, and thereby simultaneously rotate the power unit **50** and the airplane **62** supported on the opposite end of the arm. By twisting and/or positioning the handle **10** to various degrees, the arm **38** may be rotated through different planes and angles, with the airplane **62** caused to pivot relative to the arm. This produces various types of flying performances and permits the child to control the angles of flight through various manipulative movements of the handle **10**. The angle of the portion **30** relative to the portion **28** of the extension **20** is an important factor in this respect. There is thus provided a toy having great play value for the child as the flight patterns of the airplane can be controlled as it continues to rotate about the stem **32** as the axis.

The toy airplane is so constructed that it can be carried from indoors to the outdoors and has all the advantages of a toy which is hand-held as contrasted to toys which are supported on stationary pylons or the like.

What is claimed is:

1. A hand supported toy comprising a handle adapted to be manually engaged by a person's hand for supporting the toy, an arm secured to said handle for rotation about said handle, said arm supporting a toy figure adjacent one end thereof and supporting adjacent the opposite end thereof a power unit comprising a motor and a battery for operating said motor, a propeller forming part of said unit and connected to and operated by said motor so that rotation of said propeller will cause the arm to rotate about said handle.

2. A toy as defined in claim **1** in which the arm is supported at angle of approximately 120° with respect to the handle.

3. A toy as defined in claim **1** in which the power unit includes a housing for the battery and motor and has a switch for opening and closing the circuit between the battery and the motor.

4. A toy as defined in claim **2** in which the toy figure is a simulated airplane, and in which the arm is supported in off-center position with respect to the handle so that the arm is counterbalanced.

5. A toy as defined in claim **1** in which the toy figure is a simulated airplane and in which the arm is secured to the handle in an off-center position so that the weight on one end of the arm will be balanced relative to the weight at the opposite end of the arm so that the arm is maintained in a substantially balanced state with respect to the handle.

6. A toy as defined in claim **1** in which the toy figure is a simulated airplane and in which a connector member is secured to the upper end of the handle, said connector member having a sleeve portion at one end which engages the upper end of the handle and having an extension extending upwardly of the sleeve portion which has a portion positioned at an inclined angle relative to the sleeve, with the arm rotatably secured to the extension.

7. A toy as defined in claim **6** in which the extension is at an angle of approximately 120° with respect to the sleeve portion.

8. A toy as defined in claim **6** in which the arm is formed of a pair of sections which are detachably connected and in which the handle is formed of a pair of sections detachably connected.

9. A toy as defined in claim **1** in which the toy figure is a simulated airplane which is pivotally secured to the arm so that it may pivot relative to said arm.

10. A toy as defined in claim **6** in which the connector member is molded of plastic material and in which the extension of the connector is at an inclined angle of approximately 120° relative to the sleeve, and in which the sleeve is split to permit it to give to provide a frictional fit with the upper end of the handle.

References Cited

UNITED STATES PATENTS

1,482,976	2/1924	Downey	272—31
2,222,648	11/1940	Biller	46—76X
2,423,380	7/1947	Gerbino et al.	46—76
3,202,425	8/1965	Hennik	272—31X

LOUIS G. MANCENE, Primary Examiner

D. L. WEINHOLD, Assistant Examiner

U.S. Cl. X.R.

46—47, 77; 272—31