L. R. DAVIS.

COATING APPARATUS.

APPLICATION FILED OCT. 4, 1918.

1,347,256.

Patented July 20, 1920.

2 SHEETS—SHEET 1.

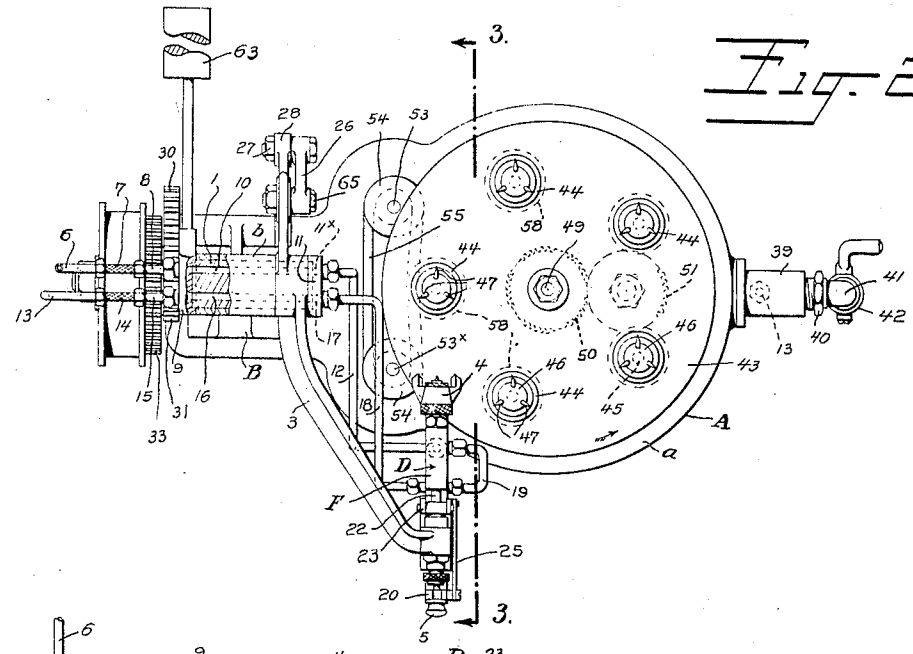

Fig. 2.

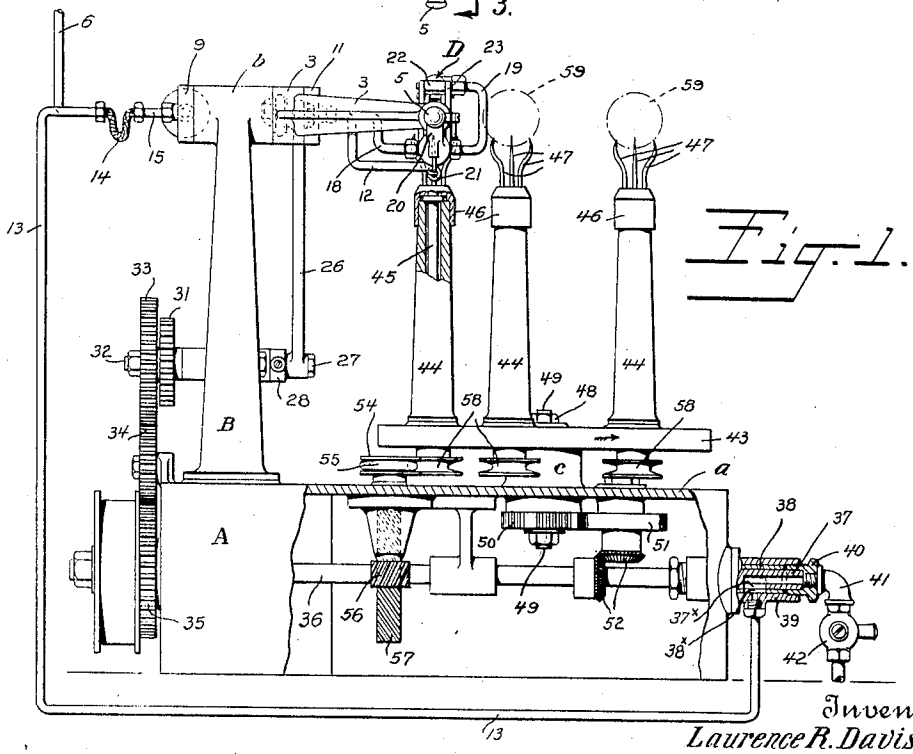

Fig. 1.

Inventor.

Laurence R. Davis,

By his Attorney.

Ernest Stephenson

L. R. DAVIS.

COATING APPARATUS.

APPLICATION FILED OCT. 4, 1918.

1,347,256.

Patented July 20, 1920.

2 SHEETS—SHEET 2.

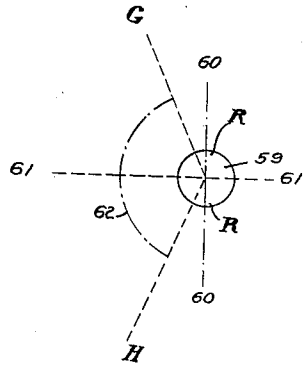

Fig. 4.

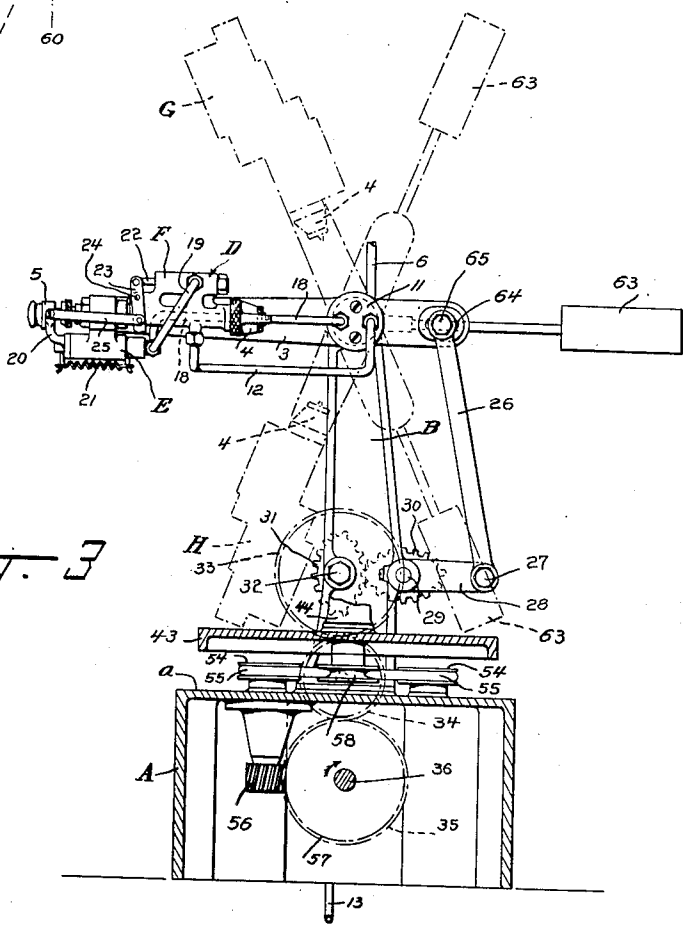

Fig. 3.

Inventor.
Laurence R. Davis,
By his Attorney.
Bruce Hopkinson

UNITED STATES PATENT OFFICE.

LAURENCE R. DAVIS, OF PROVIDENCE, RHODE ISLAND, ASSIGNOR TO REVERE RUBBER COMPANY, A CORPORATION OF RHODE ISLAND.

COATING APPARATUS.

1,347,256. Specification of Letters Patent. Patented July 20, 1920.

Application filed October 4, 1918. Serial No. 256,883.

To all whom it may concern:

Be it known that I, LAURENCE R. DAVIS, a citizen of the United States, residing at Providence, in the county of Providence and State of Rhode Island, have invented new and useful Improvements in Coating Apparatus, the object of the invention being to provide a machine comprising automatically operating means for uniformly applying a coating of liquid upon the surface of a relatively small article, for instance, a coating of paint upon the surface of a golf ball.

The embodiment of the invention hereinafter described relates more particularly to the painting of golf balls, and comprises a series of carriers adapted to successively move into register with a paint spraying device, the latter swinging in the arc of a circle, simultaneously with the rotation of the carrier, to insure the covering of the entire surface of the ball.

The invention will be understood by reference to the accompanying drawings, in which:

Figure 1 is a side elevation partly in section of a machine embodying the improvement, and

Fig. 2 is a plan view of the same.

Fig. 3 is a vertical section of the apparatus on the line 3—3, Fig. 2.

Fig. 4 is a diagrammatic view illustrating the relative movements of the spraying device and ball.

The apparatus comprises a frame A from which rises a standard B, the frame being formed with a horizontal table *a* from which rises a short standard C. The standard B at its top is provided with a boss *b* which is formed with a horizontal aperture to receive a short shaft 1. Upon a projection of shaft 1 is rigidly mounted an arm 3 which at its outer end carries an atomizer D. The atomizer is provided with a nozzle 4 adapted to be closed by a needle valve (not shown), the needle valve having at one end a head 5 for a purpose hereinafter set forth.

The supply of paint is led from the source of supply to a tube 6 having a flexible hose connection 7 with a short tube 8 carried by a cap 9 which closes one end of the boss *b*; and the tube 8 in cap 9 registers with a horizontal duct 10 in shaft 1, the latter duct being in register with a similar duct $11^{\times}$ formed in a cap 11 which serves to close the opposite end of the boss *b*. A tube 12 connected to cap 11 is in register with duct $11^{\times}$ and serves to convey the paint to the atomizer D. Air under pressure is led from a source of supply to a tube 13 having a flexible hose connection 14 with a short tube 15 carried by cap 9, the said tube 15 being in register with a duct 16 extending horizontally of shaft 1 and in register with a duct 17 formed in cap 11. A tube 18 secured to cap 11 is in register with duct 17 and serves to convey the air to a cylinder E on the atomizer body, and also by means of tube 19 to a second cylinder F.

When air under pressure passes through tube 18 into cylinder E, it acts within the said cylinder upon a piston connected to an arm 20 secured to needle valve head 5. The piston is moved outward against the tension of a spring 21, and the corresponding movement imparted to arm 20 actuates the needle valve to open the atomizer. Simultaneously with such action, air is admitted into the atomizer from cylinder F by the following mechanism: In a duct between the atomizer and the air cylinder F is disposed a valve which is controlled by a valve rod 22, and to said rod is connected a lever 23 fulcrumed at 24 upon the atomizer body. This lever 24 is operatively connected by link 25 with needle valve operating arm 20. Thus when the needle valve is moved into position to open the atomizer the duct between the air cylinder F and the atomizer is also opened so that the paint may be forced out of the atomizer by a spray of air.

To the rear end of arm 3 is adjustably connected a link 26, and the latter is connected at 27 to a bell crank 28 rotating with a shaft 29 journaled in suitable bearing bosses on the standard B. Upon shaft 29 is mounted an elliptical gear 30 in mesh with a second elliptical gear 31 on a shaft 32 rotating in suitable bearing bosses on the standard B. Shaft 32 is driven by means

of gear 33 (Fig. 1) in mesh with a second gear 34 driven by gear 35 on the main shaft 36. By the foregoing means arm 3 with the atomizer may be swung from its dotted line position G to its dotted line position H, Fig. 3, and thence back to initial position with a varying speed.

Connected to main shaft 36 at one end thereof, is a sleeve valve 37 which rotates within the valve casing 38 which in turn is fitted within the housing 39. One end of the rotary sleeve valve projects within a coupling 40 between the valve casing and a conduit 41 leading to air under pressure. A valve 42 may be employed to open or close the conduit. It will be seen that in the construction just described the rotation of sleeve valve 37 by shaft 36 will bring valve port 37× of sleeve 37 alternately into and out of register with valve port 38× in casing 38. The parts are so timed that the valve is opened during the downward or active movement of the atomizer and is closed during the upward or return movement of the atomizer. Thus when the atomizer reaches the end of its downward movement air is shut off by valve 37 from the tube 18 leading to cylinder E, and the fall of pressure in said cylinder will permit spring 21 to retract the piston connected to arm 20, and the latter in its inward movement will act upon needle valve head 5 to close the atomizer. Simultaneously with such action link 25 will be moved to the right from its position in Fig. 3, and in such movement will rock lever 23 and move valve rod 22 to closed position, thus shutting off the passage of air to the atomizer.

The carriers and the mechanism for rotating the same will now be described. Mounted for rotation upon standard C is a table 43. This table rigidly supports a plurality of hollow standards 44, and within each standard is suitably journaled a shaft 45 which is connected at its upper end with a carrier 46 for the golf ball. Each carrier is provided with a plurality of needle-pointed tines 47 upon which the golf ball may rest. Connected at 48 to the rotary table and extending through standard C is a shaft 49 which at its lower end carries a gear 50 engaged by a mutilated driving gear 51 which is driven from main shaft 36 by means of bevel gears 52. The gears 50, 51, are so proportioned that the table 43 has alternate periods of motion and rest. In each period of motion of the table a carrier 46 will be brought into register with the atomizer, and thereupon the carrier will be rotated by the following means: Suitably journaled in frame A are two vertical shafts 53, 53× (Fig. 2). each shaft carrying at its upper end a pulley wheel 54, a belt 55 connecting the said pulley wheels. The shaft 53× is provided at its lower end with a spiral gear 56, and a gear 57 on main shaft 36 is in mesh therewith. Thus it will be seen that belt 55 is constantly driven from the main shaft. When the table 43 in a period of action moves a carrier 46 into register with the atomizer, the friction wheel 58 on carrier shaft or spindle 45 will be brought into contact with belt 55. Thereupon the carrier will be rotated, and such rotation will be continued until, at the end of its period of rest, the table is given a second partial rotation to advance another carrier into position.

In the operation of the apparatus each carrier will move into register with the atomizer and thereupon the ball 59 will be rotated on the axis 60, Fig. 4. By reference to Fig. 4 it will be seen that if the atomizer remains motionless at the median line 61 of the ball, the poles R of the ball would not be subjected to the full action of the spray. It is for this reason that the atomizer is swung in the arc 62. It will also be seen by reference to the aforesaid diagrammatic figure that inasmuch as the ball rotates on the axis 60 and the atomizer swings on the arc 62, the ball offers a greater surface to the atomizer as the latter approaches the median line 61, and a gradual decreasing surface as the atomizer approaches its lowermost position H. Therefore the actuating mechanism for the swinging arm 3 is so constructed as to gradually decrease the speed of movement of the atomizer from its upper position G to the median line 61, and to gradually increase its speed of movement as it passes the said median line toward its final position H. This variation in speed is accomplished by means of the elliptical gears 30, 31, as will be understood without further explanation.

In order that the arm 3 may be swung with minimum power, a weight 63 may be placed at one end thereof to counter-balance the weight of the atomizer parts at its opposite end. Also the connection between link 26 and arm 3 may be so formed as to permit an adjustment of the link toward and from the axis of movement of the arm so that the extent of movement of the latter may be varied at will. Such means are provided in the present embodiment of the invention by a slot 64 formed in the arm for the reception of bolt 65 at the upper end of link 26.

Having thus described my invention, what I claim to protect by Letters Patent is:

1. In apparatus of the character described, the combination with a spraying device, of a series of carriers for the articles to be coated, means for successively moving the carriers into register with said spraying device, and controlling means for the spraying device adapted to automatically shut off the spray prior to the movement of a carrier

into register therewith, the said controlling means comprising a drive shaft for the carrier-operating means, a sleeve valve carried by the drive shaft at one end thereof, a casing for the valve, means for admitting fluid pressure to the valve, and a conduit affording communication between the valve and said spraying device.

2. In apparatus of the character described, the combination with a spraying device, of a table and means for rotating the same with a step by step movement, spindles extending through the said table and revolubly supported thereby, pulleys carried by said spindles below said table, means adapted for rotation of the said pulleys in succession, and devices connected with the opposite ends of said spindles for supporting articles to be coated.

3. In apparatus of the character described, the combination with a spraying device, of a table and means for rotating the same with a step by step movement, standards vertically supported upon said table, spindles extending through said table and standards, pulleys on the ends of the spindles projecting below said table, a drive belt in the path of the said pulleys and adapted to rotate the same as they are successively brought into engagement therewith by the table, and devices connected with said spindles for supporting articles to be coated.

4. In apparatus of the character described, the combination with a spraying device, of a table and means for rotating the same with a step by step movement, a series of rotary carriers, each carrier comprising a standard mounted upon the table, a spindle rotatable within the standard and projecting below the table, tines carried at the upper end of the shaft and affording a support for the article to be coated, a driving element carried by the spindle below said table, and means for rotating the driving element during each cycle of movement of the table.

5. In apparatus of the character described, the combination with an intermittently acting spraying device, of a series of carriers for the articles to be coated, means for imparting to said spraying device an operative movement and a return idle movement, and means for successively moving said carriers into register with said spraying device, said means operating during the idle movements of the spraying device and being inactive during the operative movements of the said spraying device.

6. In apparatus of the character described, the combination with a spraying device, of a carrier for the article to be coated, means for rotating the said carrier, means for relatively moving the spraying device and carrier transversely of the direction of rotation of the latter, the said means including a rotary drive shaft, and a fluid pressure control for the spraying device comprising a sleeve valve rotating with the drive shaft and operating in synchronism with the relative movement of the carrier and spraying device to intermittently admit and shut off the flow of fluid to said pressure control during said movement.

7. In apparatus of the character described, the combination with a spraying device, of a carrier for the article to be coated, means for rotating said carrier and means for relatively moving the spraying device and carrier transversely of the direction of rotation of the latter and with a decrease in speed at the center of such movement.

8. In apparatus of the character described, the combination with a spraying device, of a table and a series of spindles circularly arranged thereon, a plurality of tines carried at the top of each spindle, a drive shaft, a continuously rotating belt driven from said shaft, gears connecting the shaft and table and adapted to rotate the latter with a step by step movement to carry each spindle in succession into register with the spraying device, and a friction wheel carried by each spindle and moved into and out of contact with said belt during the rotation of the table.

9. In apparatus of the character described, the combination with an oscillatory spraying device, of a carrier for the article to be coated, a conduit for feeding a supply of fluid to the spraying device and adapted as an axial support for the spraying device, a valve for controlling the passage of liquid from the said spraying device, a fluid pressure control for the said valve, means for moving the carrier into and out of register with the spraying device including a drive shaft and a rotary valve operated by said drive shaft in synchronism with the movement of the carrier for intermittently shutting off the flow of fluid to said pressure control.

10. An apparatus for coating an article having a surface of double curvature comprising a support for the article, a nozzle for supplying the coating material, and actuable means for imparting a relative variable movement to the nozzle and article whereby a uniform coating of said surface is effected.

11. An apparatus for coating an article having a surface of double curvature comprising a support for the article, means for applying the coating material to the article and a variable control whereby a uniform coating is deposited over the surface of the article.

12. In apparatus of the character described, a support for the article to be coated, a spraying device, and means for rela-

tively moving the spraying device and support with variable speed.

13. In apparatus of the character described, a support for the article to be coated, means for rotating the support, a spraying device, and means for relatively moving the spraying device and support transversely of the direction of rotation of the latter and with variable speed.

Signed at Providence, in the county of Providence and State of Rhode Island, this 25th day of Sept., 1918.

LAURENCE R. DAVIS.