Nov. 10, 1970 W. R. McCARTY, JR., ET AL 3,540,039

WARNING DEVICE FOR AUTOMATIC WASHING AND DRYING MACHINES

Filed Oct. 16, 1967

Fig-1

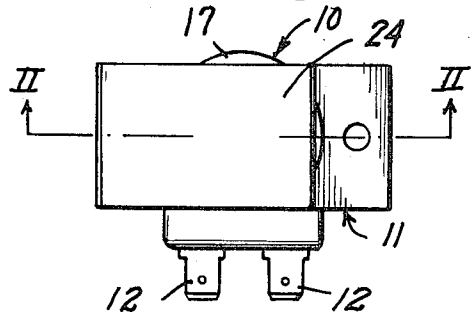

Fig-2

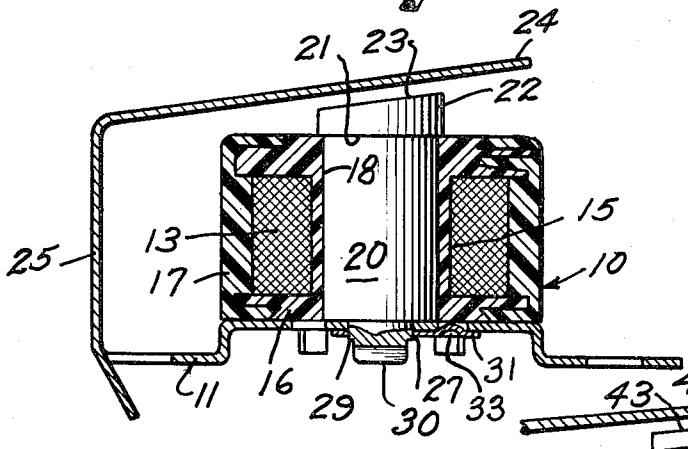

Fig-3

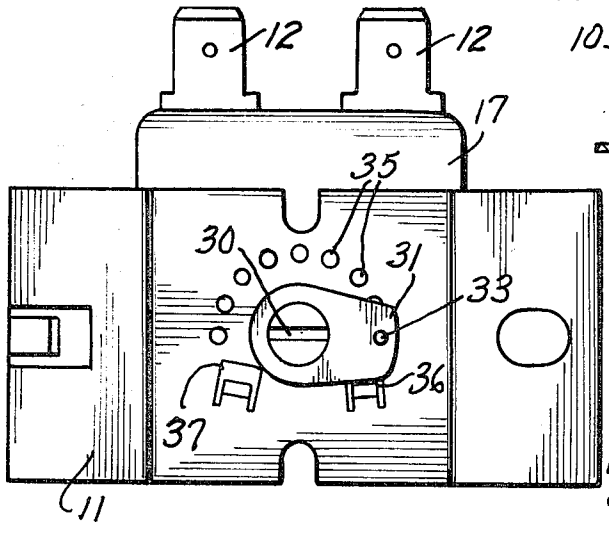

Fig-4

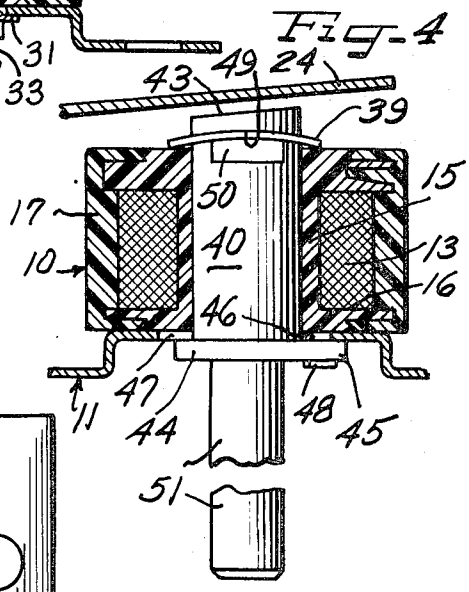

INVENTORS
William R. McCarty, Jr.
John William Hanna

BY Hill, Sherman, Meroni, Gross & Simpson ATTORNEYS

United States Patent Office 3,540,039 Patented Nov. 10, 1970

3,540,039

WARNING DEVICE FOR AUTOMATIC WASHING AND DRYING MACHINES

William Raymond McCarty, Jr., Skokie, and John W. Hanna, Barrington, Ill., assignors to The Dole Valve Company, Morton Grove, Ill., a corporation of Illinois

Filed Oct. 16, 1967, Ser. No. 675,587
Int. Cl. G10k 9/14
U.S. Cl. 340—392 11 Claims

ABSTRACT OF THE DISCLOSURE

Warning for automatic appliances such as washing machines, drying machines, dishwashers and the like, signalling the termination of a preselected washing or drying cycle. The signalling device comprises a buzzer connected in the timer of the washing machine or dryer, or in the case of washing machines, to the door switch of the washing machine. The buzzer includes an electromagnetic coil encapsulated in insulating material. A central pole piece extends through the center of the coil and is in association with the clapper arm extending over the pole piece. The clapper arm is formed integral with the mounting bracket for the electromagnetic coil and extends at a preselected angle with respect to the top of the coil. The pole piece has an angularly extending tip facing the clapper and is adjustable to vary the air gap between the clapper and pole piece and thereby vary the level of sound by the mere turning of the pole piece within its electromagnetic coil. The loudest sound is attained when the plane of the tip of the pole piece is parallel to the plane of the clapper and no sound is attained when the pole piece is turned 180°.

In carrying out the present invention, we mount a buzzer within the cabinet of an appliance and connect the buzzer in the energizing circuit for the appliance to give a warning at the termination of a preselected cycle, or upon unauthorized opening of the door of the machine. This indicates the termination of a washing or drying operation and is particularly advantageous for modern fabrics where it is desired to remove the fabrics prior to the spin cycle of the machine, or where it is desired to limit the spinning of the fabric. It is also particularly advantageous in dryers where it is desirable to remove modern fabrics at the termination of a drying operation prior to damage of the clothes by the heat remaining in the dryer.

The warning device may also be energized when the load within an automatic washing machine becomes unbalanced during the spin cycle to enable the operator of the machine to rebalance the load and prevent overloading the mechanism of the machine.

A principal object of the invention is to provide a simple and improved warning device of a fool-proof construction, which is operable to signal the termination of predetermined preselected cycles of operation of automatic appliances, such as automatic washing machines and dryers.

Another object of the invention is to provide a novel and improved warning device in the form of a simple buzzer in which the intensity of the sound may readily be varied at the selection of the operator of the machine.

A still further object of the invention is to provide an improved form of electromagnetic buzzer having a central pole projecting from the coil of the buzzer and having a tip extending at an angle to the plane of the adjacent surface of the coil, in which the clapper of the buzzer is inclined at the same plane as the angle of the tip of the pole piece and the intensity of the sound is

varied by turning the pole piece within the coil to vary the air gap between the pole piece and clapper in a simple and expeditious manner.

These and other objects of the invention will appear from time to time as the following specification proceeds and with reference to the accompanying drawings wherein:

FIG. 1 is a top plan view of a warning device constructed in accordance with the principles of the present invention;

FIG. 2 is a sectional view taken substantially along line II—II of FIG. 1;

FIG. 3 is a bottom plan view of the warning device showing the indexing spring and the manner in which the intensity of the sound may be adjusted, and

FIG. 4 is a sectional view similar to FIG. 2, but showing a modified form in which the invention may be embodied.

In the embodiment of the invention illustrated in the drawings, we have shown a buzzer **10** including a bracket **11** adapted to be mounted on the inside of a cabinet of a washing machine or dryer or other appliance and having terminals **12, 12** adapted to be connected in the timer circuit of the machine, particularly where the machine may be a dryer and it is desired to signal the termination of a delicate goods drying cycle. The terminals **12** also may be connected in the circuit to the door switch of an automatic washing machine to signal unauthorized opening of the door or may be connected to the timer circuit of the washing machine to signal the termination of a washing operation prior to the initiation of a spin-dry operation.

The buzzer **10** includes a coil **13** wound about a core **15** of a spool **16**, made from an insulating material. The spool **16**, coil **13** and terminals **12** are encapsulated in a plastic insulating material **17**, which may be a form of nylon plastic material or any other suitable material providing a moisture-tight casing for the electromagnetic coil **13**.

The core **15** of the spool **16** has a hollow interior portion **18** along which extends a pole piece **20**, forming the pole piece of the buzzer. The pole piece **20** has a downwardly facing shouldered portion **21** engaging the top surface of the upper flange of the spool **16** and has a tip portion **22** disposed thereabove and having an inclined face **23**, shown in FIGS. 1 and 2 as extending parallel to the adjacent face of an inclined clapper **24**.

The clapper **24** is shown as being formed integrally with a vertical leg **25** of the mounting bracket **11**. The vertical leg **25** is spaced a substantial distance outwardly of the cylindrical peripheral portion of the encapsulating insulating material and is bent inwardly along its upper end portion to form the inclined clapper **24**, and to space said clapper to extend in generally parallel relation with respect to the inclined tip **23** of the pole piece **20**, and to thereby provide an air gap effecting a buzzing sound as the clapper is drawn to and released from the tip of the pole piece **20** upon energization of the coil **13** with an alternating current.

The pole piece **20** may be made from steel or any other suitable material having a high magnetic permeability and the clapper **24** may be made from a similar material. The terminals **12, 12** are connected in an alternating current control circuit for the appliance to energize the coil **13** to intermittently bring the clapper **24** into engagement with the tip **23** of the pole piece **20** and create a buzzing sound.

The end of the pole piece **20** opposite from the tip **23** has a reduced diameter portion **27** extending therefrom and rotatably mounted in the bracket **11**. The reduced diameter portion **27** terminates into a second reduced diameter portion **29** having a slot **30** therein opening to

the bottom of the buzzer and accommodating turning of the pole piece within the core **15** to vary the angular relation between the sloping tip **22** of the pole piece and the undersurface of the clapper **24**. Turning the pole piece within the core **15** will thus change the air gap between said pole piece and clapper and vary the sound intensity of the buzzer. In the position shown in FIG. 2 there will be a maximum sound intensity. As the pole piece is turned 90°, the sound intensity will decrease until the sound stops entirely. The sound will stop in a minimum of 90° rotation and a maximum of 180° rotation.

A spring arm **31**, which may be made from a spring steel, serves as an indexing spring to index the positions of the pole piece and to hold the pole piece in a selected position of adjustment. As shown in FIG. 3, the spring arm **31** is mounted on the reduced diameter end portion **27** of the pole piece and is suitably locked thereto.

The spring arm has an embossment **33** adjacent its outer end portion shown as being in direct alignment with the slot **30**. The undersurface of the embossment **33** serves as a detent engageable with a series of recesses or holes **35** formed in the bracket **11** and extending therealong in an arc struck from the axis of adjustable movement of the pole piece **20** for substantially 180°, to index each position of the pole piece and accommodate the spring arm to hold the pole piece in a selected position of adjustment. Spaced stops **36** and **37** pressed outwardly from the bracket **11** are provided to limit adjustable movement of the pole piece from a position of maximum sound intensity of the buzzer to a shut-off position, when a high portion of the tip of the pole piece has been rotated 180°.

In the form of the invention illustrated in FIG. 4, the same part numbers will be applied to the same parts shown in the embodiment of the invention illustrated in FIGS. 1, 2 and 3.

The buzzer of FIG. 4 is like that shown in FIGS. 1, 2 and 3 except the pole piece and indexing arm or sector are integrally formed and a spring clip **39** is provided to retain the pole piece in a selected position of adjustment.

In this form of the invention a pole piece **40** extends through the core **15** of the spool **16** and has an inclined tip **43** in the plane of the clapper arm **24**, when the pole piece is in position to attain a maximum buzzing sound.

The pole piece **40** has a flange **44** abutting the underside of the bracket **11** and having an indexing sector **45** formed integrally therewith. The sector **45** has an integrally formed indexing lug **46** engageable with circumferentially spaced indexing recesses **47** formed in the bracket **11** and shown as being in the form of notches opening towards the pole piece **40** to index the position of the tip **43** of the pole piece with respect to the clapper blade **24**. A stop **48** extending from the bottom of the bracket **11** is provided to limit movement of the pole piece beyond 180°. The spring clip **39** engages shouldered portions **49** formed by diametrically opposite flattened portions **50** formed in the sides of the pole piece **40**, and not only serves to retain the pole piece **40** to the spool **16** but also serves to yieldably bias the indexing lug **46** into engagement with a selected recess **47**. The pole piece **40** also has a reduced diameter shaft portion **51** extending from the flange **44**, forming a mounting for a knob or lever (not shown), for moving the pole piece **40** into its various positions of adjustment.

While we have herein shown and described one form in which our invention may be embodied, it should be understood that various variations and modifications in the invention may be attained without departing from the spirit and scope of the novel concepts thereof.

We claim as our invention:

1. A signalling device adapted to signal the termination of preselected cycles of cleaning appliances comprising:

an electromagnetic coil adapted to be connected in the energizing circuit of the appliance and including a spool, having a coil wound thereon,

a clapper blade extending over said coil,

a pole piece extending through the center of said coil and held from movement along said coil,

said pole piece having a face facing said clapper blade of varying height from the top of said coil, and

said pole piece being adjustable within said coil about the axis of said coil, to vary the air gap between said face and clapper blade, and to thereby vary the intensity of the sound emitted by said signalling device.

2. The signalling device of claim **1** wherein the clapper blade extends at an angle with respect to the adjacent end of the coil and wherein means are provided to turn said pole piece within said coil and thereby vary the air gap between said pole piece and clapper blade.

3. A signalling device according to claim **2**

wherein the face of said pole piece facing said clapper blade extends in a plane parallel to the plane of said clapper blade in one position of said pole piece, and

wherein a spring blade extends from said pole piece, and detent means cooperating with said spring blade index said pole piece in its various positions of adjustment.

4. A signalling device according to claim **2**

wherein an indexing sector is formed integrally with said pole piece,

wherein said sector has an indexing lug thereon,

and wherein a spring clip mounted on said pole piece and engageable with said spool is provided to retain said pole piece to said spool and to bias said indexing lug into an indexing position.

5. The signalling device of claim **1** including a bracket for mounting said coil on the wall of an appliance and having an integral leg spaced from the periphery of said coil and extending parallel to the periphery of said coil and beyond the end of said coil, said leg having said clapper blade formed integrally therewith and extending therefrom at a preselected angle with respect to said leg.

6. A signalling device according to claim **5**

wherein said bracket has a plurality of indexing recesses formed therein,

wherein a spring blade extending from said pole piece has detent means thereon cooperating with said recesses, and is biased into engagement with said recesses by the resiliency of said spring blade to index said spring blade in its various positions of adjustment.

7. A signalling device according to claim **5**

wherein an indexing sector is formed integrally with said pole piece and extends radially therefrom,

wherein said bracket has a plurality of indexing recesses formed therein,

and wherein a spring clip on said pole piece engageable with said spool maintains said indexing sector into indexing engagement with said recesses.

8. In a signalling device particularly adapted for appliances for signalling the termination of a cycle of operation of the appliance,

an insulating spool having a hollow core,

an electromagnetic coil wound on said core,

a plastic casing encapsulating said coil,

terminals connected with opposite ends of said coil and encapsulated in said casing and extending therefrom,

at magnetically permeable pole piece extending along the hollow interior portion of said core and retained from axial movement along said core,

a bracket for said casing extending along one side thereof and adapted to mount said signalling device on an appliance cabinet, said bracket being made from a magnetically permeable material and having

a base portion abutting the base of said casing, a leg extending from said bracket at right angles with respect thereto in spaced relation with respect to the periphery of said casing and extending along said casing and pole piece beyond the opposite end of said coil from said base and having a

clapper blade forming a continuation thereof and extending over said coil and pole piece and angularly disposed with respect to the plane of the top of said coil, said pole piece having a face facing said clapper blade and of varying height from the top of said coil and in the plane of said clapper blade, and

means accommodating turning of said pole piece about its axis, to vary the position of the face of said pole piece relative to the plane of said clapper blade, and thereby vary the gap between the face of said pole piece and clapper blade.

9. A signalling device in accordance with claim **8** wherein the pole piece has a face facing said clapper blade at the angle of inclination of said clapper blade and parallel thereto in one position of said pole piece,

and wherein stop means are provided to limit turning of said pole piece from a position in which the face of said pole piece is parallel to said clapper blade to a diametrically opposed position in which no sound will be emitted from said signalling device.

10. The signalling device of claim **8** wherein the means accommodating turning of said pole piece comprises a slot in the end of said pole piece,

wherein a spring blade is mounted on the end of said pole piece and retains said pole piece to said bracket,

wherein circumferentially spaced recessed portions are provided in the base of said bracket between said stops and

wherein said spring blade has an embossment formed thereon pressed into engagement with selected of said holes by the resiliency of said spring blade, to index the position of said pole piece relative to said clapper blade and to hold said pole piece in a selected position of adjustment.

11. The signalling device of claim **8** wherein an indexing sector is formed integrally with said pole piece and extends radially therefrom,

wherein a plurality of indexing recesses are formed in said bracket for cooperation with said indexing sector and

wherein a spring clip on said pole piece engageable with said spool maintains said indexing sector in engagement with said indexing recesses.

References Cited

UNITED STATES PATENTS

3,070,791 12/1962 Rinker ---------- 340—392

ALVIN H. WARING, Primary Examiner

MICHAEL SLOBASKY, Assistant Examiner

U.S. Cl. X.R.

340—401, 402