(12) INTERNATIONAL APPLICATION PUBLISHED UNDER THE PATENT COOPERATION TREATY (PCT)

(19) World Intellectual Property Organization
International Bureau

(43) International Publication Date
22 February 2024 (22.02.2024)

WIPO | PCT

(10) International Publication Number
WO 2024/039705 A1

(51) International Patent Classification:
E21B 29/00 (2006.01) *E21B 47/06* (2006.01)
E21B 29/08 (2006.01) *E21B 47/04* (2006.01)
E21B 33/12 (2006.01)

(21) International Application Number:
PCT/US2023/030323

(22) International Filing Date:
16 August 2023 (16.08.2023)

(25) Filing Language: English

(26) Publication Language: English

(30) Priority Data:
17/820,563 17 August 2022 (17.08.2022) US

(71) Applicant: **BAKER HUGHES OILFIELD OPERATIONS LLC** [US/US]; 17021 Aldine Westfield, Houston, Texas 77073 (US).

(72) Inventor: **DAHLBERG, Knut Inge**; 17021 Aldine Westfield, Houston, Texas 77073 (US).

(74) Agent: **CHANDLER, Kimberly** et al.; Baker Hughes Oilfield Operations LLC, 14990 Yorktown Plaza Drive, Houston, Texas 77040 (US).

(81) Designated States *(unless otherwise indicated, for every kind of national protection available)*: AE, AG, AL, AM, AO, AT, AU, AZ, BA, BB, BG, BH, BN, BR, BW, BY, BZ, CA, CH, CL, CN, CO, CR, CU, CV, CZ, DE, DJ, DK, DM, DO, DZ, EC, EE, EG, ES, FI, GB, GD, GE, GH, GM, GT, HN, HR, HU, ID, IL, IN, IQ, IR, IS, IT, JM, JO, JP, KE, KG, KH, KN, KP, KR, KW, KZ, LA, LC, LK, LR, LS, LU, LY, MA, MD, MG, MK, MN, MU, MW, MX, MY, MZ, NA, NG, NI, NO, NZ, OM, PA, PE, PG, PH, PL, PT, QA, RO, RS, RU, RW, SA, SC, SD, SE, SG, SK, SL, ST, SV, SY, TH, TJ, TM, TN, TR, TT, TZ, UA, UG, US, UZ, VC, VN, WS, ZA, ZM, ZW.

(84) Designated States *(unless otherwise indicated, for every kind of regional protection available)*: ARIPO (BW, CV, GH, GM, KE, LR, LS, MW, MZ, NA, RW, SC, SD, SL, ST, SZ, TZ, UG, ZM, ZW), Eurasian (AM, AZ, BY, KG, KZ, RU, TJ, TM), European (AL, AT, BE, BG, CH, CY, CZ, DE, DK, EE, ES, FI, FR, GB, GR, HR, HU, IE, IS, IT, LT, LU, LV, MC, ME, MK, MT, NL, NO, PL, PT, RO, RS, SE, SI, SK, SM, TR), OAPI (BF, BJ, CF, CG, CI, CM, GA, GN, GQ, GW, KM, ML, MR, NE, SN, TD, TG).

(54) Title: DOWNHOLE CASING REMOVAL TOOL AND METHOD

FIG. 1

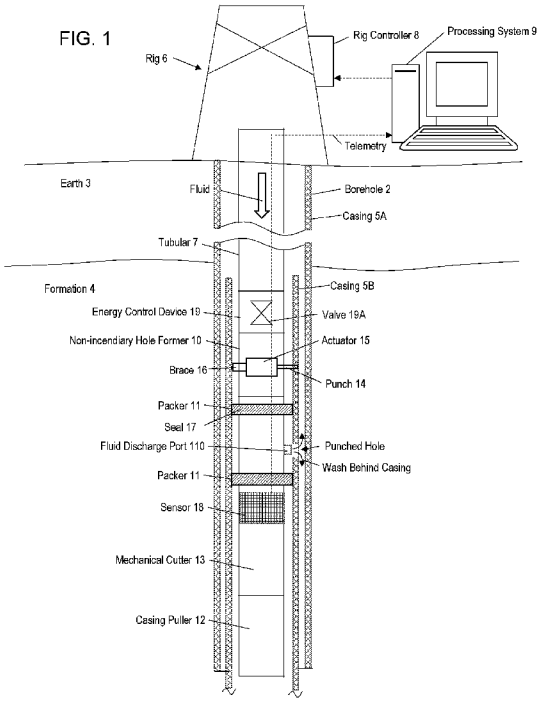

(57) Abstract: An apparatus for removing a casing from a borehole penetrating a formation in one run of the apparatus in the borehole includes: a carrier conveyed in the borehole; a nonincendiary hole former on the carrier to form a hole in the casing; a fluid discharge device on the carrier to discharge a fluid into the hole to wash an exterior portion of the casing; a casing puller on the carrier and having a casing grip to grip the casing to lift the casing or a portion of the casing out of the borehole; a mechanical cutter on the carrier to cut the casing; and a valve on the carrier to control fluid energy to least one of the non-incendiary hole former, the fluid discharge device, the casing puller, and the mechanical cutter.

WO 2024/039705 A1

[Continued on next page]

Declarations under Rule 4.17:

— *as to applicant's entitlement to apply for and be granted a patent (Rule 4.17(ii))*

— *as to the applicant's entitlement to claim the priority of the earlier application (Rule 4.17(iii))*

Published:

— *with international search report (Art. 21(3))*

DOWNHOLE CASING REMOVAL TOOL AND METHOD

CROSS REFERENCE TO RELATED APPLICATIONS

[0001] This application claims the benefit of U.S. Application No. 17/820563, filed on August 17, 2022, which is incorporated herein by reference in its entirety.

BACKGROUND

[0002] Boreholes drilled into earth formations for the extraction of hydrocarbons are typically lined with a casing or tubing. The casing for example prevents the formation wall from caving into the borehole and isolates different formation zones to prevent the flow or crossflow of formation fluids. In certain situations, when older wells are reused, the existing casing has to be removed in order to install new completions. The existing casing, however, may be difficult to remove due to scale or barite buildup exterior to the casing or the casing being cemented in place in the borehole. Unfortunately, it can take a considerable amount of time to remove the casings as various tools are run into and out of the boreholes. Hence, it would be well received in the hydrocarbon production industry if apparatuses and methods were developed to remove an existing casing lining a borehole in a more efficient manner.

BRIEF SUMMARY

[0003] Disclosed is an apparatus for removing a casing from a borehole penetrating a formation in one run of the apparatus in the borehole. The apparatus includes: a carrier configured to be conveyed in the borehole; a non-incendiary hole former disposed on the carrier and configured to form a hole in the casing; a fluid discharge device configured to discharge a fluid into the hole to wash an exterior portion of the casing; a casing puller disposed on the carrier and having a casing grip to grip the casing to lift the casing or a portion of the casing out of the borehole; a mechanical cutter disposed on the carrier and configured to cut the casing; and a valve disposed on the carrier and in fluid communication with at least one of the non-incendiary hole former, the fluid discharge device, the casing puller, and the mechanical cutter to control fluid energy to the at least one of the non-incendiary hole former, the fluid discharge device, the casing puller, and the mechanical cutter.

[0004] Also disclosed is a method for removing a casing from a borehole penetrating a formation in one run of casing removal apparatus through the borehole. The method includes: conveying a carrier through the borehole; forming a hole in the casing using a non-

incendiary hole former disposed on the carrier; washing an exterior portion of the casing through the hole using a fluid discharge device; lifting the casing having a washed exterior or a portion of the casing having the washed exterior using a casing puller disposed on the carrier; cutting the casing using a mechanical cutter disposed on the carrier in response to the casing puller not being able to lift the casing after the washing; lifting the cut casing using the casing puller; and controlling fluid energy to at least one of the non-incendiary hole former, the fluid discharge device, the casing puller, and the mechanical cutter using a valve disposed on the carrier.

BRIEF DESCRIPTION OF THE DRAWINGS

[0005] The following descriptions should not be considered limiting in any way. With reference to the accompanying drawings, like elements are numbered alike:

[0006] FIG. 1 is a cross-sectional view of an embodiment of a string of downhole tools and devices disposed in a borehole penetrating the earth;

[0007] FIG. 2 depicts aspects of a casing puller that is disposed in the string;

[0008] FIG. 3 depicts aspects of a mechanical cutter that is disposed in the string;

[0009] FIG. 4 is a flow chart for a method for removing a casing from a borehole penetrating the earth.

DETAILED DESCRIPTION

[0010] A detailed description of one or more embodiments of the disclosed apparatus and method presented herein by way of exemplification and not limitation with reference to the figures.

[0011] Disclosed are embodiments of apparatuses and methods for removing a casing from a borehole. The embodiments involve operating a string of various downhole tools and devices so that the casing can be removed in one run of the string, thus obviating the need to run various tools individually into the borehole and removing each one before the next tool is run. As a result, the casing can be removed in less time compared to the use of conventional techniques that involve using multiple tools individually.

[0012] The string of the various downhole tools and devices for one run casing removal are coupled to a carrier such as a tubular that can be a string of coupled pipes. The tubular can provide rotational energy as well as channel a fluid to one or more of these tools and devices for their operation. The tools and devices include a non-incendiary hole former such as a mechanical puncher, a packer, a casing puller, a mechanical cutter, and an energy

controller such as a valve. The non-incendiary hole former is configured to form a hole in the casing without the use of explosives. The packer is configured to isolate a section of the borehole containing the punched hole so that the fluid can wash an exterior portion of the casing to loosen the casing from the borehole wall. In general, several holes are punched along a length of casing that is desired to be removed with each hole being used as a wash outlet. In general, washing may include circulating the fluid where the fluid is pumped by a pump at the surface and down through the interior of the string. The fluid then flows through the punched holes into an annulus surrounding the exterior of the casing. From there, the fluid flows to the surface where it can be recirculated. The casing puller is configured to grip an internal portion of the casing and pull the casing toward the surface of the earth using hydraulic energy. If the casing will not move after the washing, then the mechanical cutter is used to cut through the casing at one or more locations and the casing puller (e.g., hydraulic jack) is used to remove each cut section. The energy controller is configured to control the energy provided to the various downhole tools and devices.

[0013] FIG. 1 illustrates a cross-sectional view of a borehole 2 penetrating the earth 3 having a formation 4, which contains a reservoir of hydrocarbons. The borehole 2 is lined with an outer casing 5A. An inner casing 5B to be removed lines the interior of the outer casing 5A. A tubular operating rig 6 is configured to operate a tubular 7, which in one or more embodiments is a tubular string. In one or more embodiments, operating the tubular 7 includes raising, lowering, and/or rotating the tubular 7 in addition to pumping a fluid through the tubular 7 in order to operate or control one or more downhole tools and devices coupled to the tubular 7. The tubular operating rig 6 includes a rig controller 8 that is configured to control the various tubular operations. A computer processing system 9 is configured to execute a rig control algorithm in order to provide inputs to the rig controller 8 for sequencing operations for removing the casing 5B from the borehole 2. The term "carrier" is used to represent any carrying device such as the tubular 7 for conveying the downhole tools and devices through the borehole 2. It can be appreciated that the disclosed downhole tools and devices may also be used to remove the casing 5A.

[0014] A downhole sensor 18 may be disposed on the tubular 7 for sensing one or more properties within the casing 5A, 5B and/or the borehole 2. Non-limiting embodiments of the downhole sensor 18 include an imaging sensor such as a camera with appropriate lighting, a pressure sensor, a temperature sensor, a depth sensor, a radiation sensor, a vibration sensor, a chemical sensor, an accelerometer, and/or an acoustic sensor. Sensed data from the sensor 18 is transmitted uphole by telemetry to a receiver at the surface such as the

computer processing system 9. The sensed data may be used for positioning and operating the various downhole tools and devices. For example, the sensed data may be used to identify a cement top or stuck point to determine an optimal cut location or to locate casing collars to avoid punching these collars.

[0015] Coupled to the tubular 7 is a non-incendiary hole former 10, a packer 11, a casing puller 12, and a mechanical cutter 13. The term "non-incendiary hole former" relates to not using any explosive devices to form a hole in the casing 5. In one or more embodiments, the non-incendiary hole former 10 may include a punch 14 coupled to an energy converter or actuator 15, which converts energy to movement of the punch 14 to punch one or more holes in the casing 5. In one or more embodiments, the actuator 15 mechanically converts motion of the tubular 7 such as up and down jarring motion to movement of the punch 14 using a mechanical linkage. In one or more embodiments, the actuator 15 uses hydraulic energy to move the punch 14. In other embodiments, the actuator 15 may convert other types of energy such as an electromagnetic pulse for example to movement of the punch 14. In one or more embodiments, the actuator 15 extends a brace 16 to fix in place the non-incendiary hole former 10 while the one or more holes are being formed or punched into the casing 5.

[0016] The packer 11 includes a seal 17 to seal the tubular 7 to the casing having the one or more holes punched therein. In one or more embodiments, the seal 17 can be an expandable volume made of a pliable material such as an elastomer. Alternatively, the seal 17 can be a solid pliable material. The seal 17 can make contact with the tubular 7 and the interior of the casing 5B having the one or more punched holes in order to isolate the interior annulus (between the tubular 7 and the interior of the casing 5B) from uphole of the packer 11 and from the interior annulus downhole of the packer 11. By using two packers 11, the one or more punched holes can be isolated such that fluid channeled by the tubular 7 can be directed to the punched hole or holes to wash and flush out an exterior portion of the casing 5B using a fluid discharge device 110 such as a fluid discharge port. Debris can be washed out by circulation of the fluid from the tubular 7, through the one or more punched holes, and to the surface through the exterior portion of the casing 5B. It can be appreciated that circulation may provide an indication that the exterior portion of the casing 5B is sufficiently washed and free of adhesion such that the casing 5B may be pulled out of the borehole 2.

[0017] An energy control device 19 is configured to control energy to one or more of the downhole tools and devices. In embodiments where the energy is in the form of a moving

fluid or pressurized fluid (e.g., hydraulic energy), the energy control device can be a valve 19A.

[0018] It can be appreciated that while FIG. 1 illustrates one embodiment of the order of positioning of the downhole tools and devices, these downhole tools and devices may be positioned in other orders in other embodiments. In the other embodiments, the rig controller 8 and the computer processing system 9 can account for the different orders when operating and controlling the downhole tools and devices.

[0019] FIG. 2 depicts aspects of the casing puller 12. The casing puller 12 includes extendable slips 20 that extend to grip the casing 5A. In embodiments for removing the casing 5A from the borehole 2, the extendable slips 20 may extend to grip the wall of the borehole 2. The casing puller 12 also includes a casing grip 21 that is configured to grip the casing 5B that is to be lifted. In one or more embodiments, the casing grip 21 includes extendable fingers 22 that engage the casing 5B or portion of the casing 5 that is to be lifted. The casing puller 12 further includes a casing puller actuator 23 such as a hydraulic piston that is mechanically coupled to the casing grip 21 so as to lift the casing 5B when energy is applied to the actuator 23. By sequencing operation of the slips 20 and the casing puller actuator 23, the casing 5B can be lifted to the surface of the earth where it can be removed from the borehole 2.

[0020] FIG. 3 depicts aspects of the mechanical cutter 13 in a cross-sectional view. The mechanical cutter 13 includes a cutting tool 30 such as a circular blade 31 and/or a longitudinal blade 32. The circular blade 31 may be extended by a blade actuator (not shown) and rotated by a motor 33, which can be hydraulically or electrically powered. Once the circular blade 31 is extended, the tool body may be rotated to enable the blade 31 to circumferentially cut through the whole casing. The longitudinal blade 32 may be extended by the motor 33 in one or more embodiments to engage the casing 5B where rotation of the tool body can used to cut through the casing 5B. A mechanical pipe cutter (MPC tm) tool is commercially available from Baker Hughes Incorporated and is disclosed in US Patent 9,410,389, which is incorporated herein by reference in its entirety.

[0021] FIG. 4 is a flow chart for a method 40 for removing a casing from a borehole penetrating a formation in one run of casing removal apparatus through the borehole. Block 41 calls for conveying a carrier through the borehole. In one or more embodiments, the carrier is a tubular. Block 42 calls for forming a hole in the casing using a non-incendiary hole former disposed on the carrier. In one or more embodiments, the non-incendiary hole former is a mechanical hole former that includes a mechanical punch and an actuator to move

the punch. Block 43 calls for isolating a section of the borehole having the hole using a packer disposed on the carrier. Block 44 calls for washing an exterior portion of the casing through the hole using a fluid discharge device. Fluid that enters the annulus defined by the packer or packers is thus forced through the punched hole to wash the exterior portion. Block 45 calls for lifting the casing having a washed exterior or a portion of the casing having the washed exterior using a casing puller disposed on the carrier. In one or more embodiments, lifting includes extending a slip from the casing puller to a surface of an outer casing or a wall of the borehole to fix the casing puller in place, gripping the casing to be pulled with a casing grip, and energizing an actuator that lifts the casing grip. Block 46 calls for (i) cutting the casing using a mechanical cutter disposed on the carrier in response to the casing puller not being able to lift the casing a desired amount after the washing and (ii) lifting the cut casing using the casing puller. In one or more embodiments, cutting the casing includes extending at least one of a circular blade and a longitudinal blade from a body of the mechanical cutter. It can be appreciated that the above blocks may be performed in any of several orders depending on the actual downhole conditions.

[0022] The method 40 may also include iterating any of the hole forming, the washing, and the cutting if at any point the casing puller is not able to lift and remove the casing completely from the borehole or a desired amount. Circulation of fluid through the tubular and into an annulus exterior to the casing may provide indication or confirmation that the casing can be removed by lifting.

[0023] The method 40 may further include controlling energy to at least one of the non-incendiary hole former, the packer, the casing puller, and the mechanical cutter using an energy control device. In one or more embodiments, the energy is hydraulic energy and the method 40 may further include controlling a position of a valve to control the hydraulic energy.

[0024] The method 40 may further include setting a packer above the non-incendiary hole former before a hole is formed in a casing if the possibility exists of pressurized trapped gases being released into the casing through the hole. Additionally, a second packer may be set below the non-incendiary hole former before the hole is formed in order to retain the released pressurized gas between the two packers.

[0025] The disclosure herein provides several advantages. One advantage is that the time for removing a casing from a borehole is reduced with the associated cost savings compared to conventional methods because the casing can be removed with one run of the carrier through the borehole. Another advantage is that the use of the non-incendiary hole

former precludes the use of explosives to perforate the casing and the accompanying precautions and associated costs with their use. Also, perforations can deform casing couplings requiring a surface cutter to cut the casing apart thus adding to time and costs.

[0026] Set forth below are some embodiments of the foregoing disclosure:

[0027] Embodiment 1: An apparatus for removing a casing from a borehole penetrating a formation in one run of the apparatus in the borehole, the apparatus comprising: a carrier configured to be conveyed in the borehole, a non-incendiary hole former disposed on the carrier and configured to form a hole in the casing, a fluid discharge device configured to discharge a fluid into the hole to wash an exterior portion of the casing, a casing puller disposed on the carrier and comprising a casing grip to grip the casing to lift the casing or a portion of the casing out of the borehole, a mechanical cutter disposed on the carrier and configured to cut the casing, and a valve disposed on the carrier and in fluid communication with at least one of the non-incendiary hole former, the fluid discharge device, the casing puller, and the mechanical cutter to control fluid energy to the at least one of the non-incendiary hole former, the fluid discharge device, the casing puller, and the mechanical cutter.

[0028] Embodiment 2: The apparatus according to any prior embodiment wherein the non-incendiary hole former comprises a mechanical punch that extends to punch the hole in the casing.

[0029] Embodiment 3: The apparatus according to any prior embodiment further comprising a hydraulic actuator configured to move the mechanical punch.

[0030] Embodiment 4: The apparatus according to any prior embodiment wherein the casing puller comprises a hydraulic actuator.

[0031] Embodiment 5: The apparatus according to any prior embodiment wherein the casing puller further comprises a slip configured to engage a wall surrounding the slip.

[0032] Embodiment 6: The apparatus according to any prior embodiment further comprising a packer disposed on the carrier and comprising a seal to contact an interior wall of the casing to isolate a section of the casing having the hole.

[0033] Embodiment 7: The apparatus according to any prior embodiment wherein the packer comprises a first packer disposed above the hole and a second packer disposed below the hole.

[0034] Embodiment 8: The apparatus according to any prior embodiment wherein the valve is in fluid communication with the packer.

[0035] Embodiment 9: The apparatus according to any prior embodiment wherein the mechanical cutter comprises a cutter blade configured to cut the casing.

[0036] Embodiment 10: The apparatus according to any prior embodiment wherein the cutter blade comprises at least one of a circular blade and a longitudinal blade.

[0037] Embodiment 11: The apparatus according to any prior embodiment wherein the mechanical cutter comprises a hydraulic motor configured to operate the cutter blade.

[0038] Embodiment 12: The apparatus according to any prior embodiment further comprising a sensor disposed on the carrier, the sensor comprising at least one of an imaging sensor, a pressure sensor, a temperature sensor, a depth sensor, a radiation sensor, a vibration sensor, a chemical sensor, an accelerometer, and/or an acoustic sensor.

[0039] Embodiment 13: The apparatus according to any prior embodiment further comprising a processing system for processing data received from the sensor via telemetry.

[0040] Embodiment 14: The apparatus according to any prior embodiment wherein the carrier comprises a tubular string.

[0041] Embodiment 15: A method for removing a casing from a borehole penetrating a formation in one run of casing removal apparatus through the borehole, the method comprising: conveying a carrier through the borehole, forming a hole in the casing using a non-incendiary hole former disposed on the carrier, washing an exterior portion of the casing through the hole using a fluid discharge device, lifting the casing having a washed exterior or a portion of the casing having the washed exterior using a casing puller disposed on the carrier, cutting the casing using a mechanical cutter disposed on the carrier in response to the casing puller not being able to lift the casing after the washing, lifting the cut casing using the casing puller, and controlling fluid energy to at least one of the non-incendiary hole former, the fluid discharge device, the casing puller, and the mechanical cutter using a valve disposed on the carrier.

[0042] Embodiment 16: The method according to any prior embodiment wherein washing comprises identifying circulation of the fluid through the carrier to the hole and through an annulus directly exterior to the casing to the surface.

[0043] Embodiment 17: The method according to any prior embodiment further comprising isolating an interior section of the casing having the hole using a first packer disposed on the carrier above the hole and a second packer disposed on the carrier below the hole.

[0044] Embodiment 18: The method according to any prior embodiment further comprising setting a first packer above the non-incendiary hole former and a second packer below the non-incendiary hole former before the hole is formed.

[0045] Embodiment 19: The method according to any prior embodiment wherein lifting comprises extending a slip from the casing puller to fix the casing puller in place by engaging a wall surrounding the slip, gripping the casing to be pulled with a casing grip, and energizing an actuator that lifts the casing grip.

[0046] In support of the teachings herein, various analysis components may be used, including a digital and/or an analog system. For example, the rig controller 8 and/or the computer processing system 9 may include digital and/or analog systems. The system may have components such as a processor, storage media, memory, input, output, communications link (wired, wireless, optical or other), user interfaces (e.g., a display or printer), software programs, signal processors (digital or analog) and other such components (such as resistors, capacitors, inductors and others) to provide for operation and analyses of the apparatus and methods disclosed herein in any of several manners well-appreciated in the art. It is considered that these teachings may be, but need not be, implemented in conjunction with a set of computer executable instructions stored on a non-transitory computer readable medium, including memory (ROMs, RAMs), optical (CD-ROMs), or magnetic (disks, hard drives), or any other type that when executed causes a computer to implement the method of the present invention. These instructions may provide for equipment operation, control, data collection and analysis and other functions deemed relevant by a system designer, owner, user or other such personnel, in addition to the functions described in this disclosure.

[0047] Further, various other components may be included and called upon for providing for aspects of the teachings herein. For example, a power supply, magnet, electromagnet, sensor, electrode, transmitter, receiver, transceiver, antenna, controller, optical unit or components, electrical unit or electromechanical unit may be included in support of the various aspects discussed herein or in support of other functions beyond this disclosure.

[0048] Elements of the embodiments have been introduced with either the articles "a" or "an." The articles are intended to mean that there are one or more of the elements. The terms "including" and "having" and the like are intended to be inclusive such that there may be additional elements other than the elements listed. The conjunction "or" when used with a list of at least two terms is intended to mean any term or combination of terms. The term "configured" relates one or more structural limitations of a device that are required for the device to perform the function or operation for which the device is configured.

[0049] The flow diagram depicted herein is just an example. There may be many variations to this diagram or the steps (or operations) described therein without departing from the scope of the invention. For example, operations may be performed in another order or other operations may be performed at certain points without changing the specific disclosed sequence of operations with respect to each other. All of these variations are considered a part of the claimed invention.

[0050] The disclosure illustratively disclosed herein may be practiced in the absence of any element which is not specifically disclosed herein.

[0051] While one or more embodiments have been shown and described, modifications and substitutions may be made thereto without departing from the scope of the invention. Accordingly, it is to be understood that the present invention has been described by way of illustrations and not limitation.

[0052] It will be recognized that the various components or technologies may provide certain necessary or beneficial functionality or features. Accordingly, these functions and features as may be needed in support of the appended claims and variations thereof, are recognized as being inherently included as a part of the teachings herein and a part of the invention disclosed.

[0053] While the invention has been described with reference to exemplary embodiments, it will be understood that various changes may be made and equivalents may be substituted for elements thereof without departing from the scope of the invention. In addition, many modifications will be appreciated to adapt a particular instrument, situation or material to the teachings of the invention without departing from the essential scope thereof. Therefore, it is intended that the invention not be limited to the particular embodiment disclosed as the best mode contemplated for carrying out this invention, but that the invention will include all embodiments falling within the scope of the appended claims.

What is claimed is:

1. An apparatus for removing a casing (5A,B) from a borehole (2) penetrating a formation (3) in one run of the apparatus in the borehole (2), the apparatus characterized by:

a carrier (7) configured to be conveyed in the borehole (2);

a non-incendiary hole former (10) disposed on the carrier (7) and configured to form a hole in the casing (5A,B);

a fluid discharge device (110) configured to discharge a fluid into the hole to wash an exterior portion of the casing (5A,B);

a casing puller (12) disposed on the carrier (7) and including a casing grip (21) to grip the casing (5A,B) to lift the casing (5A,B) or a portion of the casing (5A,B) out of the borehole (2);

a mechanical cutter (13) disposed on the carrier (7) and configured to cut the casing (5A,B); and

a valve (19A) disposed on the carrier (7) and in fluid communication with at least one of the non-incendiary hole former (10), the fluid discharge device (110), the casing puller (12), and the mechanical cutter (13) to control fluid energy to the at least one of the non-incendiary hole former (10), the fluid discharge device (110), the casing puller (12), and the mechanical cutter (13).

2. The apparatus according to claim 1, wherein the non-incendiary hole former (10) includes a mechanical punch (14) that extends to punch the hole in the casing (5A, B).

3. The apparatus according to claim 2, further including a hydraulic actuator (15) configured to move the mechanical punch (14).

4. The apparatus according to claim 1, wherein the casing puller (12) includes a hydraulic actuator.

5. The apparatus according to claim 1, wherein the casing puller (12) further includes a slip (20) configured to engage a wall surrounding the slip (20).

6. The apparatus according to claim 1, further including a packer (11) disposed on the carrier (7) and including a seal (17) to contact an interior wall of the casing (5A,B) to isolate a section of the casing (5A,B) having the hole.

7. The apparatus according to claim 6, wherein the packer (11) includes a first packer disposed above the hole and a second packer disposed below the hole.

8. The apparatus according to claim 6, wherein the valve is in fluid communication with the packer (11).

9. The apparatus according to claim 1, wherein the mechanical cutter (13) includes a cutter blade configured to cut the casing (5A,B).

10. The apparatus according to claim 9, wherein the cutter blade includes at least one of a circular blade (31) and a longitudinal blade.

11. The apparatus according to claim 9, wherein the mechanical cutter (13) includes a hydraulic motor configured to operate the cutter blade (32).

12. The apparatus according to claim 1, further comprising a sensor (18) disposed on the carrier, the sensor (18) including at least one of an imaging sensor, a pressure sensor, a temperature sensor, a depth sensor, a radiation sensor, a vibration sensor, a chemical sensor, an accelerometer, and/or an acoustic sensor.

13. The apparatus according to claim 12, further including a processing system (9) for processing data received from the sensor via telemetry.

14. The apparatus according to claim 1, wherein the carrier (7) includes a tubular string.

15. A method for removing a casing from a borehole (2) penetrating a formation (3) in one run of casing removal apparatus through the borehole (2), the method incuding:

conveying a carrier through the borehole (2);

forming a hole in the casing (5A,B) using a non-incendiary hole former (10) disposed on the carrier (7);

washing an exterior portion of the casing (5A,B) through the hole using a fluid discharge device (110);

lifting the casing (5A,B) having a washed exterior or a portion of the casing (5A,B) having the washed exterior using a casing puller (12) disposed on the carrier (7);

cutting the casing (5A,B) using a mechanical cutter (13) disposed on the carrier (7) in response to the casing puller (12) not being able to lift the casing (5A,B) after the washing;

lifting the cut casing (5A,B) using the casing puller (12); and

controlling fluid energy to at least one of the non-incendiary hole former (10), the fluid discharge device (110), the casing puller (12), and the mechanical cutter (13) using a valve disposed on the carrier (7).

FIG. 1

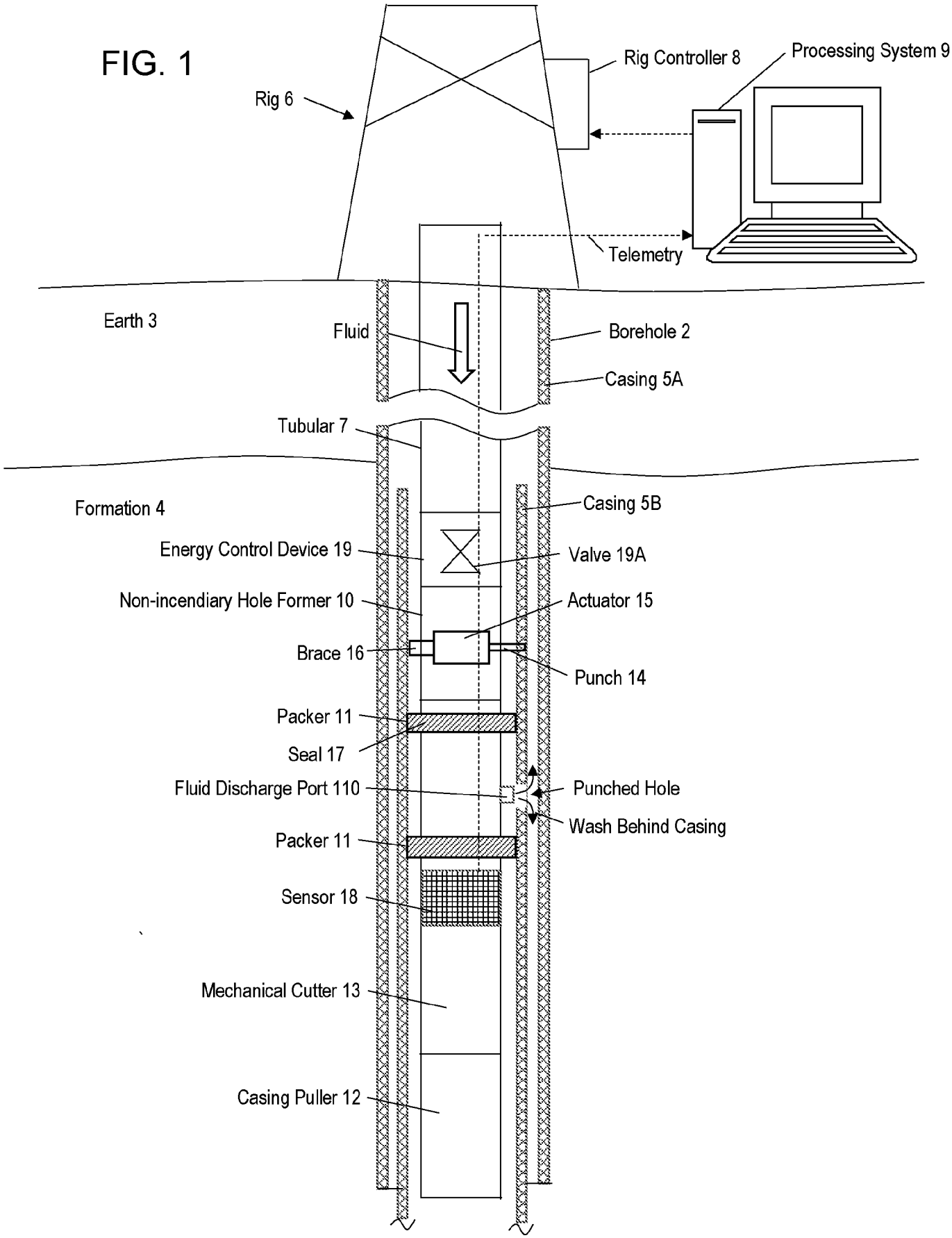
Rig 6
Rig Controller 8
Processing System 9
Telemetry
Earth 3
Fluid
Borehole 2
Casing 5A
Tubular 7
Formation 4
Casing 5B
Energy Control Device 19
Valve 19A
Non-incendiary Hole Former 10
Actuator 15
Brace 16
Punch 14
Packer 11
Seal 17
Fluid Discharge Port 110
Punched Hole
Wash Behind Casing
Packer 11
Sensor 18
Mechanical Cutter 13
Casing Puller 12

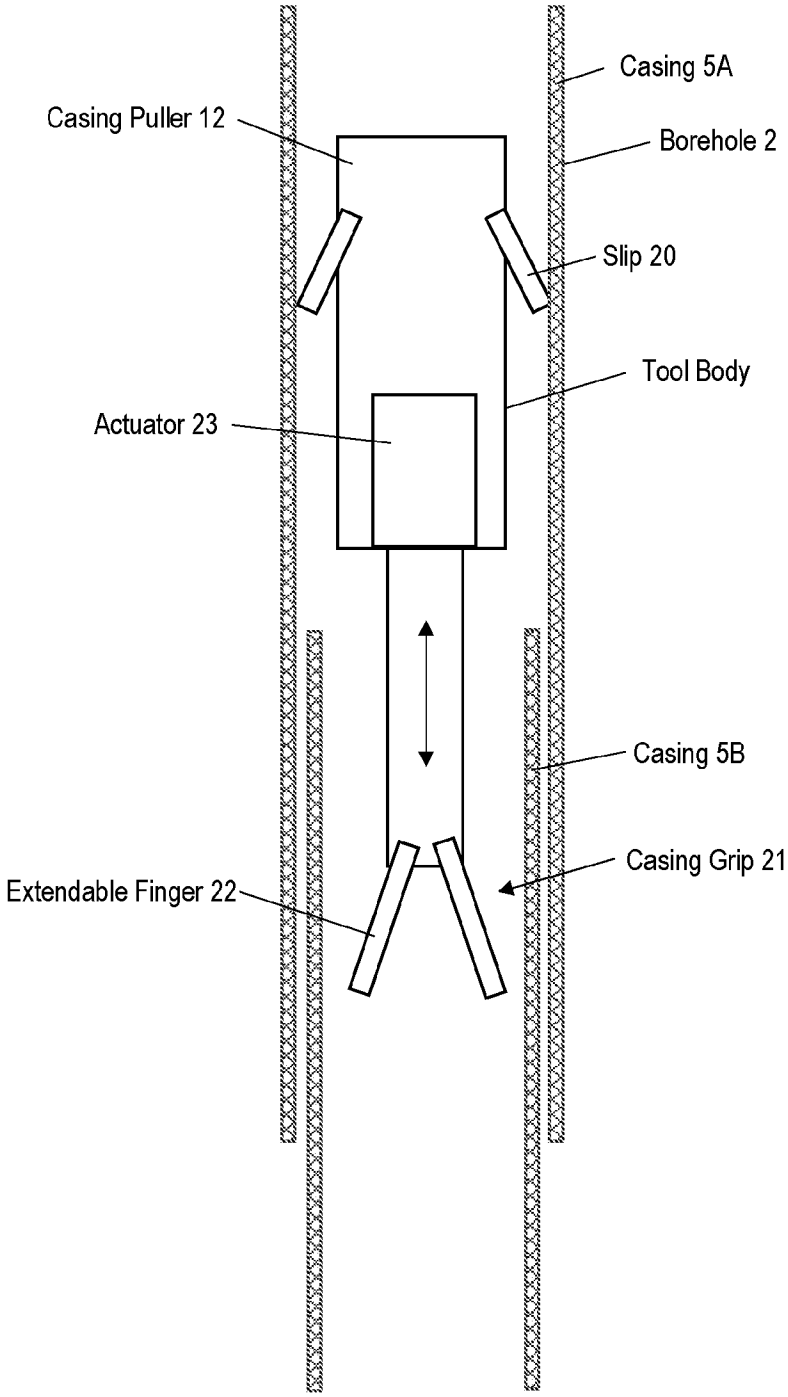
Casing 5A
Casing Puller 12
Borehole 2
Slip 20
Tool Body
Actuator 23
Casing 5B
Casing Grip 21
Extendable Finger 22

FIG. 2

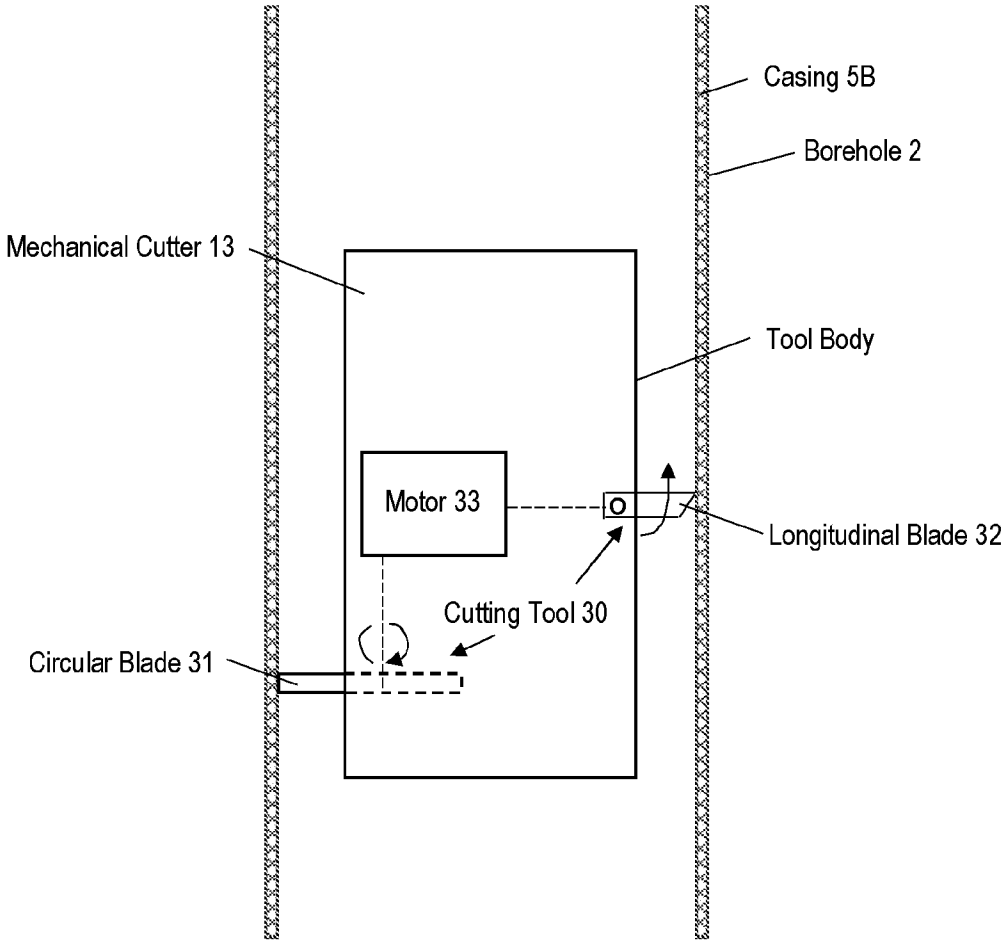
Casing 5B
Borehole 2
Mechanical Cutter 13
Tool Body
Motor 33
Longitudinal Blade 32
Cutting Tool 30
Circular Blade 31

FIG. 3

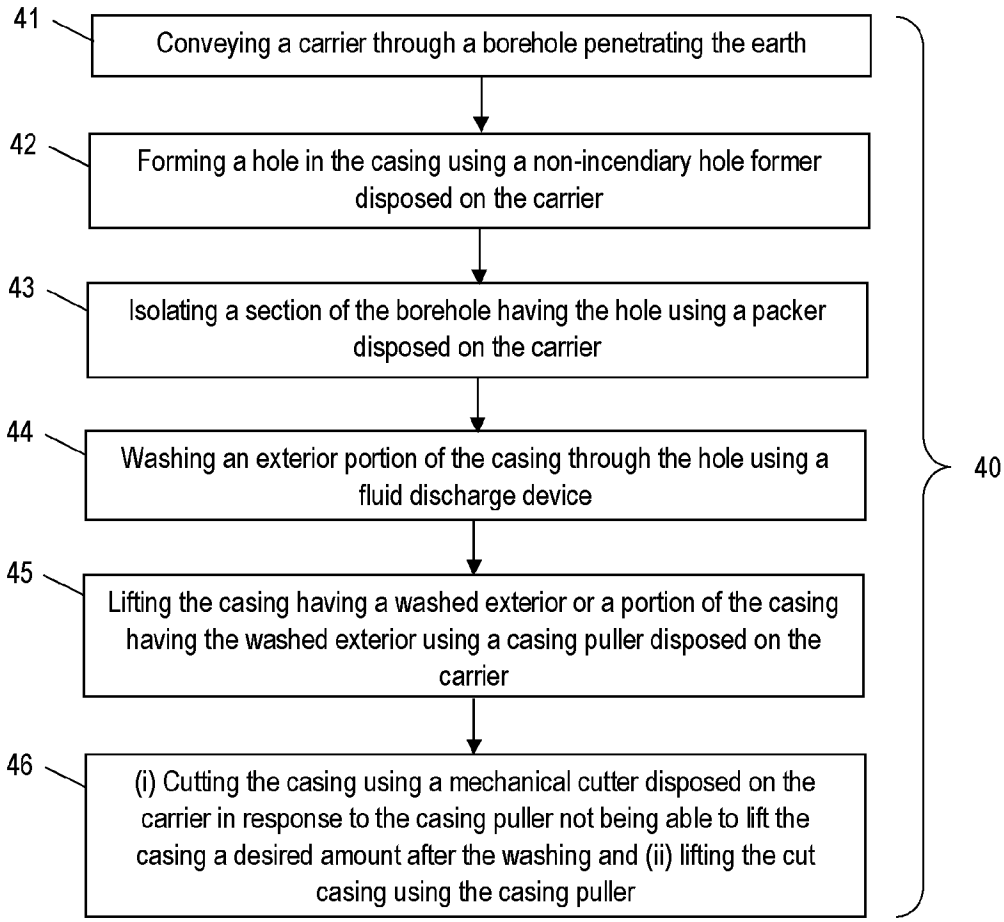
41
Conveying a carrier through a borehole penetrating the earth
42
Forming a hole in the casing using a non-incendiary hole former disposed on the carrier
43
Isolating a section of the borehole having the hole using a packer disposed on the carrier
44
Washing an exterior portion of the casing through the hole using a fluid discharge device
45
Lifting the casing having a washed exterior or a portion of the casing having the washed exterior using a casing puller disposed on the carrier
46
(i) Cutting the casing using a mechanical cutter disposed on the carrier in response to the casing puller not being able to lift the casing a desired amount after the washing and (ii) lifting the cut casing using the casing puller
40

FIG. 4

INTERNATIONAL SEARCH REPORT

International application No.
PCT/US2023/030323

A. CLASSIFICATION OF SUBJECT MATTER

E21B 29/00(2006.01)i; **E21B 29/08**(2006.01)i; **E21B 33/12**(2006.01)i; **E21B 47/06**(2006.01)i; **E21B 47/04**(2006.01)i

According to International Patent Classification (IPC) or to both national classification and IPC

B. FIELDS SEARCHED

Minimum documentation searched (classification system followed by classification symbols)

E21B 29/00(2006.01); E21B 23/01(2006.01); E21B 31/20(2006.01); E21B 34/12(2006.01); E21B 37/00(2006.01)

Documentation searched other than minimum documentation to the extent that such documents are included in the fields searched

Korean utility models and applications for utility models
Japanese utility models and applications for utility models

Electronic data base consulted during the international search (name of data base and, where practicable, search terms used)

eKOMPASS(KIPO internal) & Keywords: casing, remove, carrier, non-incendiary hole former, fluid discharge device, casing puller, mechanical cutter, valve

C. DOCUMENTS CONSIDERED TO BE RELEVANT

Category*	Citation of document, with indication, where appropriate, of the relevant passages	Relevant to claim No.
X	WO 2020-256563 A1 (ARCHER OILTOOLS AS) 24 December 2020 (2020-12-24) pages 3-9, 11, 13 and figures 1-11	1-15
A	US 2016-0130901 A1 (HYDRAWELL INC.) 12 May 2016 (2016-05-12) claims 14-20 and figures 2-7	1-15
A	US 2017-0022773 A1 (SMITH INTERNATIONAL, INC.) 26 January 2017 (2017-01-26) figures 1-8	1-15
A	US 2020-0347687 A1 (ARDYNE HOLDINGS LIMITED) 05 November 2020 (2020-11-05) figures 1-6	1-15
A	EP 2990591 A1 (UNIVERSITY OF STAVANGER) 02 March 2016 (2016-03-02) claims 1-2	1-15

☐ Further documents are listed in the continuation of Box C.

☑ See patent family annex.

* Special categories of cited documents:
"A" document defining the general state of the art which is not considered to be of particular relevance
"D" document cited by the applicant in the international application
"E" earlier application or patent but published on or after the international filing date
"L" document which may throw doubts on priority claim(s) or which is cited to establish the publication date of another citation or other special reason (as specified)
"O" document referring to an oral disclosure, use, exhibition or other means
"P" document published prior to the international filing date but later than the priority date claimed
"T" later document published after the international filing date or priority date and not in conflict with the application but cited to understand the principle or theory underlying the invention
"X" document of particular relevance; the claimed invention cannot be considered novel or cannot be considered to involve an inventive step when the document is taken alone
"Y" document of particular relevance; the claimed invention cannot be considered to involve an inventive step when the document is combined with one or more other such documents, such combination being obvious to a person skilled in the art
"&" document member of the same patent family

Date of the actual completion of the international search	Date of mailing of the international search report
29 November 2023	**29 November 2023**

Name and mailing address of the ISA/KR	Authorized officer
Korean Intellectual Property Office **189 Cheongsa-ro, Seo-gu, Daejeon** **35208, Republic of Korea**	**PARK, Tae Wook**
Facsimile No. **+82-42-481-8578**	Telephone No. **+82-42-481-3405**

INTERNATIONAL SEARCH REPORT
Information on patent family members

International application No.
PCT/US2023/030323

Patent document cited in search report	Publication date (day/month/year)	Patent family member(s)	Publication date (day/month/year)
WO 2020-256563 A1	24 December 2020	GB 2600286 A	27 April 2022
		GB 2600286 B	03 May 2023
		NO 20190740 A1	18 December 2020
		NO 346193 B1	11 April 2022
US 2016-0130901 A1	12 May 2016	WO 2016-077435 A1	19 May 2016
US 2017-0022773 A1	26 January 2017	GB 2528187 A	13 January 2016
		GB 2528187 B	26 July 2017
		NO 20151041 A1	13 August 2015
		NO 342005 B1	12 March 2018
		US 10513901 B2	24 December 2019
		US 2014-0251616 A1	11 September 2014
		US 2017-0298704 A9	19 October 2017
		US 9464496 B2	11 October 2016
		WO 2014-138117 A1	12 September 2014
US 2020-0347687 A1	05 November 2020	AU 2017-355225 A1	02 May 2019
		AU 2017-355225 B2	05 January 2023
		BR 112019008256 A2	02 July 2019
		BR 112019008256 B1	22 June 2021
		CA 3040245 A1	11 May 2018
		DK 3494277 T3	01 February 2021
		EA 038304 B1	06 August 2021
		EA 201990660 A1	31 October 2019
		EP 3494277 A1	12 June 2019
		EP 3494277 B1	09 December 2020
		EP 3779118 A1	17 February 2021
		GB 2556461 A	30 May 2018
		GB 2556461 B	30 January 2019
		GB 2570402 A	24 July 2019
		GB 2570402 B	08 April 2020
		MX 2019004641 A	17 June 2019
		NO 20181490 A1	21 November 2018
		NO 344192 B1	07 October 2019
		US 10781653 B2	22 September 2020
		US 11193343 B2	07 December 2021
		US 2019-0257168 A1	22 August 2019
		WO 2018-083473 A1	11 May 2018
EP 2990591 A1	02 March 2016	None	