PCT WORLD INTELLECTUAL PROPERTY ORGANIZATION
International Bureau

INTERNATIONAL APPLICATION PUBLISHED UNDER THE PATENT COOPERATION TREATY (PCT)

(51) International Patent Classification 6 : H04Q 7/28, 7/38

A2

(11) International Publication Number: WO 96/19906

(43) International Publication Date: 27 June 1996 (27.06.96)

(21) International Application Number: PCT/US95/16329

(22) International Filing Date: 15 December 1995 (15.12.95)

(30) Priority Data:
359,691 20 December 1994 (20.12.94) US

(71) Applicant: ERICSSON INC. [US/US]; One Triangle Drive, Research Triangle Park, NC 27709 (US).

(72) Inventors: JANKY, William, O.; 124 Foxwood Drive, Goode, VA 24556 (US). GULLIFORD, Philip, C.; 634 Tall Oaks Terrace, Longwood, FL 32750 (US). HELVEY, Clayton, F.; Route 1, Box 886A, Blue Ridge, VA 24064 (US). KAPPAGANTULA, Satish; 103 Dumnomia Court, Cary, NC 27513 (US). LAMPE, Ross, W.; 2408 White Oak Road, Raleigh, NC 27609 (US). WALDROUP, Anthony, B.; 2425 Compton Place, Suwanee, GA 30174 (US).

(74) Agent: LASTOVA, John, R.; Nixon & Vanderhye P.C., 1100 North Glebe Road, Arlington, VA 22201-4714 (US).

(81) Designated States: AL, AM, AT, AU, BB, BG, BR, BY, CA, CH, CN, CZ, DE, DK, EE, ES, FI, GB, GE, HU, IS, JP, KE, KG, KP, KR, KZ, LK, LR, LS, LT, LU, LV, MD, MG, MK, MN, MW, MX, NO, NZ, PL, PT, RO, RU, SD, SE, SG, SI, SK, TJ, TM, TT, UA, UG, UZ, VN, European patent (AT, BE, CH, DE, DK, ES, FR, GB, GR, IE, IT, LU, MC, NL, PT, SE), OAPI patent (BF, BJ, CF, CG, CI, CM, GA, GN, ML, MR, NE, SN, TD, TG), ARIPO patent (KE, LS, MW, SD, SZ, UG).

Published
Without international search report and to be republished upon receipt of that report.

(54) Title: A TRUNKED RADIO FREQUENCY COMMUNICATION SYSTEM FOR ACCOMMODATING BOTH FREQUENCY AND TIME DIVISION BASED RF COMMUNICATIONS

(57) Abstract

In a trunked radio communications system, apparatus and methods are provided for transparently updating existing frequency division multiple access (FDMA) communications facilities to accommodate time division multiple access (TDMA) communications. TDMA channels are added to existing FDMA sites on an individual basis to increase spectral efficiency and capacity while still being compatible with existing FDMA equipment and protocols. For example, the existing FDMA control channel and protocols are used by dual mode sites and dual mode radios. A dual mode radio transceiver selectively participates in trunked radio communications in either an FDMA mode and in a TDMA mode. Each dual mode radio includes a memory for storing a mode identifier identifying each channel as an FDMA or a TDMA working channel. When a channel assignment is made, the dual mode radio determines from that channel mode identifier stored in memory whether to operate in the FDMA or TDMA mode for that particular communication. Moreover, dual mode radios expedite synchronization to a TDMA working channel (time slot) using a timing relationship established between the FDMA control channel and the TDMA working channels. In the context of multiple site, trunked radio communications, the present invention provides for interoperability between sites and radios which have TDMA communications capabilities and sites and radios which have only FDMA capabilities.

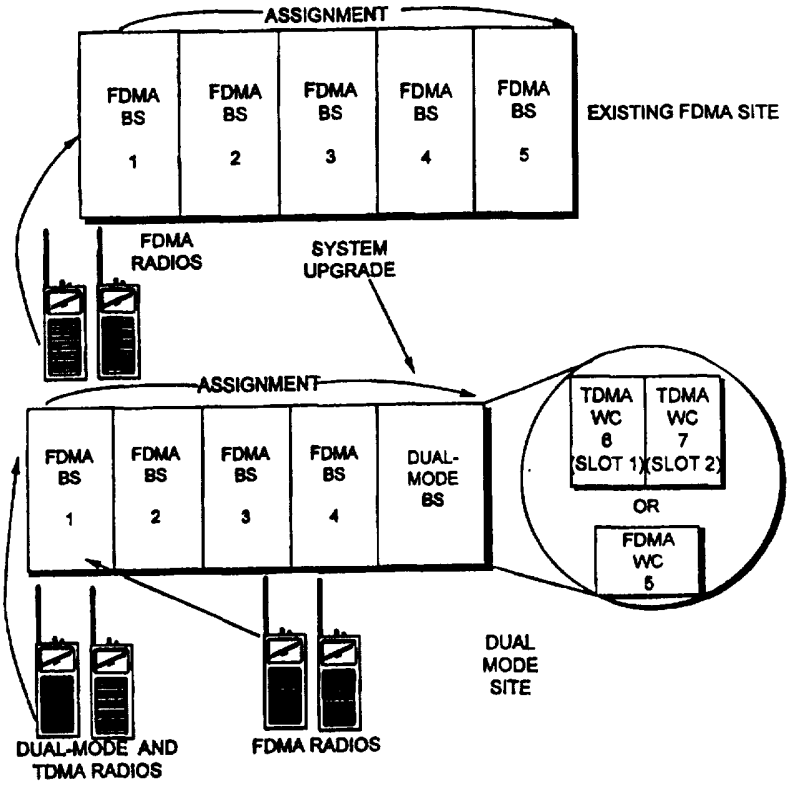

FOR THE PURPOSES OF INFORMATION ONLY

Codes used to identify States party to the PCT on the front pages of pamphlets publishing international applications under the PCT.

AT	Austria	**GB**	United Kingdom	**MR**	Mauritania
AU	Australia	**GE**	Georgia	**MW**	Malawi
BB	Barbados	**GN**	Guinea	**NE**	Niger
BE	Belgium	**GR**	Greece	**NL**	Netherlands
BF	Burkina Faso	**HU**	Hungary	**NO**	Norway
BG	Bulgaria	**IE**	Ireland	**NZ**	New Zealand
BJ	Benin	**IT**	Italy	**PL**	Poland
BR	Brazil	**JP**	Japan	**PT**	Portugal
BY	Belarus	**KE**	Kenya	**RO**	Romania
CA	Canada	**KG**	Kyrgystan	**RU**	Russian Federation
CF	Central African Republic	**KP**	Democratic People's Republic of Korea	**SD**	Sudan
CG	Congo			**SE**	Sweden
CH	Switzerland	**KR**	Republic of Korea	**SI**	Slovenia
CI	Côte d'Ivoire	**KZ**	Kazakhstan	**SK**	Slovakia
CM	Cameroon	**LI**	Liechtenstein	**SN**	Senegal
CN	China	**LK**	Sri Lanka	**TD**	Chad
CS	Czechoslovakia	**LU**	Luxembourg	**TG**	Togo
CZ	Czech Republic	**LV**	Latvia	**TJ**	Tajikistan
DE	Germany	**MC**	Monaco	**TT**	Trinidad and Tobago
DK	Denmark	**MD**	Republic of Moldova	**UA**	Ukraine
ES	Spain	**MG**	Madagascar	**US**	United States of America
FI	Finland	**ML**	Mali	**UZ**	Uzbekistan
FR	France	**MN**	Mongolia	**VN**	Viet Nam
GA	Gabon				

A TRUNKED RADIO FREQUENCY COMMUNICATION SYSTEM FOR ACCOMMODATING BOTH FREQUENCY AND TIME DIVISION BASED RF COMMUNICATIONS

FIELD OF THE INVENTION

The present invention relates to radio frequency (RF) trunked communication systems, and more particularly, to an RF trunked communication system which accommodates both frequency and time division based RF communications.

BACKGROUND AND SUMMARY OF THE INVENTION

Current trunked radio communication systems utilize analog modulation to transmit analog audio signals over a single radio frequency. One such existing land mobile trunked radio communication system is the Enhanced Digital Access Communication System (EDACS) provided by Ericsson GE Mobile Communication Inc. In the EDACS system, radios obtain access to analog frequency modulation (FM) based working channels over which analog voice is transmitted using a common digital control channel for controlling radio access to the working channels.

As shown in Figure 1, trunked mobile communications are carried out using analog FM base station repeaters centrally located in a fairly large geographical area referred to as a "site" on the order of 2000 square miles, e.g. corresponding to a radius of about 25-30 miles. Base station repeaters receive analog, frequency modulated signals representing the speech of the person speaking into the transmitting mobile radio unit 10A on one frequency F1 and

retransmit the signal to other receiving mobile radio units 10B within the site area on another frequency F2. These two frequencies F1 and F2, known as a "frequency pair," make up an analog FM base station repeater "channel." Accordingly, each base station repeater in a site is assigned its own frequency pair or channel. For ease of description and subsequent distinction from time slot based channels described below, a radio communication where one frequency carries a single radio subscriber communication is referred to as a frequency division multiple access (FDMA) communication.

Digital information, such as digitized encrypted speech and digital data, may also be transmitted using a single analog base station repeater with the RF carrier being modulated with digital rather than analog signals. One common digital modulation technique is frequency shift keying (FSK) where the frequency of the RF carrier is slightly increased or decreased depending on whether the digital information has a high or low logic value. Access to an FDMA working channel (and therefore an FDMA base station repeater) is coordinated through a common FDMA digital control channel using frequency shift keying modulation of digital control bits and an appropriate RF protocol access technique. One RF protocol access technique used in the EDACS system is slotted ALOHA.

The advent of digital cellular systems in Europe (GSM) and in the United States (ADC) has increased awareness of and interest in digital radios. The main impetus driving digital technology in cellular systems is the desire for spectral efficiency and increased capacity, i.e. more users per RF channel. Similarly, trunked radio communications used in land mobile radio applications like police,

fire, and other public safety environments also require increased capacity and more efficient use of channel bandwidth.

Significant interest has been shown in the cellular phone industry in a digital mode of operation in which time division multiple access (TDMA) techniques segment a single frequency carrier into consecutive repetitive frames of time slots with each slot in a frame so that plural voice communications occupy a single frequency. Since in the FDMA mode, a single frequency supports only one user at a time, TDMA achieves a significant increase in capacity by supporting multiple users on a single frequency. For ease of description and distinction from FDMA communications, such digital, time slotted type communications are referred to as TDMA communications.

Despite the advantages of TDMA communications, huge investments in existing FDMA systems make it economically impractical to immediately replace the existing FDMA systems with TDMA systems. The problem then is one of integrating digital TDMA technology into existing FDMA based land mobile radio systems. Optimally, the new technology would be integrated in a transparent fashion to minimize impact on existing users but would nonetheless provide the advantages of the new technology, e.g. increased capacity per unit bandwidth. It would be even better if the new technology could be integrated incrementally such as by adding one TDMA base station/channel at a time. Furthermore, the newly added TDMA equipment should be "backwards compatible" with existing FDMA equipment so that TDMA radios can operate on FDMA channels.

The present invention provides methods and apparatus which transparently integrate TDMA capabilities to existing trunked, FDMA-based, communications systems to achieve the benefits of TDMA technology while minimizing the impact on existing FDMA land mobile radio communication infrastructures.

A trunked radio repeater communication system includes a control channel repeater and plural working channel repeaters. One of the working channel repeaters is a conventional frequency division multiple access (FDMA) repeater transmitting on an RF frequency. Another of the working channel repeaters is a dual mode repeater that selectively operates in one mode as a time division multiple access (TDMA) working channel corresponding to one of plural time slots time division multiplexed onto a single RF frequency or in another mode as a FDMA repeater corresponding to an RF frequency. The dual mode repeater includes a dual mode transceiver for participating in trunked radio communications over the FDMA working channel in the FDMA mode and for participating in trunked radio communications over the TDMA working channel in the TDMA mode. When the dual mode repeater receives a working channel assignment and determines the mode of operation for the assigned working channel, the dual mode transceiver is operated in the appropriate FDMA or TDMA mode.

A dual mode radio for use in a trunked radio repeater communications system includes a dual mode transceiver for participating in trunked radio communications over the FDMA working channel in an FDMA mode and for participating in trunked radio communications over a TDMA working channel in a TDMA mode. The dual mode radio includes a memory for storing an

identification of each potential working channel as an FDMA working channel or a TDMA working channel. A request for a channel is made using the same control channel, (in one embodiment an FDMA control channel), irrespective of the type of working channel that is ultimately assigned. When the dual mode radio receives a working channel assignment over the control channel, it determines the assigned working channel identification, and from that channel identification, determines the mode corresponding to that channel in the memory and operates the dual mode transceiver accordingly.

Such dual mode radios quickly and reliably establish synchronization with an assigned TDMA working channel corresponding to a particular time slot on a radio frequency by establishing a relationship between a time when FDMA control channel frames are generated and a time when TDMA working channel time slots are generated in the RF working channel. Each control channel frame includes frame synchronization bits, and each time slot includes slot synchronization bits. The established relationship may be, for example, a consistent periodic alignment of the control channel frame synchronization bits and the time slot synchronization bits. By using the control channel frame synchronization bits as a reference, the dual mode transceiver determines the most likely point in a received, working channel bit stream where the time slot synchronization bits will align with the frame synchronization bits.

A site controller stores for each radio a radio identification number and a corresponding mode indicator indicating whether the radio can communicate on a slotted working channel or is limited to communications using a single frequency working channel. When the

site controller receives requests for working channels over a control channel from a particular radio, the site controller assigns either a slotted or a single frequency working channel by detecting the radio identification of the requesting radio and looking up in memory the stored corresponding mode indicator. Radio talk groups are also assigned identification numbers with corresponding mode indicators. As a result, the mode of group calls is set up as it is for individual radio-to-radio calls using the identification number of the group.

The present invention advantageously adapts an existing FDMA trunked radio communication system, which includes a plurality of base station repeaters with one repeater being a control channel repeater through which radios request access to a working channel and plural FDMA base station repeaters that provide FDMA working channels, to incorporate one or more TDMA working channels by adding one or more TDMA base station repeaters. Thereafter, each trunked radio communication request is analyzed to determine whether or not it is to be carried out on an FDMA or a TDMA working channel so that the trunked radio communication is assigned to an FDMA base station repeater for an FDMA call or to a TDMA base station repeater for a TDMA call.

The channel numbering scheme of an existing FDMA trunked radio communications system may also be modified to add TDMA working channels without having to rework the existing channel numbering plan. The first set of channel numbers already assigned to single frequency FDMA communication channels in the existing trunked radio communication system is maintained. A second, additional set of channel numbers is assigned as dual mode working channels that can function either as an FDMA working channel or a

TDMA working channel depending on a selected mode of communication.

The present invention also extends to multiple site trunked radio communications systems and provides interoperability between single mode FDMA sites and dual mode sites servicing single mode FDMA radios and dual mode radios. A multisite switch connected to each sites routes information between those sites to permit trunked communications between radios located in different sites geographical areas. For example, a radio operating in an FDMA mode located in a geographical area corresponding to one site communicates via the multisite switch with a radio or group of radios operating in a TDMA mode located in a geographical area corresponding to another site.

Specifically, a conversion interface module is connected to the switch and converts communications in an analog format used in FDMA communications into a digital encoded format used in TDMA communications and converts communications in the digital encoded format into the analog format. For example, the conversion interface module permits an FDMA transceiver to participate in multisite, digital encoded communications with one or more TDMA radio transceivers. Digital vocoded TDMA communications that involve an FDMA radio transceiver on another site are routed through the switch to the conversion interface module where the vocoded communications are decoded and transmitted from the multisite switch in analog form to the FDMA radio via its corresponding site. Thus, the present invention permits TDMA↔TDMA, FDMA↔FDMA, and FDMA↔TDMA trunked radio communications in a multisite environment.

BRIEF DESCRIPTION OF THE DRAWINGS

These and other features and advantages of the invention will be readily apparent to one of ordinary skill in the art from the following written description, read in conjunction with the drawings, in which:

FIGURE 1 is a high level diagram of a single site, trunked RF communication system;

FIGURE 2 is a high level diagram of a dual mode, single site trunked communications system which accommodates FDMA and TDMA communications in accordance with the present invention;

FIGURE 3 shows a frame and slot structure for plural TDMA working channels over a single frequency and a relationship between a FDMA control channel sync fields and sync fields in TDMA working channel time slots;

FIGURES 4(a) and 4(b) show a TDMA frame and time slot format, respectively, for inbound and outbound TDMA working channel time slots;

FIGURE 5 is a flow chart diagram illustrating TDMA radio synchronization procedures in accordance with the present invention;

FIGURE 6 is a function block diagram of a dual mode radio transceiver;

FIGURE 7 is a function block diagram of RF circuitry that may be used in the dual mode radio and in TDMA base stations;

FIGURES 8 and 9 are function block diagrams illustrating digital signal processor implementations of a dual mode transmitter and receiver for the dual mode radio shown in Figure 5;

FIGURE 10 is a function block diagram further illustrating additional aspects of the transceiver architecture of the dual mode radio;

FIGURE 11 is a function block diagram of a dual mode site that includes both FDMA and dual mode working channel base stations;

FIGURE 12 is a function block diagram of a dual mode working channel base station;

FIGURE 13 illustrates a procedure for upgrading an existing FDMA site into a dual mode site to accommodate both FDMA and TDMA radio communications;

FIGURE 14 illustrates a channel numbering scheme to accommodate both FDMA and TDMA radio communications;

FIGURES 15(a) and 15(b) are flow chart diagrams illustrating channel assignment procedures;

FIGURE 16 is a function block diagram of a trunked, multisite radio communications system with both FDMA mode and dual mode sites; and

FIGURE 17 is a flowchart diagram illustrating how multisite calls involving FDMA and TDMA radios, groups, and base stations are processed.

DETAILED DESCRIPTION OF THE DRAWINGS

In the following description, for purposes of explanation and not limitation, specific details are set forth, such as particular block diagrams, interfaces, techniques, etc. in order to provide a thorough understanding of the present invention. However, it will be apparent to one skilled in the art that the present invention may be practiced in other embodiments that depart from these specific details. In other instances, detailed descriptions of well known methods, devices, circuits, etc. are omitted so as not to obscure the description of the present invention with unnecessary detail.

Figure 2 is a high level diagram showing a single "dual mode" trunked RF communications site that accommodates frequency channel (FDMA) and time slot channel (TDMA) communications. Dual mode mobile radio unit 16A operates in either an FDMA or a TDMA communications mode and requests a TDMA working channel using the FDMA control channel via FDMA control channel repeater 12. FDMA control channel repeater 12 assigns either an FDMA base station repeater 14 or a TDMA base station repeater 18 based on the nature of the call request. FDMA calls are transmitted over the air in traditional fashion, e.g., for analog voice -- frequency modulated,

and for digitized voice/digital data -- frequency shift keyed onto a carrier frequency. TDMA calls are in all digital format and are transmitted during one of plural time slots using a spectrally efficient digital modulation technique such as $\pi/4$-differential quadrature phase shift keying ($\pi/4$-DQPSK) or continuous phase modulation (CPM). Dual mode radio units therefore communicate with existing FDMA radio units and groups of radios using existing FDMA base station repeaters and with TDMA radios and groups using TDMA base station repeaters.

In a typical communication scenario, when a dual-mode radio makes a call request, that request indicates the radio and/or group identification numbers (IDs) involved in the call. As is well known in trunked communications, a radio user selects a group on his radio by turning the knob or pushing a button which causes that radio's ID to be logged into a database maintained at the site controller and an overall systems manager via an RF control channel message for this particular talk group. This tells the communications system that a radio belonging to this group is located in a particular site, and therefore, if a multisite call (described in more detail below) originates in another site, the system knows to bring up a channel at this particular site to include this particular radio user in the group call.

More specifically, when the initiating radio's push-to-talk (PTT) button is activated, a communication request for a working channel including the appropriate originating individual radio ID and radio group ID (or destination radio ID for radio to radio calls) are transmitted over the existing FDMA control channel to a dual mode site controller which controls both FDMA and TDMA base station

repeaters. A database of individual radio and group identification numbers (IDs) is maintained at the site controller and system manager. The site controller uses that database to determine which type of base station repeater to assign to the call by accessing the capabilities of the source and destination radios and/or radio groups to be involved in the call which are also stored in the database for each radio and group. If a TDMA group is requested or an individual radio to radio call is requested between two dual mode radio units, then a channel assignment may be made by the dual mode site controller to an available TDMA frequency and slot associated with an available digital TDMA base station repeater which corresponds to a TDMA working channel.

The Dual Mode Principle: FDMA and TDMA Working Channels

A basic principle of dual mode telecommunications in the present invention is the selective use of FDMA working channels and TDMA working channels based on working channel availability and the capabilities of those radios involved in a call. An FDMA working channel is a single frequency for accommodating analog FM voice or digital FSK digitized voice and data. A TDMA working channel is a sequence of packets of digitized voice or digital data communicated on a single frequency over one of a plurality of time divided slots with each time slot corresponding to a communications channel. Dual mode, as used in the context of the present invention is the capability of a radio transceiver (either a portable transceiver such as a mobile or portable radio or a stationary transceiver such as a base station repeater) to transmit and receive both voice and "data" (such as facsimile data) over either an FDMA or a TDMA working channel. Dual mode radios can be used with the existing FDMA site/repeater infrastructure, with new TDMA base station repeaters added to

existing FDMA repeaters to increase capacity and spectral efficiency, and of course with new, all TDMA sites which have the greatest capacity/efficiency.

Figure 3 illustrates the format of the TDMA working channel slot format and the FDMA digitized control channel that is used to coordinate working channel requests, grants, and drops. The FDMA control channel is divided into a plurality of consecutive frames with each frame being for example thirty milliseconds in length. Each frame includes synchronization bits and a data field. The synchronization bits include for example dotting bits and Barker codes to permit radios tuned to the FDMA control channel to obtain synchronization. The data fields include control message bits for coordinating trunked radios communications and may be formatted as described in U.S. Patent 4,905,302 incorporated hereby by reference. Although not shown here, there are both outbound and inbound (relative to the base station) FDMA control channel frequencies for radios to transmit/receive digital control information via the FDMA control channel to/from the FDMA control channel base station repeater. Figure 3 shows the outbound control channel.

Also shown in Figure 3 is a digital TDMA working channel comprised of a sequence of time slots, each time slot containing synchronization and data fields. In the working channel, the "data" bits include the actual content of the message/call including digitized speech and raw data from a facsimile, personal computer, etc. In the instant embodiment, two time slots are shown interleaved on a single frequency in 40 millisecond frames. Each time slot is repeated, therefore, every 40 milliseconds. Additional time slots, e.g. three, four, etc. could be included per frame to provide additional TDMA

channels on one frequency thereby further increasing capacity and spectral efficiency.

Figure 3 illustrates a preferred synchronized relationship between the thirty millisecond TDMA control channel frame and the forty millisecond digital TDMA working channel frame comprising time slots 1 and 2. The frames are aligned so that the start of the synchronization bits of the FDMA control channel frame regularly and periodically align with the start of the synchronization bits of the digital TDMA working channel. For example, in Fig. 3, the sync bits of every fourth frame of the control channel align with the sync bits of every third frame of the working channel. This synchronized relationship is used advantageously in the present invention to permit dual mode radios to quickly obtain synchronization to an assigned TDMA digital working channel, i.e. frequency and time slot, using the alignment of sync fields between the FDMA frame and a TDMA time slot as described in further detail below in conjunction with Fig. 5.

Figures 4(a) and 4(b) illustrate example inbound and outbound TDMA time slot formats. Like the FDMA control channel, each TDMA working channel corresponds to a transmit and receive pair of time slots on respective offset transmit and receive carrier frequencies. Typically, the carriers are in the 800 to 900 MHz range with the center frequencies of each pair offset by 45 MHz, and each working channel occupies approximately 12.5 or 25 KHz of bandwidth. In addition to the outbound and inbound transmit and receive frequencies being offset (in frequency), the receive and transmit time slots are offset (in time) by one time slot to prevent overlap of the time slots as shown in Fig. 4(a). TDMA base station

repeaters in a dual mode site broadcast over plural time slots. Once a dual mode radio obtains synchronization with the outbound TDMA working channel using the synchronization bits of the FDMA control channel, the radio automatically calculates the appropriate transmit time for its assigned inbound working channel time slot based on the time slot offset.

Within each TDMA time slot, bits are allocated to certain functions. Bits in the ramp time field (R) allow the mobile/portable radio to power up its RF circuitry. Ramp bits are not necessary on an outbound channel because the TDMA base station transmits continuously on all time slots, i.e. the RF circuitry is usually not powered down. The sync bits (SYNC) are binary patterns of bits (or words) used for synchronization and time slot identification. The SYNC words are chosen to maximize autocorrelation properties and to minimize cross correlation properties with SYNC words of different time slots. The voice/data field contains either voice or data bits pertaining to the actual content of the communication. Forward error correction (FEC) overhead bits are preferably added to protect the voice/data. The digitized voice/data can be encrypted or unencrypted (clear). The slow associated control channel (SACCH) field includes control information sent simultaneously with the voice/data. SACCH data preferably replace sub-audible data used in existing FDMA land mobile radio (LMR) systems such as the EDACS system described above and provide various LMR functions such as priority scan.

Guard time (G) relates to the fact that the inbound time slots are synchronized and transmitted with an offset from their associated outbound time slots. Because radios are usually at varying distances from a TDMA base station, there are varying delays between the

times at which each time slot in a TDMA working channel frame will arrive at the TDMA base station repeater. Unfortunately, the different delays result in overlap of the inbound time slots. The number of guard time bits is set to compensate for the maximum amount of overlap that could occur with units operating up to certain distance from the site. In other words, the overlapping bits are not used to communicate substantive information but simply to allow for time slot overlap that would interfere with the substantive slot bits conveying part of the call message.

In high speed data applications, such as facsimile transmissions, multiple time slots may be assigned to a single user. For example, a user places a call request using a reserved ID stored in the site database that identifies the call based as a multiple time slot request. In this mode of operation, the time slot format is adaptively changed to a "super" time slot format by removing some of the redundant fields. Alternatively, low speed text messages may be transmitted as part of the SACCH signalling. Either or both provide an enhanced ability to increase data throughput.

A particularly advantageous radio synchronization technique which can be used by a dual mode radio to quickly obtain synchronization with a TDMA working channel in accordance with one aspect of the present invention will now be described in conjunction with the flow chart illustrated in Figure 5. All radios, including dual mode radios, monitor the FDMA control channel frequency for control channel messages, e.g., channel assignment messages. Thus, before any working channel synchronization can take place, the radio must first demodulate the control channel (block 1000) and detect (and maintain) control channel synchronization

using known techniques such as those employed in the EDACS system described above (block 1002). Control then branches off into two loops.

One loop begins at block 1004 where automatic frequency control functions are performed. In theory, the demodulated control channel information should be received at a particular bit rate such as 9600 bits per second. The automatic frequency control function in block 1004 receives a feedback control channel bit rate, which although it should ideally be at the same bit rate as the demodulated control channel information, i.e. 9600 bits per second in this example, it often times is not. Any difference in bits per second is determined by the automatic frequency control function with a correction value being applied to the master clock 1006 frequency. This frequency feedback correction is similar to a phase lock loop. A frame clock generator 1008 then divides down the master clock frequency to generate a frame and time slot clocking signals. For example, a TDMA working channel frame clock signal is generated in the preferred embodiment 40 milliseconds while an FDMA control channel frame clock is generated once every 30 milliseconds. In addition, a TDMA working channel time slot clock may be generated once every twenty milliseconds.

The other control branch from sync detection and maintenance block 1002 proceeds to control channel message extraction block 1012. Once the control channel message is extracted, the radio determines from identification bits in the demodulated control channel message whether or not that message, e.g., a TDMA channel assignment, is directed for a dual mode radio in decision block 1014. If not, the radio continues to monitor the control channel in block

1000. However, if the channel assignment message is for this radio, the radio tunes to the assigned TDMA working channel frequency in block 1016 and begins to demodulate bits received on the TDMA working channel in block 1018. At this point, the radio does not yet have synchronization with the TDMA working channel.

Based on the TDMA frame clock signals provided by the frame clock generator 1008, the radio buffers an entire 40 millisecond frame of TDMA bits in block 1020 and starts an initial search for synchronization. There are a limited number "n" possible synchronization positions in a stream of TDMA bits based on the periodic alignment between synchronization fields of the FDMA control channel and TDMA working channel. The number "n" is calculated in block 1022 from that synchronization alignment relationship. The first possible sync position is examined and (block 1024), and if sync is detected (block 1026), this synchronization position is used for the duration of the call to process received voice and data information in block 1034. The detected sync information is used to align the TDMA frame clock to the properly located synchronization position and to maintain TDMA slot synchronization in block 1010. If sync is not detected at this position, the position is incremented in block 1028, and a decision is made in block 1030 where the last sync position has been detected. If it has, the radio has failed to achieve synchronization, and the call is dropped in block 1032. Otherwise, control returns to block 1022 to search for the next synchronization position and continue the sync detection process. In this way, the present invention reduces the time and effort required to achieve synchronization with a TDMA working channel time slot by utilizing the periodic, predictable alignment between FDMA control channel frames and TDMA working channel frames in order

to quickly and efficiently achieve TDMA time slot (channel) synchronization.

Another aspect of the present invention permits this advantageous synchronization acquisition technique to be even further improved by embedding a bit field in the FDMA control channel to indicate the exact alignment location between the FDMA control channel and the TDMA working channel. In the example above where the fourth TDMA working channel frame aligns with the third FDMA control channel frame, a two bit sync positioning field may be included in the outbound frame of the control channel which is modulo-4 counted (i.e. 00, 01, 10, and 11) and monitored continuously by the radio to indicate the number of control channel frames until the fourth aligned frame will occur after receipt of the TDMA working channel assignment. Obviously, the count would be different for a different number control channel/working channel alignment relationship. This precise synchronization procedure makes sync acquisition more efficient and more reliable by reducing the chance of the radio obtaining false synchronization at the wrong location. Of course, other numbers of bits could be included in such a field where the periodic alignment of the control and working channels occur at different numbers of frames.

Speech Coding

In a dual mode radio system, various methods may be used to transmit speech information. In an FDMA mode, unencrypted speech information is transmitted and received as a continuous analog signal. In a digital mode, the analog speech signal is converted into a digital bit stream using for example pulse code modulation (PCM) techniques well known in the telecommunications art. Speech is low

pass filtered below four KHz (to reduce the signal bandwidth) and sampled at an eight KHz rate (i.e., at twice the sampled signal's highest frequency component to satisfy the Nyquist sampling theorem). Twelve bits of information are typically considered sufficient to cover the dynamic range of speech signals, and these twelve bits of dynamic range may be reduced to eight bits using logarithmic conversion techniques such as μlaw PCM used in conventional landline telephone networks. If this logarithmic conversion is performed at an eight KHz sampling rate, a 64 kbps bit stream is generated.

Further improvements in the transmission of voice and speech information may be achieved using voice coders (vocoders). Vocoders reduce the bit stream rate by purposefully not sending all the speech information sampled in the time domain waveform but instead sending only information modelling the vocal track that generates speech. A linear predictive coder (LPC) analyzes a speech waveform to produce a time varying model of the vocal track's excitation and transfer function. Digital filter coefficients represent "the filtering" of the sound going through the human vocal track. The digital filter is driven by an excitation that represents the vibrations of the vocal cords. These filter coefficients and excitation are derived for a time slot of speech on the order of 20 to 40 milliseconds and sent as a slot of bits. A voice decoder is of course required at the receiver to decode the coded speech using the reverse transfer function. Voice coding and decoding are typically both performed using a single vocoder. Any of a number of different vocoders implementing the LPC transfer function filter but which have a different form of excitation may be used including improved multiband excitation (IMBE), code book

excited LPC (CELP), vector excited LPC (VSELP), enhanced CELP, transformed binary regular pulse excitation (TRPE) and others.

Dual Mode Radio

A description is now provided of a dual mode radio that may be used in accordance with the present invention. Figure 6 is a high level function block diagram of a dual mode radio. Analog speech information from microphone 38 as well as digital data from data terminal 33 are received by a dual mode transmitter 34. The dual mode transmitter 34 processes and converts the speech/data information for transmission into the appropriate TDMA or FDMA format selected by the microprocessor 42 depending upon whether a TDMA or FDMA channel is accessed. RF circuitry 32 modulates and amplifies the speech/data information and transmits the modulated information via antenna 30. The antenna 30 also receives RF signals with RF circuitry 32 demodulating the received signals to an intermediate frequency (IF) for audio processing in dual mode receiver 36. Under the control of microprocessor 42, dual mode receiver 36 converts the information into a baseband analog audio signal for driving speaker 40 or a digital data stream to be sent to data terminal 33. A channel number database 41 is maintained by the radio which indicates those working channel numbers which are FDMA channels and those which are TDMA. Thus, when a radio receives a channel number assignment on the control channel, the radio knows immediately from database 41 whether to operate in an FDMA or a TDMA mode.

A more detailed description of various circuitry shown in Figure 6 is now provided in conjunction with Figures 7-10. Figure 7 illustrates an example of the RF circuitry 32 which may be used in

accordance with the present embodiment for both FDMA and TDMA calls. Antenna 30 is attached to a duplexer or antenna switch to permit use of the same antenna for transmission and reception. Although various analog and digital modulation techniques may be used in accordance with the present invention, $\pi/4$-differential quadrature phase shift keying ($\pi/4$-DQPSK) and quaternary continuous phase-frequency shift keying modulation (quaternary CPM-FSK) techniques are preferable for use in TDMA mobile radio communications. As described above, in the conventional FDMA mode, the analog speech frequency modulates the carrier. Since $\pi/4$-DQPSK requires a linear or quasilinear power amplifier and quaternary CPM-FSK does not, higher efficiency power amplifiers may be employed with the latter modulation type. In a preferred embodiment, CPM is used for radio to base station communications, and $\pi/4$-DQPSK modulation is used for base station to radio communications.

I/Q modulator 50 receives an RF carrier mixer input from synthesizer 46 for mixing with real (I) and imaginary (Q) information signals received from the dual mode transmitter 34. Differential coupler 54 detects the RF power amplifier 52 output level which is fed back to the I/Q modulator 50 to adjust and linearize the transmit power level of the RF power amplifier 52. One example feedback linearization technique that may be used in the preferred embodiment is cartesian feedback linearization. The modulated and amplified output from the power amplifier is transmitted via duplexer (or antenna switch) 44 and antenna 30.

Received signals are routed via antenna 30 and duplexer 44 to an intermediate frequency (IF) receiver section 48 that receives the

appropriate carrier frequency inputs from synthesizer 46. IF receiver 48 inputs, mixes, amplifies, and filters the received RF signal to remove the carrier and provide an intermediate frequency signal along with an indication of received signal strength (RSSI).

Figure 8 provides a function block diagram of a dual mode transmitter 34. The functions of dual mode transmitter 34 may be preferably performed using one or more digital signal processors (DSPs) either alone or in conjunction with application specific integrated circuitry (ASIC). Accordingly, many of the functions indicated by blocks in dual mode transmitter 34 may be performed by a suitably programmed DSP rather than by a separate hardware element (either analog or digital). Of course, alternative embodiments which employ discrete logic circuits, analog components, and/or programmed microprocessor/microcomputers may also be used to implement the claimed invention.

Analog speech is received at an analog to digital converter 56 which converts the analog speech into a PCM digital stream received at a serial input port and stored in PCM interface 58. Frames of PCM data are stored in PCM buffer 60. The buffer output is vocoded, i.e. encoded, by vocoder 62 using one of the linear predictive coding techniques described above, preferably improved multiband excitation. A channel encoder 76 adds forward error correction (FEC) bits to the vocoder bit stream output 64 and then interleaves that bit stream in particular time slots over multiple frames (for fading protection) along with corresponding control information such as the SACCH control information 70 (described above in Figure 4) which is generated by microprocessor 42 and provided via host interface 66 and host communication buffer 68. Burst generator 78 collects the

channel encoded output into a "burst" format, i.e. a time slot. Although a burst and a time slot refer to the same thing, since in the TDMA mode two or more radios share the same frequency on the uplink channel to the base station on separate time slots, it is common to refer to radios as bursting their transmission since it is discontinuous in contrast with continuous FDMA radio transmissions. On the downlink from the base station to the radios, the base station continuously generates information on all time slots so that its transmissions are continuous. Therefore, the term burst is not applicable to downlink channels. Waveform generator 80 takes the final bit stream including the vocoded speech bits, the forward error correction bits, the control bits such as the SACCH bits, etc. and filters that bit stream for various regulatory specifications, e.g., the FCC 12.5 KHz channel spacing bandwidth, etc., and then divides the bit stream into real (I) and imaginary (Q) bit streams. The burst buffer 82 stores the I and Q outputs from waveform generator 80 and passes parallel bursts of I/Q data to the RF interface 84 for serial output to the RF circuitry 32 for RF modulation. All the transmitter 34 DSP functions are coordinated under the control of a real time executive program 74.

Figure 9 illustrates in a format similar to that of Figure 8 the functions performed by receiver 36 using one or more DSPs. RF signals from RF circuitry 32 are received via serial input port at RF interface 86. The interface bits are stored in a buffer 88 and then demodulated in accordance with an appropriate demodulation technique (e.g., $\pi/4$-DQPSK) in demodulator 90. The demodulated bit stream 92 is then deinterleaved and decoded at 94 (i.e. the reverse operations of the transmitter channel encoder 76) by buffering frames of data and putting bits back in their original positions into separate

time slots. In a two slot/frame system, two frames are buffered to deinterleave. While interleaving and deinterleaving have been described and protect against fading, they are not required. Control bits from the bit stream are stored in the SACCH buffer 96, and speech bits are stored in speech buffer 98. The SACCH data 100 from the SACCH buffer 96 are provided to the microprocessor 42 via host communication buffer 104 and host interface 106. Vocoded speech 108 is decoded in vocoder-decode 110 with the output of the vocoder-decode 110 being held in speech buffer 112. The digitized speech in buffer 112 is transferred via PCM interface 114 and serial output port to a digital to analog converter 115 which transforms the digitized speech back into an analog audio signal.

Figure 10 shows further details of particular interfacing circuitry which "glues" together the RF circuitry 32, dual mode transmitter 34, dual mode receiver 36, microprocessor 42, and analog components such as microphone 38 and speaker 40. Microprocessor 42 includes suitable memory such as RAM 142, EEPROM 146, and EPROM 146. The microprocessor 42 interfaces with the various dual mode transmitter and receiver DSPs at interface 134 and to the radio display 146, keypad 150, and serial data port 152 at LCD interface 136, keypad interface 138, and serial data port interface 140, respectively. The microprocessor 42 is connected to the memories and interfaces by corresponding data, address, and control bus lines. Crystal 132 is connected to oscillator/clock circuitry 130 for providing necessary time/frequency reference signals. Because so many of the components receive inputs from the oscillator/clock circuitry 130, connecting signal lines have been omitted for clarity. Microphone 38 and speaker 40 interface to the rest of the system by way of an analog interface circuit 128. Other features of the "glue" circuitry

116 include waveform generator 118 which receives signals from transmitter 34 and generates the quadrature signals that modulate the carrier in RF circuitry 32. The frame clock generator 120 generates the FDMA control channel frame sync pulses and the TDMA working channel frame sync pulses by dividing down form the master clock whose frequency may be for example 19.2 MHz. The analog intermediate frequency (IF) input from RF circuitry 32 is converted by phase/frequency digitizer 122 into digital phase/frequency samples. The phase digitizer performs analog to digital conversions for phase modulation by counting zero crossings of the analog I/F signal. A digital phase lock loop processes the output of the phase digitizer to generate a frequency output. Phase digitization is used in TDMA modulation, and the frequency conversion is used for FDMA-FSK modulation. Such a phase/frequency digitizer is described in more detail for example in U.S. Patent No. 5,220,275, the disclosure of which is incorporated by reference. The serial port multiplexer 126 receives phase/frequency samples from the antenna (via RF circuitry 32) along with audio from the microphone 38 via analog interface 128.

Dual Mode Sites

A dual mode site is now described in conjunction with Figures 11 and 13. Figure 11 shows a high level function block diagram of a dual mode site 200. A site corresponds to a corresponding geographical area where individual radios of one or more groups of radio units communicate with each other (both within and outside of their own group) via shared radio base station repeater channels located at a trunked repeater control site 200. A dispatch console 201 may be housed directly at the repeater station site 200 or may be remotely located. Although only a single central site is shown in

Figure 11, it will be appreciated by those skilled in trunked radio repeater systems that one or more satellite receiver sites may be displaced spatially from the central site 200 where radio reception may temporarily be better. Received signals from the satellite sites as well as the central site are combined in conventional voting circuitry (not shown) to select the best available signal for control or communication purposes.

At central site 200, a transmitting antenna 206 connected to appropriate RF antenna circuitry such as RF circuitry 32 individually serves the plurality of duplex full RF channel transceivers included in RF repeater base stations 160, 170, and 180. Each base station's transmitter and receiver circuitry is controlled by a dedicated, microprocessor-based trunking control circuit. The trunking control processors communicate with one another and with the site controller 202 via control data bus 203. The primary site controller 202, a commercially available general purpose processor, provides the primary intelligence and control capability for the site 200. Alternate backup or "failsoft" functions may be incorporated within the base station trunking processors so as to provide continued trunked, repeater service even in the event that site controller 202 malfunctions or is otherwise taken out of service. Further details regarding the conventional single site repeater system including the trunking card and failsoft operational mode are disclosed in U.S. Patent 5,175,866 which is incorporated herein by reference.

An optional telephone interconnect may also be provided to the public switched telephone network (PSTN) or other telephone exchanges, e.g. PBX. A system manager 205 is connected to the site controller 202 for overall system management and control including

generating and maintaining a master radio/group ID and channel assignment database. The database is downloaded from the system manager 205 via the site controller to the radio/group ID and channel assignment database 204 in each site.

In accordance with the present invention, the site 200 includes a single FDMA control channel base station 160, one or more FDMA working channel base stations 170, and one or more dual mode (TDMA) working channel base stations 180. In general, channel requests and assignments are made via the existing FDMA control channel under the control of the site controller 202 (during normal operation). The site controller 202 assigns via control channel messages an FDMA working channel base station 170 (a frequency) or a dual mode working channel base station 180 (a frequency and time slot) based on the capabilities of the radios/group(s) involved in the call as established in the radio/group ID and channel assignment database 204 and the availability of working channels.

Figure 12 shows further detail of a dual mode working channel base station 180. As described above in conjunction with the dual mode radio in Figure 6, in the preferred embodiment, digital signal processing (DSP) circuits are employed for radio transmit, radio receive, and system interface processing in dual mode base station 180. Signals are received and transmitted over common antenna 206 and filtered with the corresponding receive filter 208 or transmit filter 210 depending upon whether the dual mode base station 180 is transmitting or receiving. Receiver 214 includes two DSPs 218 and 220; transmitter 248 includes two DSPs 252 and 254. Each DSP handles the processing of one time slot of information in each frame.

Here, since two time slots are provided per frame, there are two corresponding DSPs.

Multisite interface 222 also includes two DSPs 226 and 228 along with corresponding analog to digital and digital to analog converters 234, 236, 238, and 240 for interfacing a single site with a multisite network of sites connected via a multisite network switch as described in more detail below. Thus, the receiver 214, transmitter 248, and multisite interface 220 all include two digital signal processors to process for example two individual TDMA time slots per frame. Additional DSPs could be added to process additional time slot channels.

All connections to and from the DSPs are made via their respective serial ports. For example, control and channel signalling from the base station microprocessor controller 242 is transmitted to each DSP via each DSP's serial port. The base station microprocessor controller 242 performs the repeater's control shelf and trunking card functions including, for example, on the control channel to regulate protocol control and perform channel assignment processing and site databasing, and on the working channel, provide in progress call control, system interfacing, and test and alarm functions.

The transmitter DSPs 252 and 254 input serial bit streams, add forward error correction (FEC) bits to the bit stream, and output modulated waveforms. The receiver DSPs 218 and 220 input phase or frequency information and output the demodulated bit streams. The receiver 214 demodulates the carrier, acquires bit and slot synchronization, and corrects the bit stream using the forward error

correction bits. Each of the receiver DSPs 218 and 220 select the data associated with the particular time slot it is responsible for demodulating. Waveform generator 260 (also a DSP) combines the individual time slots processed by transmitter DSPs 252 and 254 and sends a consolidated waveform to RF circuitry 218. RF circuitry 218 may for example be similar to the RF circuitry 32 described in conjunction with Figure 7. The detailed description of the functions performed by the receiver and transmitter DSPs provided in conjunction with Figures 8 and 9 also applies to the DSPs in dual mode receiver 214 and dual mode transmitter 248 in the dual mode base station 180.

The multisite interface 222 permits the dual mode base station 180 to handle analog voice communications. Specifically, the multisite interface 222 converts between analog voice and digital vocoder bit streams. If the multisite interface 222 is to simply transmit a digital vocoder bit stream using for example a modem, the multisite interface DSPs 226 and 228 perform the modulation-demodulation function of a modem.

When the dual mode base station 180 operates in an FDMA mode, only one of each of the multisite interface DSPs, receive DSPs, and transmit DSPs are selectively activated, and the modulation-demodulation is changed to analog FM. In the FDMA mode, these DSPs perform various kinds of analog FM processing such as preemphasis and deemphasis filtering, amplitude limiting, low speed data filtering, and other audio filtering.

The base station microprocessor controller 242 may operate the dual mode base station 180 in a trunked mode as either a working

channel or a control channel. To function as an FDMA control channel base station, base station controller 242 continuously transmits and receives RF messages consisting of channel requests and assignments, site identification messages, active channel updates, radio log-ins and status. All received inbound RF messages are translated and passed to the site controller 202. Received site controller messages are formatted for transmission on the outbound RF control channel. In the event that the site controller 202 is absent or is failed, the base station controller 242 assumes the site controller responsibility and provides a failsoft mode of trunking. Failsoft operation may be carried out in accordance with the procedures set forth in U.S. Patent 5,175,866 assigned to the present assignee of this invention the disclosure of which is incorporated herein by reference.

For an FDMA or a TDMA working channel, the base station microprocessor trunking controller 242 is assigned to a call via messages from the site controller 202 via site controller I/O 244. The base station microprocessor trunking controller 242 reports to the site controller 202 the call request and generates outbound RF signalling to support call confirmation, group priority updates, and call termination. In the TDMA mode, the format of the data is different. For example, the low speed data used in FDMA is replaced by SACCH data in the TDMA mode, and the timing for call setup and drop is slightly different. Otherwise, the base station microprocessor controller 242 performs essentially the same functions in both the FDMA and TDMA modes.

FDMA Site Upgrade

The present invention provides a mechanism by which existing FDMA only sites may be easily and transparently (to the user) upgraded to include dual mode sites that accommodate TDMA radio communications. Referring to Figure 13, an existing FDMA site is shown servicing FDMA radios. In this environment, an FDMA radio requests an FDMA base station working channel from working channels 2-5 via the FDMA control channel to the FDMA control channel base station 1. The control channel base station 1 then assigns one of the FDMA base stations 2-5 to function as a working channel for that radio communication. That existing FDMA site may be upgraded by replacing one or more of the FDMA base stations with a dual mode base station. In the example shown in Figure 13, FDMA base station 5 is replaced with a dual mode base station (BS). The dual mode base station may provide in the FDMA mode one FDMA working channel 5 or in the TDMA mode two digital TDMA working channels 6 and 7 corresponding to TDMA time slot 1 and TDMA time slot 2. Of course, any number of existing FDMA base stations may be replaced with dual mode base stations or, in the alternative, if additional frequency bandwidth is available, additional dual mode base stations may be added.

Figure 14 shows a channel numbering translation method in accordance with the present invention that demonstrates how in an existing FDMA channel numbering plan, TDMA channels can be added with minimal impact on that numbering plan. In essence, two or more new channel numbers representing time slots in the TDMA frame are assigned to certain existing FDMA working channels. In a two slot TDMA system, for example, one dual mode base station may operate as a single FDMA working channel (5) or two TDMA digital

working channels (6 and 7). Thus, existing FDMA channel numbers may be maintained while adding or overlaying new TDMA working channels. The existing control channel remains the same and services both FDMA and TDMA working channel base stations.

Figure 14 shows how an existing 10 channel FDMA system with ten base stations may be upgraded to a 20 channel dual mode system using those ten base stations. Each channel number 1-20 corresponds to only one mode -- FDMA or TDMA. Therefore, the simple act of assigning a channel number to a dual mode radio unit automatically defines the mode in which the radio unit is to operate. Five of the existing base stations 1-5 remain FDMA only, and the five other existing base stations 6-10 are upgraded to dual mode and selectively operate in either the FDMA or TDMA modes. Channel number assignments 1-10 are FDMA working channels, and channel number assignments 11-20 are TDMA working channels. For example, TDMA channel 16 corresponds to frequency 8, time slot number 2 repeated by dual mode base station 8. FDMA channels 6-10 are reserved for dual mode base stations operating in an FDMA mode so channel 8 corresponds to the dual mode base station 8 operating in an FDMA mode.

Using this channel numbering scheme, a radio automatically recognizes the mode of a particular call based simply on the channel number assigned during call setup. Accordingly, each site and each base station includes a radio/group ID and channel assignment database 204 and 246, respectively. Dual mode flags are set in the databases for each radio ID and group ID to indicate whether (1) a radio unit is an FDMA only or a TDMA mode radio unit and (2) whether the group is FDMA only or dual mode. In addition, the

channel number database 41 in each dual mode radio unit indicates which channels are FDMA and which channels are TDMA. In this way, a dual mode radio knows immediately from the assigned channel number the adopted mode of current communication and adapts its transceiving operations accordingly.

In normal trunking operation, the site controller 202 actively assigns channels using radio/group ID and channel database 204. In order for the base station microprocessor controller 242 to assume site controller responsibilities in a failsoft mode, the radio/group ID and channel assignment database 246 similar to the site controller database 204 is also maintained. The database information is used for call validation, channel selection, and priority assignment. The base station controller 242 therefore knows in the failsoft mode whether to assign a particular call to a dual mode TDMA channel or an FDMA channel and configure the assigned dual mode base station accordingly.

Single Site Call Processing

Group and individual radio unit identification numbers and mode flags are stored in the dual mode site data base 204 and FDMA and TDMA channels identified in database 41 of the dual mode radio units. The specific channel number assignment received from the site controller determines the mode of operation. A dual mode radio switches to the appropriate FDMA or TDMA mode after receiving a channel assignment from the site control channel. For existing FDMA radio units, channel access is the same as in the EDACS trunked radio single site system referred to above and described in U.S. Patent 4,905,302. As described further below, the decision regarding which mode of communications to adopt and therefore the

appropriate channel assignment, is made by the site controller 202 based on the type of radio unit involved in the communication, the type of communication requested, and the availability of channel resources.

A channel assignment procedure performed by the site controller 202 at a dual mode site is now described in conjunction with the flow charts in Figures 15A and 15B. The channel assignment routine 300 begins with the determination of whether a radio's push-to-talk (PTT) button is depressed (step 302). When a radio's PTT button is depressed, that radio transmits over the inbound FDMA control channel to the site controller 202 a request message for a working channel that includes its radio ID and its currently selected group ID or the ID of an individual radio unit being called. Specifically, control channel information is received at the site 200 by FDMA control channel base station 160 and relayed onto the site controller 202. The site controller 202 determines the identity of the requesting radio (step 304) and determines from the radio/group ID and channel assignment database 204 if the requesting radio is an FDMA only or dual mode radio unit (step 306). The site controller 202 also checks database 204 to see if the requested group or receiving radio(s) is an FDMA group or radio(s) (step 308). If any radio or group ID to be involved in the call is FDMA only (step 312), control passes to decision block 314 where a determination is made whether all FDMA repeaters are busy. Thus, if an FDMA talk group is selected or an individual call is made with at least one of the radios being FDMA only, then the call must be assigned to an FDMA working channel base station repeater 170. If one of the FDMA working channel base station repeaters is idle, the site controller 202 assigns that idle FDMA repeater to the call and

the call assignment proceeds in conventional manner. If all FDMA repeaters are busy, a determination is made in step 320 whether all dual mode base station repeaters are busy. If they are not, an available dual mode base station repeater is assigned to the call and placed in an FDMA mode (step 326). However, if all repeaters are busy, the call is queued in step 322 and assigned to the next available FDMA base station repeater.

Returning to decision block 312, if all the individual radio IDs and/or group IDs involved in the call are dual mode, a decision is made in block 318 whether all dual mode repeaters are busy. If not, an available TDMA repeater and time slot are assigned to the call in step 324. Otherwise, the call is queued, and the next available repeater (either FDMA only or dual mode) is assigned. If a dual mode repeater becomes available first, the call is handled in TDMA mode. However, in order to minimize access delay, if an FDMA base station repeater first becomes available, the call may be set up in an FDMA mode. Of course, if there are reasons to justify waiting for a TDMA base station repeater, the call request may be queued until such a TDMA base station repeater is available.

Accommodating FDMA and Dual Mode
Sites and Roaming Radios in a Multisite Network

The present invention provides interoperability between FDMA sites and dual mode sites so that radios in an FDMA site and radios in a dual mode site can communicate via a multisite network switch. In addition, the present invention allows a dual mode radio unit with TDMA capabilities to "roam" into an FDMA only site area and participate in RF trunked communication via a multisite switch with a TDMA group or with another dual mode unit in a radio-to-radio

TDMA call. Of course, multisite calls in an FDMA mode are carried out in normal fashion as described for example in U.S. Patent 5,200,954.

The following is an example of how a multisite communication is handled. A calling dual mode radio in an FDMA only originating site is placed in an FDMA mode with the FDMA site assigning an FDMA base station repeater to the call. Audio from that FDMA site is routed to a multisite network switch which converts, i.e. vocodes, the audio into TDMA format for communications with a dual mode site/dual mode radios. More specifically, the multisite network switch receives control messages from the originating FDMA site indicating that an FDMA base station repeater has been assigned to the call and determines whether the audio for the call should be vocoded for TDMA communications or routed "as is" to the receiving site based on the capabilities and resources of each site, base station, group, and radio assigned to the call. Since the multisite switch receives channel assignment information from each site in the multisite network, it knows what type of base station (FDMA or dual mode) is assigned to the call communication at each site. A similar procedure applies to FDMA dispatch consoles connected to the multisite switch with the console using a vocoder in order to participate in TDMA type communications.

The basic hardware involved in dual mode multisite network call processing is now described in conjunction with Figure 16. U.S. Patent 5,200,954 mentioned above provides a detailed description of a multisite RF communications network being incorporated herein by reference. Accordingly, the detailed operation of such a multisite switching network is not repeated here. A dual mode site 400 and an

FDMA site 402 are connected to a multiswitch network switch 444. The multisite network switch 444 includes a time division multiplex (TDM) audio/data bus 424 for routing audio bits over predetermined time slots between sites and a control message bus 426.

The FDMA repeaters 434 in FDMA site 402 communicate with multisite switch 444 in an FDMA format including analog voice or digitized voice using standard 4-wire telephone lines 436. For an analog voice call, the baseband audio (0 to 3 - 4 KHz) is sent over one of the telephone lines 436 directly to the multisite switch 444. For a digitized voice or data (encrypted or nonencrypted), the digital data is converted by modem 435 into tones with these tones being transmitted over the telephone line 436 in analog form just like analog voice. A microprocessor-based site interface called a "MIM" included in the multisite switch 444 digitizes the analog audio/data information whether analog audio or analog tones from the site using analog to digital conversion means and routes the digitized information onto an assigned time slot over the TDM bus 424 via PCM link 442. The multisite network switch 444 transmits digital information on TDM time slots and does not distinguish between different type calls, e.g. analog, digital, vocoded, etc. The switch then routes the data over the TDM bus 424 to appropriate destinations such as other site interfaces including MIMs, a console interface module CIM 475, and a digital voice interface module DVIM 488 described more below. For the return path of a call, information directed to the FDMA site 402 is routed over PCM link 442, converted back into analog voice or modem tones by digital to analog conversion in MIM 475, and transmitted over telephone link 436.

Typically, console 480 operates in an FDMA mode and connects to multisite network switch 444 via CIM 478. Analog to digital and digital to analog conversion is performed in CIM 478 to effect the format conversions to/from PCM digitized form for routing over PCM link 454 to TDM bus 424. In dual mode site 400, information from FDMA repeaters 404 is routed to and from switch 444 using telephone lines 414 and modem 405 (where necessary) in the same manner as described over for FDMA repeaters 434 in FDMA site 402. TDMA base station repeaters 406 transmit vocoded speech and digital data to modem 413 which converts that digital information into modem tones for transmission over telephone link 416 to the multisite switch 444. The site interface MIM 475 converts the modem tones into digitized information which is routed onto the appropriate time slot over the TDM audio/data bus 424 via PCM link 460. TDMA information is directed to the dual mode site 400 from the TDM bus 424 over PCM link 460 and converted back into analog tones in MIM 475 for transmission over telephone line 416. Modem 413 converts the tones back into digital form for communication to the TDMA repeaters 406. The speech is then delivered to a corresponding TDMA repeater 406 for transmission on a corresponding radio frequency TDMA time slot working channel.

One or more digital voice interface unit (DVIU) 460 similar to that described in U.S. Patent 5,365,590 are connected to DVIM 488. The function of DVIM 488 and DVIU 460 is to permit multisite calls where some participants operate in an FDMA mode and others operate in a TDMA mode. The DVIM 488 tracks call requests from FDMA sources like an FDMA site repeater or an FDMA console for communication with a TDMA group or radio. Each digital voice interface unit (DVIU) 460 is assigned by the DVIM 488 to handle a

call and includes a digital signal processor 462 which comprises a vocoder 464 and/or an encrypter/decrypter 466. Upon detecting a call request on control bus 426 requiring conversion of analog audio from an FDMA site or FDMA console into TDMA format for a TDMA destination, the DVIM 488 configures a DVIU 460 to handle the call. The digitized FDMA audio is routed from the TDM bus 424 via PCM link 478 to DVIM 488 for digital to analog conversion and then transmission over line 472 to DVIU 460. Analog speech information is provided directly to the digital signal processor 462. Modem tones representing digitized speech are demodulated in modem 468, and the demodulated information is passed to DSP 462. The DVIM 488 sends control signals to the DVIU DSP 462 based on call set up parameters. For example, the DVIM 488 indicates whether or not the information is to be encrypted or not. The analog information is vocoded in vocoder 464 and encrypted (if necessary since encryption is optional) in encrypter 466 and the vocoded information is transmitted back to the multisite switch 444 via modem 468, line 472, CVIM 488 for digitization of the modem tones, and PCM link 456. From there, the vocoded speech may be routed to a TDMA repeater for broadcast in a TDMA format.

Conversely, for an FDMA repeater and/or the console to receive TDMA communications, the DVIM 488 pulls the TDMA audio data off the TDM bus 424 and routes through the DVIU to decode (and decrypt) the vocoded (and possibly encrypted) speech into a FDMA format. For communications involving only the transmission of data (nonvoice type data transmissions), the DVIU is not necessary since data is not vocoded and usually is not encrypted.

Thus, in addition to converting digitally encoded and/or encrypted audio as described in U.S. Patent 5,365,590, the DVIM and DVIU in the present invention convert information between FDMA and TDMA formats as audio information is routed between sites via the multisite switch 444. This interoperability between FDMA and TDMA formats has a number of advantages. For example, a TDMA radio user may roam into FDMA only sites and still maintain communication with TDMA groups. In addition, FDMA only type units like existing consoles can participate in TDMA calls.

To increase communication reliability, a TDMA radio who roams into an FDMA site may optionally be prevented from communicating on an encrypted TDMA group. Exercising this option requires TDMA base station repeaters at both originating and destination sites for encrypted TDMA calls. A console may still participate in an encrypted TDMA call in this configuration using DVIU 460 to convert the audio data.

In another embodiment of the present invention similar to that shown in Figure 16, time division multiplex (TDM) interfaces and TDM communications links may be used to permit the direct transmission of digitized audio and digital data information between the multisite switch TDM bus 424 and the base station repeaters at each site. For example, dual mode site 400 uses a T1 (i.e., 24 TDM channels) multiplexer connected to the multisite TDM bus 424 by a T1 link. Digitized voice including digitized voice and digital data from the FDMA repeaters 404 and vocoded speech and digital data from the TDMA repeaters 406 is time division multiplexed onto the T1 link using a T1 multiplexer directly from corresponding base station repeaters. In the opposite direction, digitized information is

taken directly off of the multisite TDM bus 424 onto a T1 link and selectively routed via a T1 multiplexer to the appropriate base station repeater. The benefit of this particular embodiment is that many of the analog to digital and digital to analog conversions performed in the multisite interfaces (MIMs, CIMs, DVIMs) as well as modems are eliminated. In addition to eliminating this hardware, this embodiment is also advantageous because it reduces the number of data conversion operations which reduces the inevitable loss or distortion of information that occurs each time a signal format conversion takes place.

One manner in which multisite calls may be processed in accordance with the present invention will now be described in conjunction with the flow chart in Figure 17. The following flow chart is executed by a computer in each site's multisite switch interface, i.e. each site's MIM, where each MIM's database is updated by the system manager 484 which maintains a database 486 of the master channel numbering assignment plan for all radio and group IDs in the multisite system. Initially, each MIM in the multisite network switch 444 receives a channel assignment message from the originating site over the multisite control bus 426 (step 600). Those secondary sites which are to be involved in the call, i.e. sites servicing radios belonging to the called group or a destination radio, then pass channel assignment request messages to the site controllers at the secondary sites (step 602). The site controllers at these secondary sites receive the channel request (step 604) and determine in decision block 606 whether the call corresponds to a TDMA group or a TDMA individual radio call. If not, analog audio information or modem data is routed to and from the secondary site (step 608) as in a conventional multisite system. However, if the call involves a TDMA

group or a TDMA individual radio, a decision is made (step 610) whether the originating site base station repeater is operating in a TDMA mode. If so, a second decision is made (step 612) whether the secondary site base station repeater(s) assigned to this particular call is (are) operating in a TDMA mode. If so, the vocoder audio data is routed from the TDM bus 424 of the multisite switch 444 to the secondary site in block 616. Otherwise, the vocoder audio data is converted into analog FDMA form using the DVIM 488 and DVIU 460 assigned to handle this call, and the thus converted analog audio is then routed over the multiswitch audio data bus via appropriate MIM(s) to the secondary site(s) where the repeater(s) is (are) operating in an FDMA mode.

Returning to decision block 610, if the base station repeater at the originating site is not operating in a TDMA mode, a decision is made in block 614 whether base station repeater(s) assigned in the secondary site(s) is (are) operating in a TDMA mode. If not, the FDMA analog audio is routed to the secondary site(s) using conventional multisite procedures in block 626. However, if a secondary site repeater is operating in a TDMA mode, the analog audio information on the multisite TDM audio/databus 424 is converted in the DVIU 460 via the DVIM 488 into TDMA audio format (vocoded). The vocoded TDMA audio is then routed to the secondary site in block 624.

While the invention has been described in connection with what is presently considered to be the most practical and preferred embodiment, it is to be understood that the invention is not to be limited to the disclosed embodiment, but on the contrary, is intended

to cover various modifications and equivalent arrangements included within the spirit and scope of the appended claims.

WHAT IS CLAIMED IS:

1. In a radio communications system including a plurality of transceivers that communicate using a framed RF control channel and RF working channels corresponding to time slots on a radio frequency, a method comprising the steps of:

establishing a relationship between a time when control channel frames are generated and a time when working channel time slots are generated, and

a transceiver using the established relationship in the process of accessing a time slot working channel.

2. The system in claim 1 wherein each control channel frame includes frame synchronization bits and each time slot includes slot synchronization bits and wherein the established relationship includes periodic alignment of frame synchronization bits and slot synchronization bits.

3. The system in claim 2 wherein the transceiver searches for the slot synchronization bits using the frame synchronization bits as a reference.

4. The method in claim 1 wherein the establishing step includes providing a bit field in the control frame indicating a location in a subsequent control channel frame that will align with a time slot.

5. The method in claim 1 wherein at least two time slots are included in each frame of the working channel radio frequency with each time slot having synchronization bits and wherein the

established relationship is that the synchronization bits of certain time slots regularly and predictably align with synchronization in certain control channel frames.

6. The method in claim 5 wherein the plurality of transceivers include base station repeaters transmitting on outbound working channel time slots and portable radios transmitting on inbound working channel time slots and wherein the outbound working channel time slots are offset from corresponding inbound working channel time slots.

7. The method in claim 6 wherein the inbound time slots include a bit field at the beginning of each time slot to compensate for differences in times of receipt at a base station repeater of transmissions from radios assigned to adjacent time slots.

8. In a radio communications system including a plurality of radios that communicate using a framed radio frequency control channel and a radio frequency working channel including plural time slots, a method for a radio to obtain synchronization on the working channel comprising the steps of:

establishing a relationship when certain control channel frames begin at the same time as certain working channel time slots;

monitoring the control channel frequency to determine if a working channel has been assigned to the radio;

tuning to an assigned working channel frequency and demodulating data bits received on the assigned working channel frequency;

buffering a predetermined number of said data bits;

calculating one or more potential time slot synchronization positions in the buffered data bits based on the established relationship; and

detecting time slot synchronization using the calculated position.

9. The method in claim 5 wherein the establishing step includes providing a bit field in the control frame indicating a location in a subsequent control channel frame that will align with a time slot.

10. A method for coordinating communications among a plurality of transceivers where first transceivers operate only in a first mode and second transceivers selectively operate in one of the first and a second mode, comprising the steps of:

assigning a first mode indicator to the first transceivers and a second mode indicator to the second transceivers;

storing the first and second mode indicator assignments; and

selecting a mode of operation based on the mode indicator assignments of transceivers involved in a radio communication.

11. The method in claim 10, further comprising the steps of:

defaulting to the first mode when a first transceiver is involved in the radio communication.

12. The method in claim 10, wherein the first and second transceivers include portable radios and fixed base station repeaters, the method further comprising the step of:

requesting a communication between second transceivers;

selecting a base station repeater operating in a second mode; and

if a base station repeater operating in the second mode is unavailable, selecting a first available base station repeater irrespective of mode.

13. The method in claim 12, wherein if the first available base station repeater operates only in the first mode, operating the second transceivers in the radio communication in the first mode.

14. A trunked radio communications system comprising:

plural radios some of the radios being dual mode radios for selectively operating in first and second modes, the dual mode radios including a memory for storing channel assignments with some channel assignments specified for communications in the first mode and some channel assignments specified for communications in the second mode;

a controller for coordinating trunked radio communications between the radios including making channel assignments;

wherein when the controller assigns a channel to a trunked radio communication involving at least one dual mode radio, the dual mode radio operates in one of the first and second modes based on a mode specified for the assigned channel stored in the memory.

15. The system in claim 14, further comprising:

plural base station repeaters for transceiving radio communications between the plural radios, some of the base station repeaters operating as dual mode repeaters, wherein when the controller assigns dual mode repeaters to a trunked radio communication, the dual mode repeater operates in one of the first

and second modes based on the mode specified for the assigned channel.

16. The system in claim 14, wherein the first mode corresponds to a frequency division multiple access (FDMA) mode of communication and the second mode corresponds to a time division multiple access (TDMA) mode of communication.

17. A method for communicating within a trunked radio repeater system having an RF control channel and plural RF working channels at least one of the working channels being a single frequency working channel and at least one of the working channels being a slotted working channel for transmitting digital signals during one of plural time slots time division multiplexed onto a radio frequency, said method comprising the steps of:

requesting assignment of a working channel over the control channel, and

determining whether to assign a single frequency working channel or a slotted working channel based on request information transmitted over the control channel.

18. The method in claim 17, further comprising:

storing for each of a plurality of radios a radio identification and a corresponding mode indication of whether a radio can communicate on a slotted working channel, wherein the request information provides a radio identification of each radio to be involved in a trunked radio communication, and

assigning a working channel based on mode indications corresponding to the identifications of each radio to be involved in the trunked radio communication.

19. The method in claim 18, wherein if one of the radios to be involved in the trunked radio communication operates only using a single frequency working channel, the method further comprises the step of setting up a trunked communication over a single frequency working channel.

20. A communication method for a plurality of radios assigned to one or more groups in a trunked radio repeater system having an RF control channel and plural RF working channel, at least one of the working channels being single frequency working channels and at least one of the working channels being a slotted working channel for transmitting digital signals during one of plural time slots time division multiplexed onto a radio frequency, said method comprising the steps of:

assigning a group identification to each group specifying a mode of operation;

transmitting a request for a working channel for communicating with one of the groups of radios, the request including a group identification signal over the control channel, and

at the control site, determining whether to assign a single frequency working channel or a slotted working channel to the group communication in response to the request based on whether the group identification corresponds to a single frequency mode of operation or a slotted working channel mode of operation.

21. The method in claim 20, wherein if one of the radios involved in the group communication operates only using a single frequency working channel, setting up a trunked communication over a single frequency working channel.

22. In a trunked radio repeater communication system having a control channel and plural working channels, one of the working channels being frequency division multiple access (FDMA) working channels for transmitting on an RF frequency and another of the working channels being a time division multiple access (TDMA) working channel for transmitting during one of plural time slots time division multiplexed onto a single RF frequency, a dual mode radio unit, comprising:

a dual mode transceiver for participating in trunked radio communications over the FDMA working channel in an FDMA mode and for participating in trunked radio communications over the TDMA working channel in a TDMA mode;

a memory storing an identification of each potential working channel as an FDMA working channel or a TDMA working channel; and

a processor for receiving a working channel assignment over the control channel, determining the identification corresponding to the assigned working channel, and operating the dual mode transceiver in one of the FDMA and TDMA modes based on the determined identification.

23. The dual mode radio in claim 22, wherein the dual mode transceiver includes a dual mode transmitter, a dual mode receiver and radio frequency circuitry connected to and used by the dual mode transmitter and receiver in both FDMA and TDMA modes.

24. The dual mode radio in claim 22, wherein the dual mode transceiver includes a vocoder to encode and decode speech using a linear predictive coding algorithm in the TDMA mode.

25. The dual mode radio in claim 22, wherein the dual mode radio transceiver employs frequency modulation in the FDMA mode and Pi/4-differential quadrature phase shift keying or continuous phase shift modulation in the TDMA mode.

26. A trunked radio repeater communication system having a control channel station repeater and plural working channel base station repeaters, one of the working channel repeaters operating only as a frequency division multiple access (FDMA) repeater for transmitting on an RF frequency and another of the working channel repeaters being a dual mode repeater for selectively operating either in a first mode as a time division multiple access (TDMA) working channel for transmitting during one of plural time slots time division multiplexed onto a single RF frequency or in a second mode as a frequency division multiple access (FDMA) repeater for transmitting on an RF frequency.

27. The trunked radio repeater communication system in claim 26, wherein the dual mode base station repeater comprises:

a dual mode transceiver for participating in trunked radio communications over the FDMA working channel in the second mode and for participating in trunked radio communications over the TDMA working channel in the first mode; and

a processor for receiving a working channel assignment over the control channel, determining a mode corresponding to the assigned working channel, and operating the dual mode transceiver in one of the FDMA and TDMA modes based on the determined mode.

28. The trunked radio repeater communication system in claim 27, wherein the dual mode base station repeater further comprises:

a memory storing an identification of each potential working channel as an FDMA working channel or a TDMA working channel to be used by the dual mode base station repeater during failsoft operations.

29. The dual mode radio in claim 27, wherein the dual mode transceiver includes a dual mode transmitter, a dual mode receiver and radio frequency circuitry connected to and used by the dual mode transmitter and receiver in both FDMA and TDMA modes.

30. The dual mode radio in claim 27, wherein the dual mode transceiver includes a vocoder to encode and decode speech using a linear predictive coding algorithm in the TDMA mode.

31. The dual mode radio in claim 27, wherein the dual mode radio transceiver employs frequency modulation in the FDMA mode and Pi/4-differential quadrature phase shift keying or continuous phase shift modulation in the TDMA mode.

32. A trunked radio repeater communication system, including a plurality of radio units for communicating via a central site control station having a control channel and plural working channels, one of the working channels being a frequency division multiple access (FDMA) working channel for transmitting on an RF frequency and others of the working channels being time division multiple access (TDMA) working channels for transmitting during time slots provided on a single RF frequency, comprising:

a memory storing identification information for each radio unit and corresponding mode information indicating whether each radio unit is capable of communicating over a TDMA working channel; and

a site controller located in the central site control station for receiving a working channel request over the control channel and determining from the working channel request and the information stored in the memory whether to assign a TDMA or an FDMA working channel.

33. A trunked radio repeater communication system, including a plurality of radio units for communicating via a central site control station having a control channel and plural working channels, one of the working channels being a frequency division multiple access (FDMA) working channel for transmitting on an RF frequency and others of the working channels being time division multiple access (TDMA) working channels for transmitting during time slots provided on a single RF frequency, wherein the same control channel is used to assign and monitor both FDMA and TDMA working channels.

34. The trunked radio repeater communication system in claim 33, wherein an FDMA or a TDMA working channel is assigned according to communication capabilities of radio units involved in a communication.

35. The trunked radio repeater communication system in claim 33, further comprising plural repeaters one being capable of transceiving only FDMA communications and another being capable of transceiving both FDMA and TDMA communications.

36. The trunked radio repeater communication system in claim 35, wherein an FDMA or a TDMA working channel is assigned according to communication capabilities of the repeater and radio units involved in a communication.

37. The trunked radio repeater communication system in claim 33, wherein the control channel is an FDMA control channel.

38. A method for adapting an existing trunked radio communication system including a plurality of base station repeaters with one repeater being a control channel repeater through which mobile or portable radio units request access to a radio working channel and plural frequency division multiple access (FDMA) base station repeaters providing FDMA working channels where one trunked FDMA communication occupies at least one radio frequency to accommodate time division multiple access (TDMA) working channels where one trunked TDMA communication occupies a time slot on one radio frequency, comprising:

adding a TDMA base station repeater to the existing trunked radio communication system to provide a TDMA working channel;

determining whether a trunked radio communication is to be carried out on an FDMA or a TDMA working channel; and

assigning the radio communication to the FDMA base station repeater or the TDMA base station repeater based on the determining step.

39. A method for adapting an existing trunked radio communication system using single frequency working channels to include slotted working channels corresponding to one of a plurality

of time slots time division multiplexed onto a radio frequency, comprising:

assigning a first set of channel numbers to single frequency working channels in the existing trunked radio communications system, and

assigning a second set of channel numbers as dual mode working channels that can function as either a single frequency or a slotted working channel depending on a selected mode of communication.

40. The method in claim 39, further comprising the steps of:

establishing a database indicating whether each channel number is a single frequency working channel or a dual mode working channel; and

in response to a working channel request for a single frequency working channel, assigning a working channel number to the communication for which a corresponding indication in the database establishes the working channel as a single frequency working channel, and in response to a working channel request for a slotted working channel, assigning a working channel number to the communication for which a corresponding indication in the database establishes the working channel as a slotted working channel.

41. A method for assigning a working channel in a multisite trunked radio communications system including plural sites and plural radios, some of the radios operating only in a first mode and some of the radios operating in either the first or a second mode, each site including plural repeaters, one repeater operating only in the first mode and one repeaters operating in either the first or the second mode, comprising the steps of:

(a) determining what mode or modes a radio requesting a working channel can operate;

(b) determining what mode or modes radios to be involved in the communication with the requesting radio can operate;

(c) if any radios are determined in steps (a) or (b) to operate only in the first mode, assigning the communication to a repeater that can operate in the first mode.

42. The method in claim 41, further comprising the steps of:

(d) if all radios are determined in steps (a) or (b) can operate in the second mode, assigning an available repeater that operates in the second mode.

43. The method in claim 41, wherein if there are no available repeaters that can operate in the second mode, assigning an available first mode repeater and operating the communication in the first mode.

44. A multiple site trunked radio communication system comprising:

first radios operable in a first mode of communications only;

second radios selectively operable in the first mode and in a second mode of communications;

plural sites, each site corresponding to a geographical area and having a site controller connected to plural base station transceivers corresponding to RF communication channels for communicating with radios in or near the corresponding geographical area;

a multisite switch, connected to each of the plural sites, for routing information between sites to permit trunked communication between radios located in different sites;

wherein one of the sites supports only the first mode of communication and another of the sites supports at least the second mode of communication; and

means for permitting a radio in the first mode located in a geographical area corresponding to the one site to communicate via the multisite switch with a radio in the second mode located in a geographical area corresponding to the other site.

45. The multiple site trunked radio communication system according to claim 44, wherein the other site also supports radio communications in the first mode.

46. The multiple site trunked radio communication system according to claim 44, wherein the first mode is frequency division multiple access (FDMA) and the second mode is time division multiple access (TDMA).

47. The multiple site trunked radio communication system according to claim 44, further comprising a console connected to the multisite switch for participating in trunked communications involving radios operating in the first and second modes using the means for permitting.

48. The multiple site trunked radio communication system according to claim 44, wherein the multisite switch includes for each site a switch interface, each switch interface being connected together via one or more buses, such that when a multisite call is being established, each site interface to be involved in the multisite call determines whether the call is to be conducted in the first or the second mode.

49. The multiple site trunked radio communication system according to claim 44, wherein the means for permitting includes a mode conversion unit connected to the multisite switch for converting a call formatted in the first mode into the second mode and for converting a call formatted in the second mode into the first mode.

50. The multiple site trunked radio communication system according to claim 49, wherein the multisite switch includes data and control buses for routing multisite call information and control information, respectively, between sites and a mode conversion interface, connected to the multisite data and control buses, for monitoring the control bus to detect which multisite calls require conversion and for routing the call information in one of the first and second modes from the multisite data bus to the mode conversion unit which converts the call information into the other of the first and second modes and returns the converted call information to the multisite data bus for routing to a site involved in the multisite call.

51. In a digitally trunked radio frequency communications system including plural sites, each site having a corresponding coverage area and plural trunked base station radio transceivers, for serving portable trunked radio transceivers disposed within the coverage areas, with some of the radio transceivers supporting only frequency division multiple access (FDMA) communications and others of the radio transceivers supporting at least time division multiple access (TDMA) communications, a distributed switch for routing communications involving an FDMA radio transceiver corresponding to one site and a TDMA radio transceiver corresponding to another site comprising:

a conversion interface module for converting communications in an analog format into a digital encoded format and for converting communications in the digital encoded format into the analog format,

wherein the conversion interface module permits an FDMA radio transceiver to participate in digitally encoded communications with one or more TDMA radio transceivers.

52. The system in claim 51, wherein the analog format corresponds to analog audio and the digital encoded format corresponds to vocoded audio.

53. The system in claim 52, wherein at least one of the sites includes FDMA base station radio transceivers and TDMA base station radio transceivers.

54. The system in claim 51, wherein a TDMA radio transceiver having roamed into a site area where only FDMA base station radio transceivers are currently available for trunked communications may participate in a trunked, digitally encoded radio communication involving one or more other TDMA radio transceivers communicating from another site area using the conversion interface module.

55. A method for permitting a first radio operating in a frequency division multiple access (FDMA) mode located in a geographical site to participate in a digitally vocoded communication with one or more other radios operating in a time division multiple access (TDMA) mode located in a different geographical site over a distributed time division multiplex (TDM) digital switch, comprising:

(a) providing each site with a corresponding interface to the switch;

(b) providing a conversion interface module connected to the switch;

(c) routing digitally vocoded communications involving the first radio to the conversion interface module;

(d) converting vocoded communications into an analog format; and

(e) sending the converted communications from the digital interface module to the first radio via its corresponding interface.

56. In a multisite network of trunked radio communications sites connected by a distributed time division multiplex (TDM) digital switch for servicing radios some of which operate in a frequency division multiple access (FDMA) mode and some of which operate in a time division multiple access (TDMA) mode, a method comprising the steps of:

(a) generating a multisite call request at an originating site and passing corresponding channel requests to one or more destination sites;

(b) collecting channel assignments from all sites made in response to the multisite call request; and

(c) determining from the collected channel assignments whether the call involves a radio operating in a TDMA mode.

57. The method in claim 56, further comprising:

if the call does not involve a radio operating in a TDMA mode, routing audio data for the call directly to all sites involved in the call.

58. The method in claim 56, further comprising:

if a base station repeater at the originating site assigned to the call is operating in a TDMA mode, determining if each base station repeater involved in the call is operating in a TDMA mode;

if all base station repeaters involved in the call are operating in a TDMA mode, routing audio data for the call directly to all sites involved in the call.

59. The method in claim 58, further comprising:

if a base station repeater involved in the call is operating in a FDMA mode,

converting audio data for the call into an FDMA format, and

routing the converting audio data to the base station repeater operating in the FDMA mode.

Fig. 1(Prior Art)

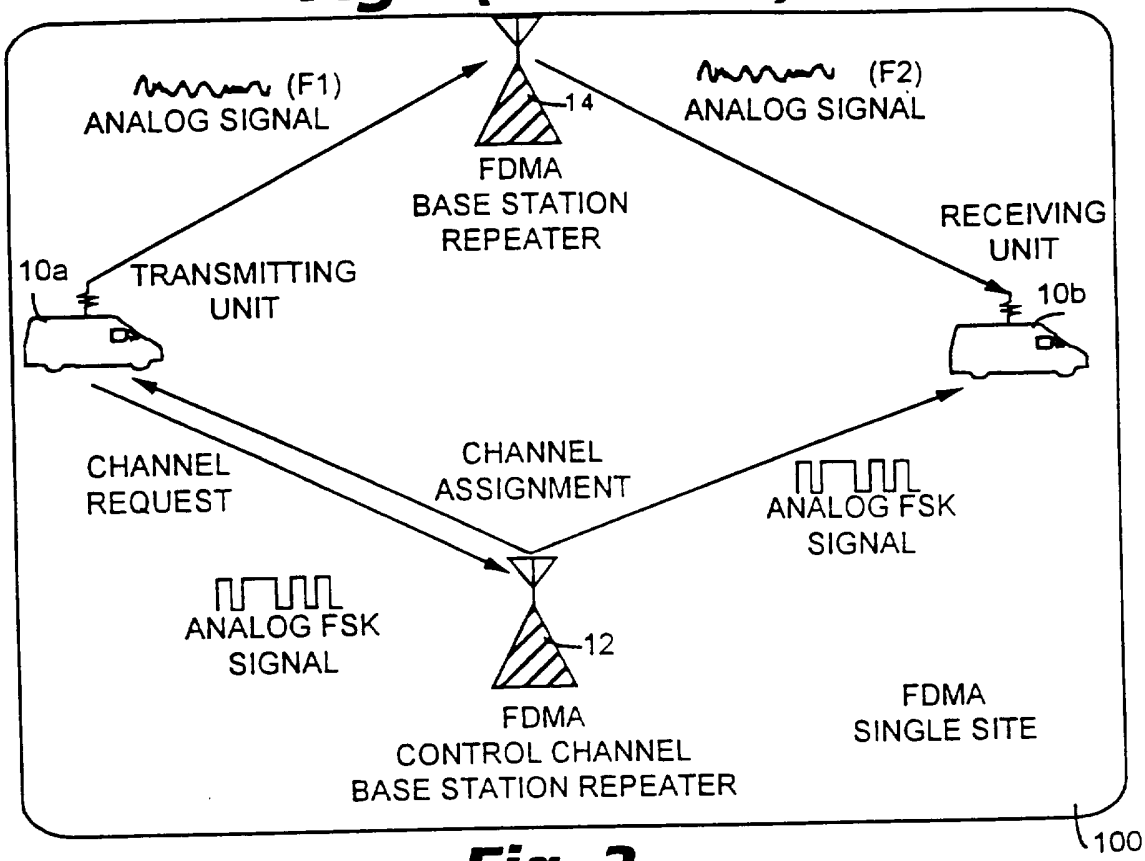

Fig. 2

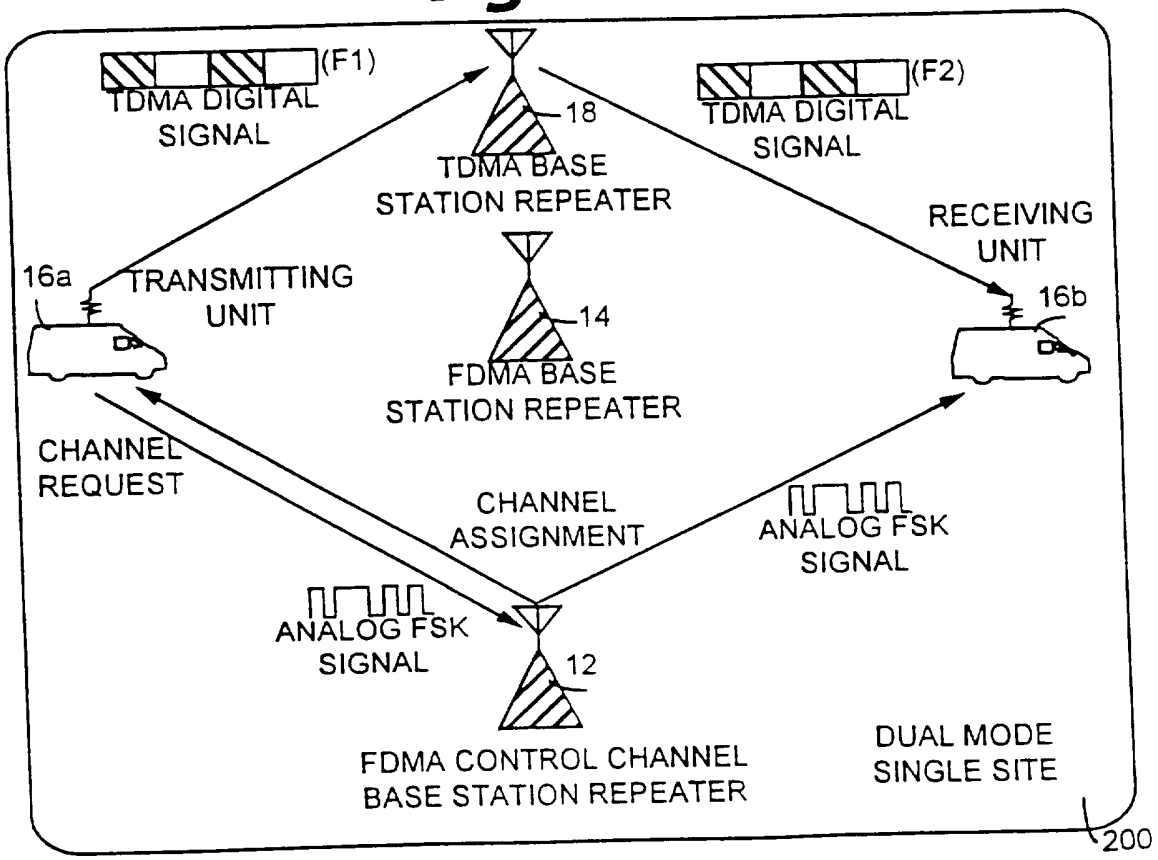

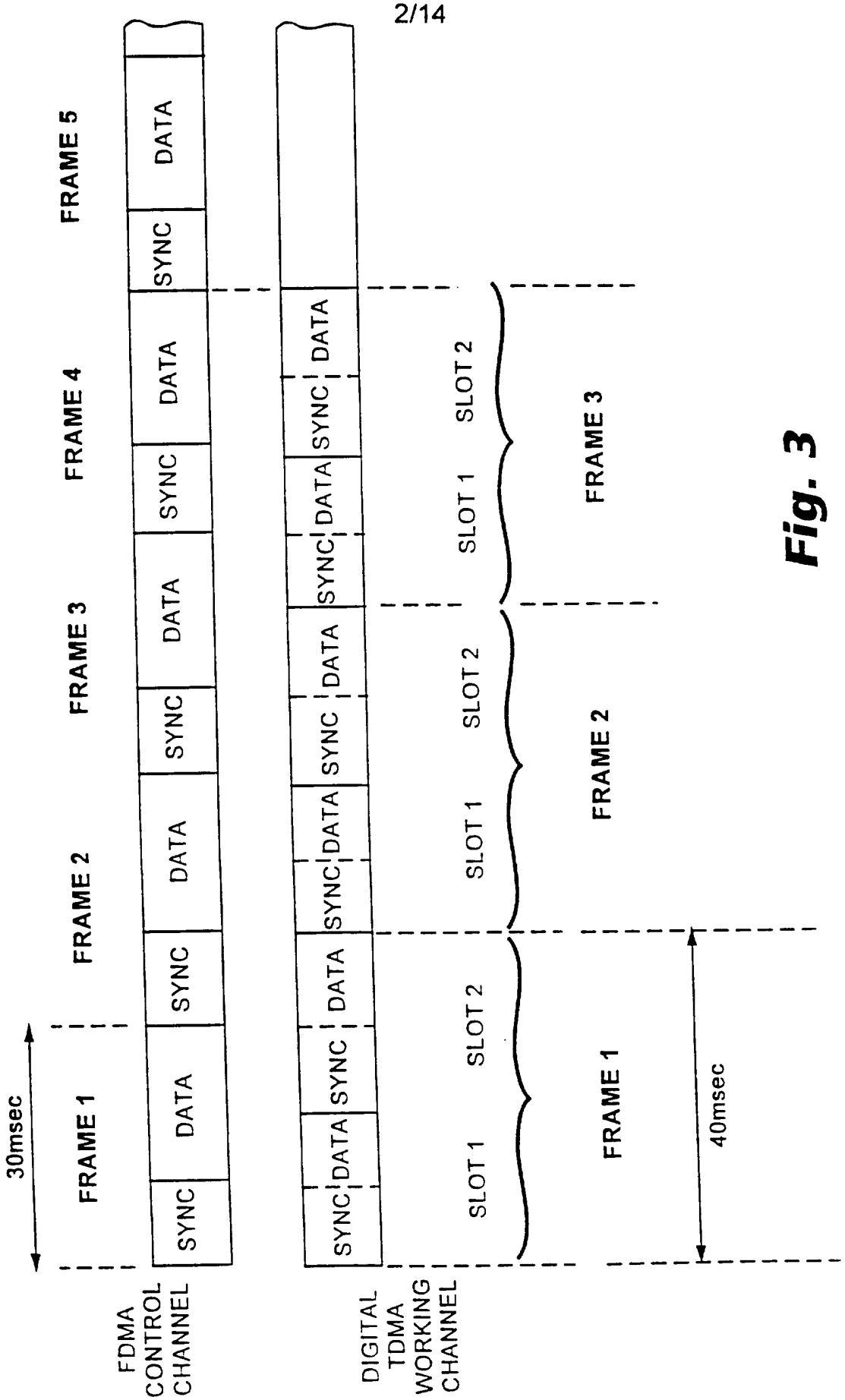
FRAME 1
FRAME 2
FRAME 3
FRAME 4
FRAME 5
30msec
SYNC
DATA
SLOT 1
SLOT 2
40msec
FDMA CONTROL CHANNEL
DIGITAL TDMA WORKING CHANNEL

Fig. 3

Fig. 4(a)

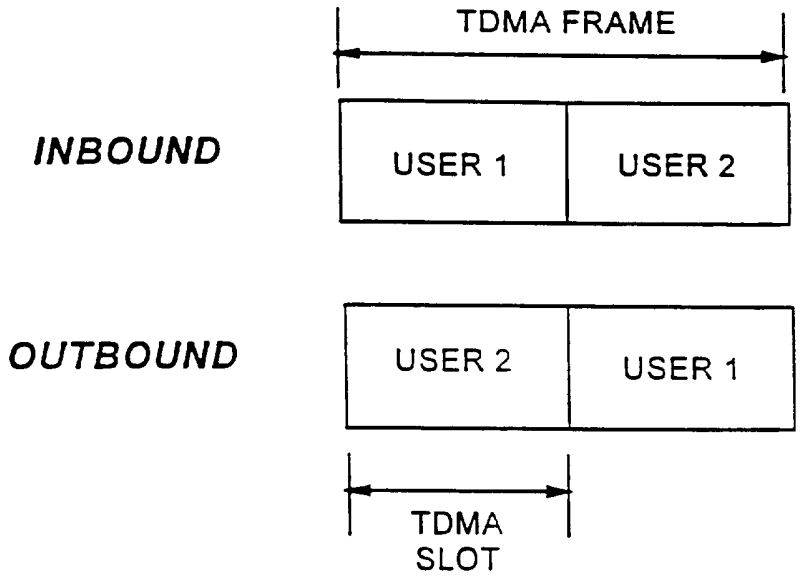

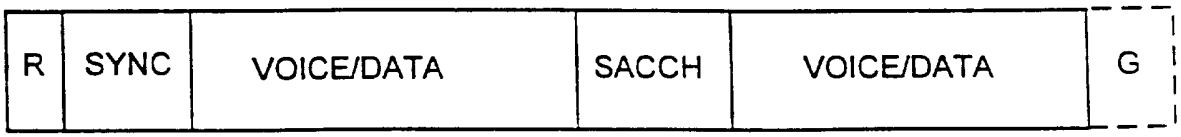

INBOUND TDMA SLOT FORMAT



OUTBOUND TDMA SLOT FORMAT

Fig. 4(b)

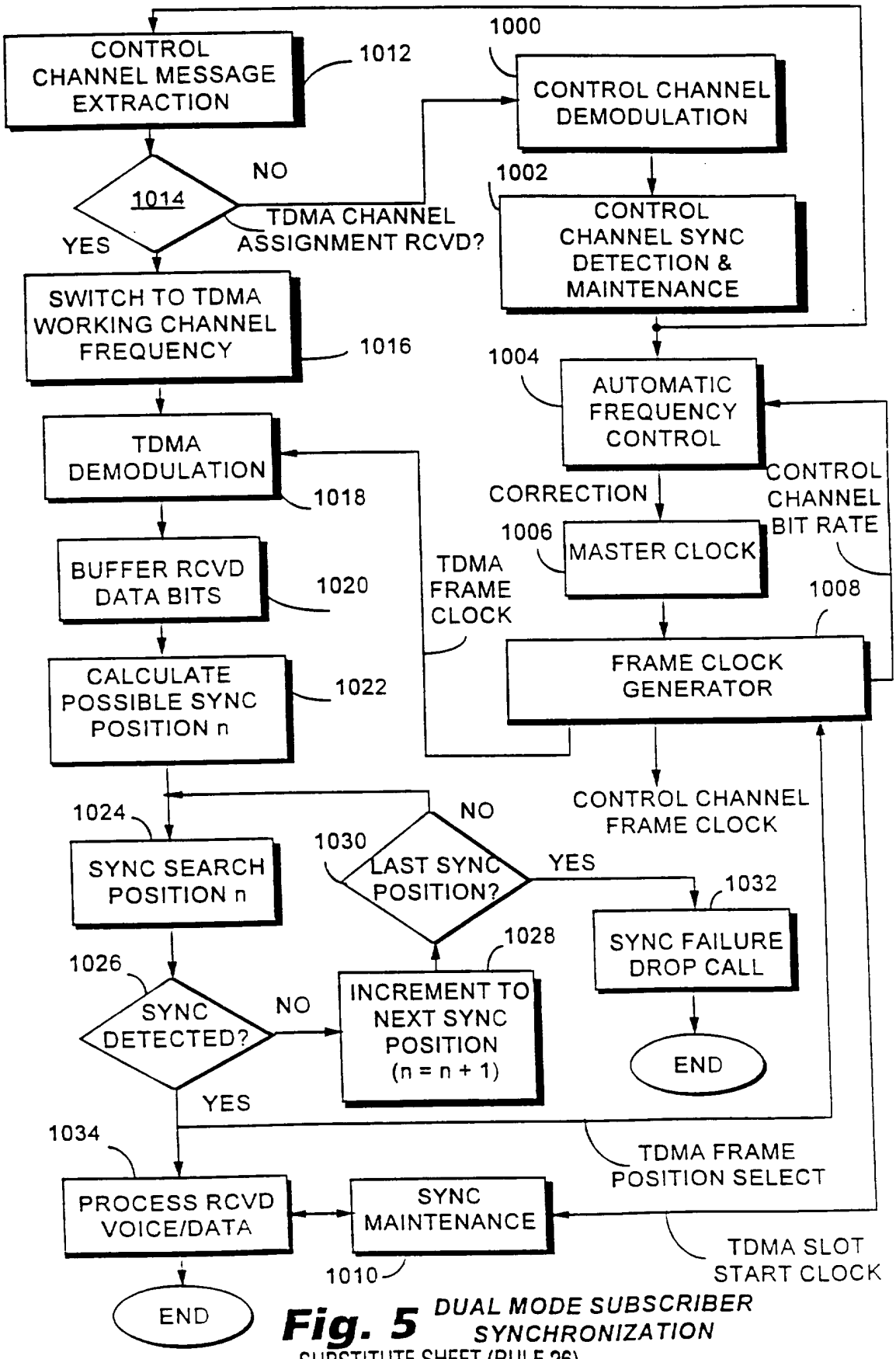

Fig. 5 *DUAL MODE SUBSCRIBER SYNCHRONIZATION*

Fig. 6

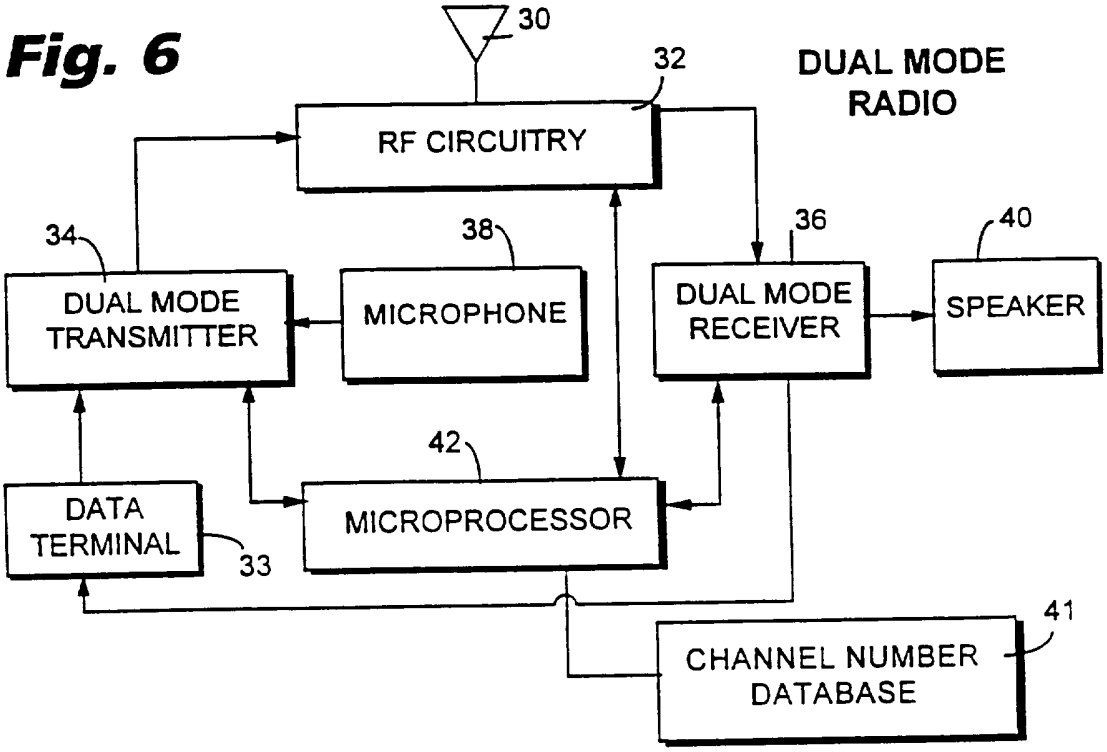
30
32
DUAL MODE RADIO
RF CIRCUITRY
34
38
36
40
DUAL MODE TRANSMITTER
MICROPHONE
DUAL MODE RECEIVER
SPEAKER
42
DATA TERMINAL
33
MICROPROCESSOR
41
CHANNEL NUMBER DATABASE

Fig. 7

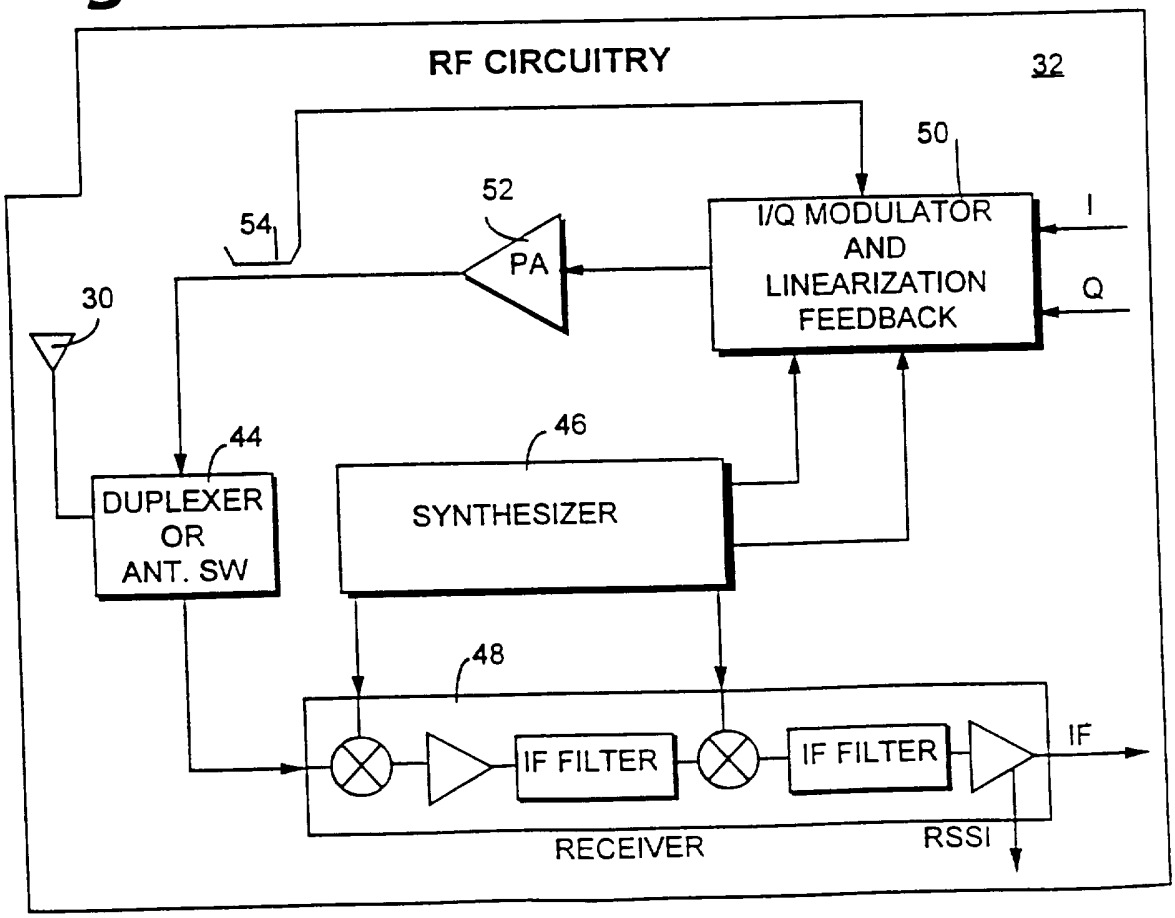
RF CIRCUITRY
32
50
52
54
I/Q MODULATOR AND LINEARIZATION FEEDBACK
I
Q
PA
30
44
46
DUPLEXER OR ANT. SW
SYNTHESIZER
48
IF FILTER
IF FILTER
IF
RECEIVER
RSSI

Fig. 8

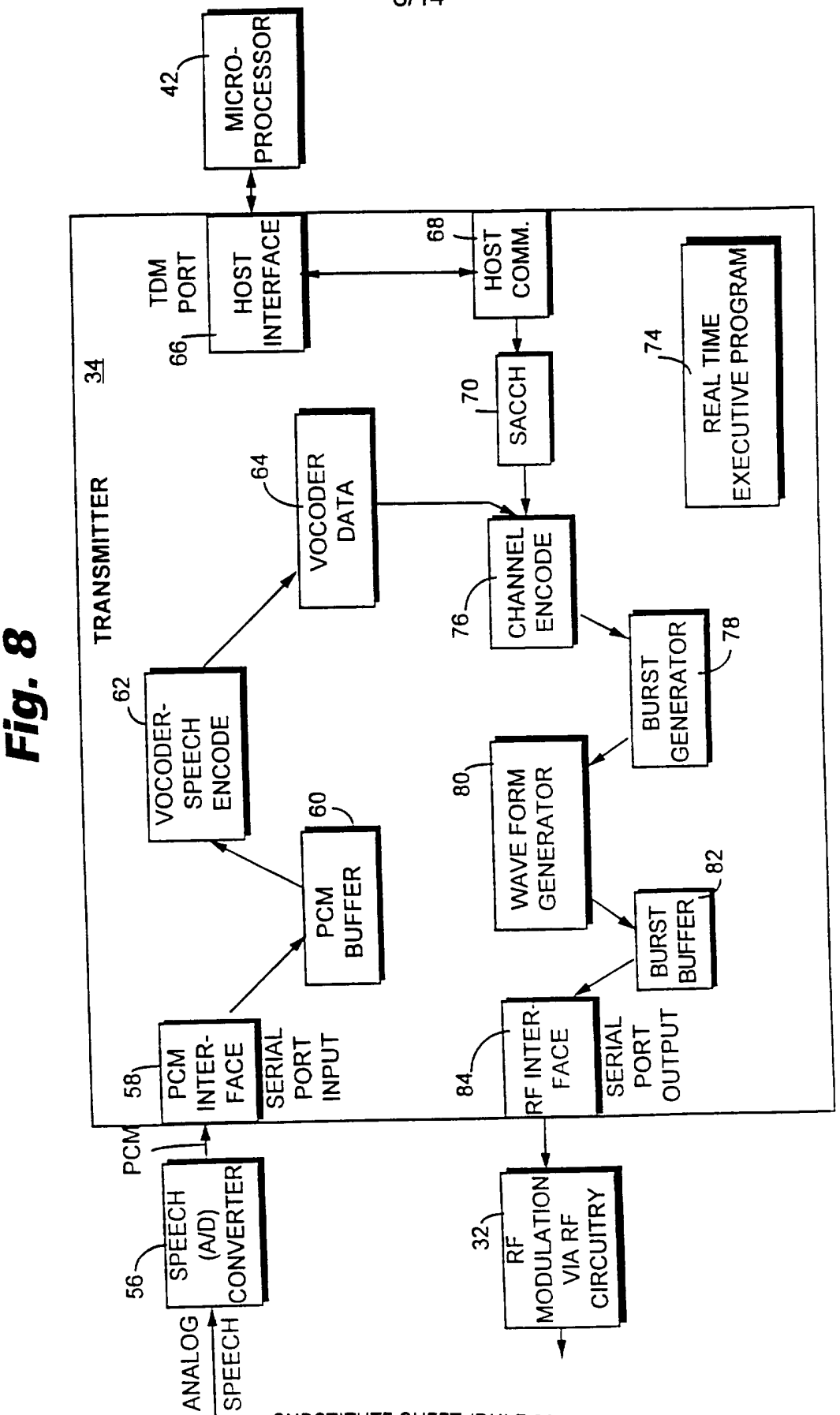
42
MICRO-PROCESSOR
TRANSMITTER
34
TDM PORT
66
HOST INTERFACE
68
HOST COMM.
74
REAL TIME EXECUTIVE PROGRAM
70
SACCH
64
VOCODER DATA
76
CHANNEL ENCODE
78
BURST GENERATOR
62
VOCODER-SPEECH ENCODE
60
PCM BUFFER
80
WAVE FORM GENERATOR
82
BURST BUFFER
58
PCM INTER-FACE
SERIAL PORT INPUT
84
RF INTER-FACE
SERIAL PORT OUTPUT
PCM
56
SPEECH (A/D) CONVERTER
ANALOG SPEECH
32
RF MODULATION VIA RF CIRCUITRY

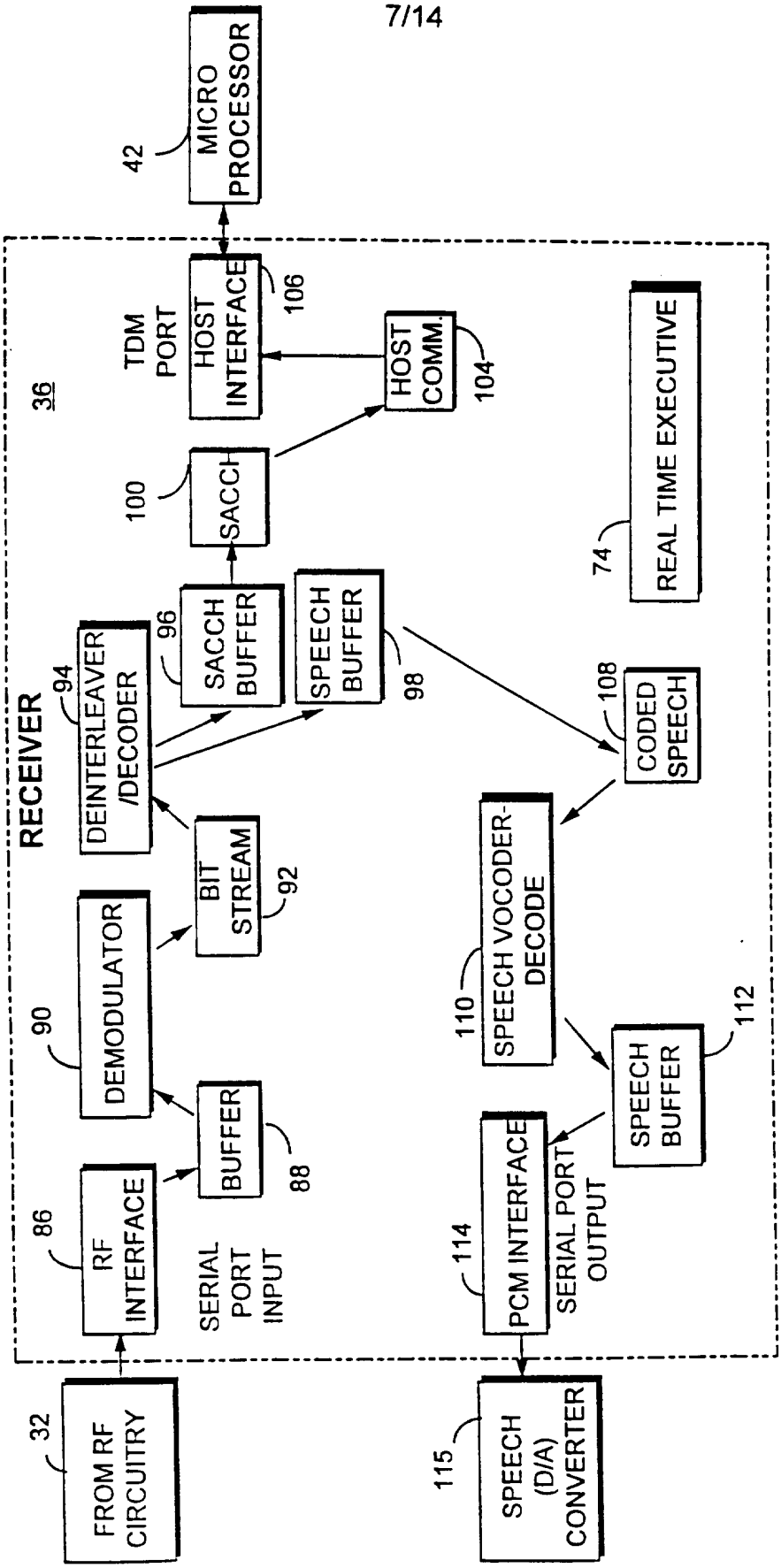
42
MICRO PROCESSOR
TDM PORT
HOST INTERFACE
106
HOST COMM.
104
36
100
SACCH
74
REAL TIME EXECUTIVE
RECEIVER
96
SACCH BUFFER
SPEECH BUFFER
98
94
DEINTERLEAVER /DECODER
108
CODED SPEECH
BIT STREAM
92
90
DEMODULATOR
110
SPEECH VOCODER-DECODE
112
SPEECH BUFFER
BUFFER
88
86
RF INTERFACE
SERIAL PORT INPUT
114
PCM INTERFACE
SERIAL PORT OUTPUT
32
FROM RF CIRCUITRY
115
SPEECH (D/A) CONVERTER

Fig. 9

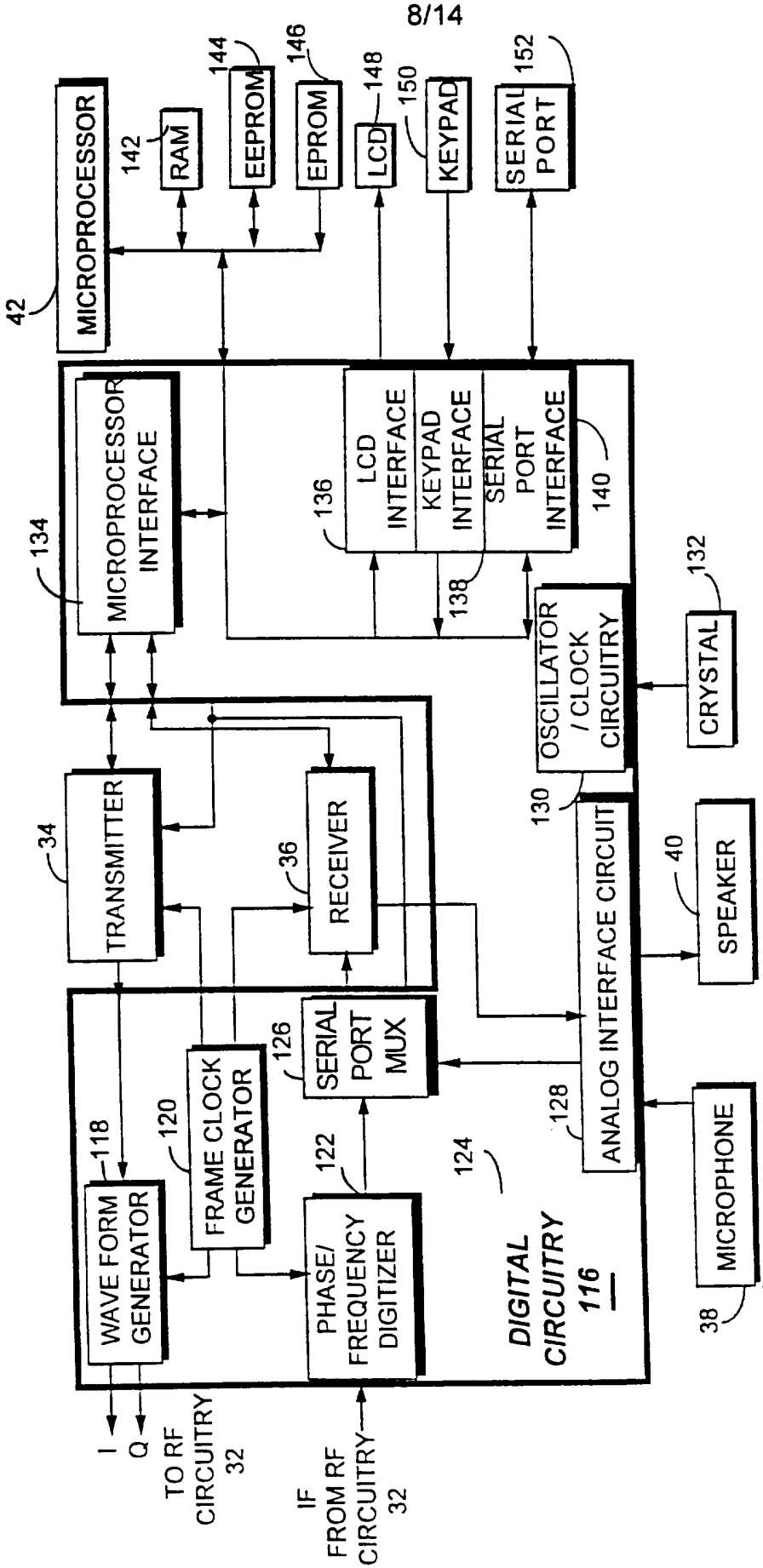
MICROPROCESSOR
42
RAM
142
EEPROM
144
EPROM
146
LCD
148
KEYPAD
150
SERIAL PORT
152
MICROPROCESSOR INTERFACE
134
LCD INTERFACE
KEYPAD INTERFACE
SERIAL PORT INTERFACE
136
138
140
OSCILLATOR / CLOCK CIRCUITRY
130
CRYSTAL
132
TRANSMITTER
34
RECEIVER
36
SERIAL PORT MUX
126
ANALOG INTERFACE CIRCUIT
128
SPEAKER
40
MICROPHONE
38
WAVE FORM GENERATOR
118
FRAME CLOCK GENERATOR
120
PHASE/ FREQUENCY DIGITIZER
122
124
DIGITAL CIRCUITRY 116
I
Q
TO RF CIRCUITRY 32
IF FROM RF CIRCUITRY 32

Fig. 10

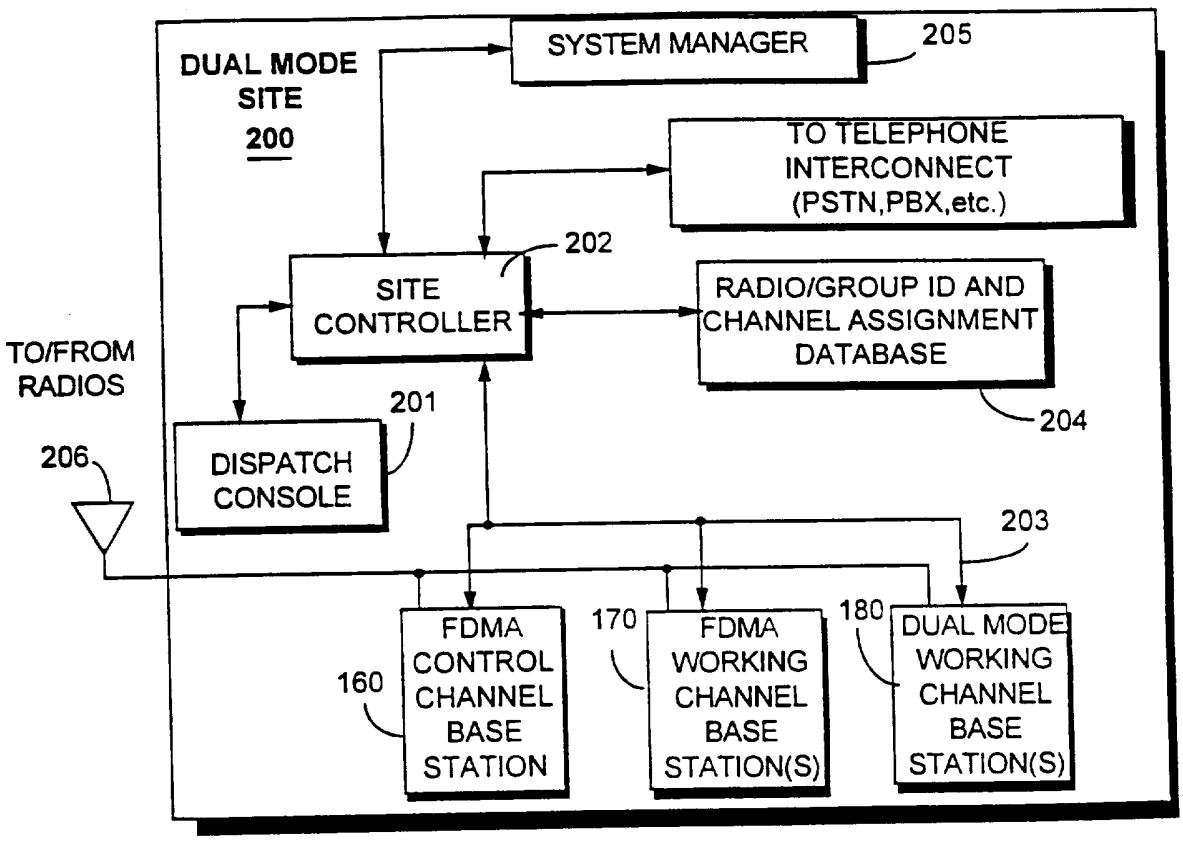
DUAL MODE SITE 200
SYSTEM MANAGER
205
TO TELEPHONE INTERCONNECT (PSTN,PBX,etc.)
202
SITE CONTROLLER
RADIO/GROUP ID AND CHANNEL ASSIGNMENT DATABASE
204
TO/FROM RADIOS
206
201
DISPATCH CONSOLE
203
160
FDMA CONTROL CHANNEL BASE STATION
170
FDMA WORKING CHANNEL BASE STATION(S)
180
DUAL MODE WORKING CHANNEL BASE STATION(S)

Fig. 11

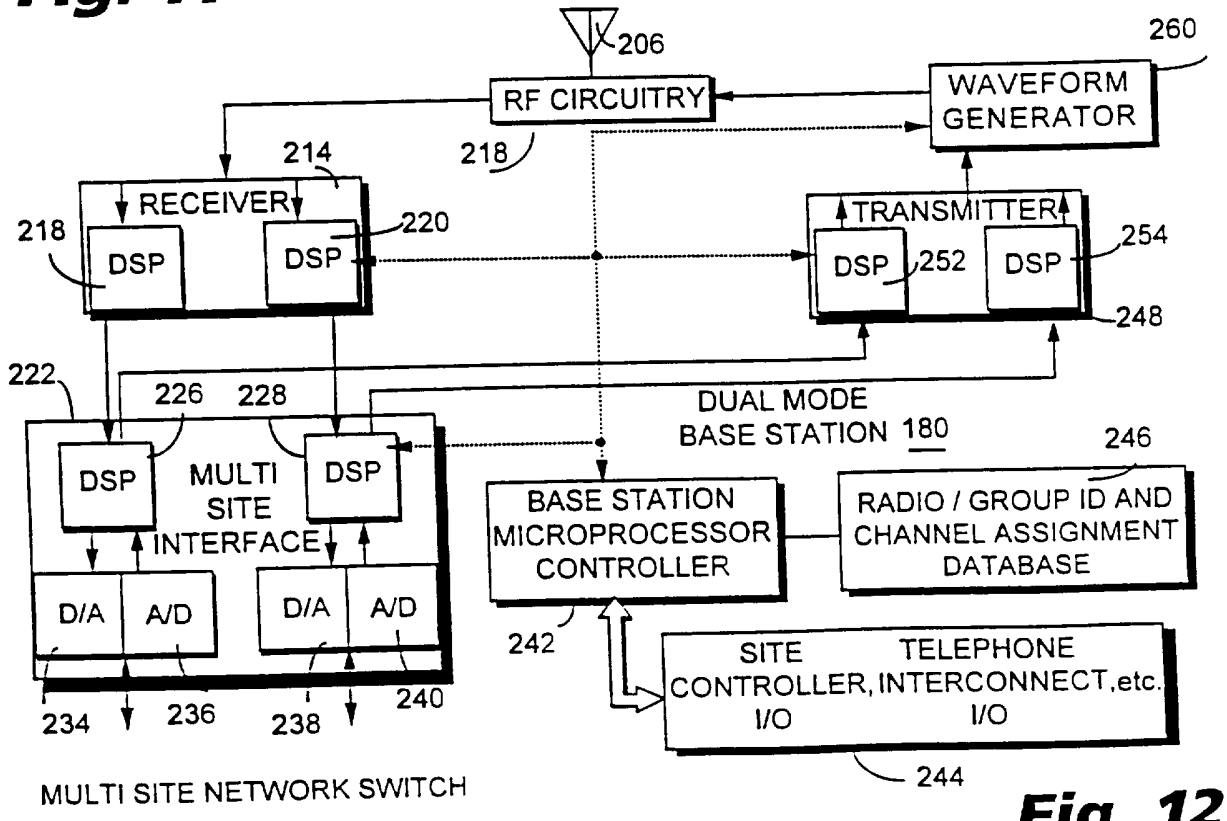
206
260
RF CIRCUITRY
WAVEFORM GENERATOR
214
218
RECEIVER
TRANSMITTER
218
DSP
DSP
220
DSP
252
DSP
254
248
222
226
228
DUAL MODE BASE STATION 180
DSP
MULTI SITE INTERFACE
DSP
246
BASE STATION MICROPROCESSOR CONTROLLER
RADIO / GROUP ID AND CHANNEL ASSIGNMENT DATABASE
D/A
A/D
D/A
A/D
242
SITE CONTROLLER I/O
TELEPHONE INTERCONNECT,etc. I/O
234
236
238
240
244
MULTI SITE NETWORK SWITCH

Fig. 12

Fig. 13

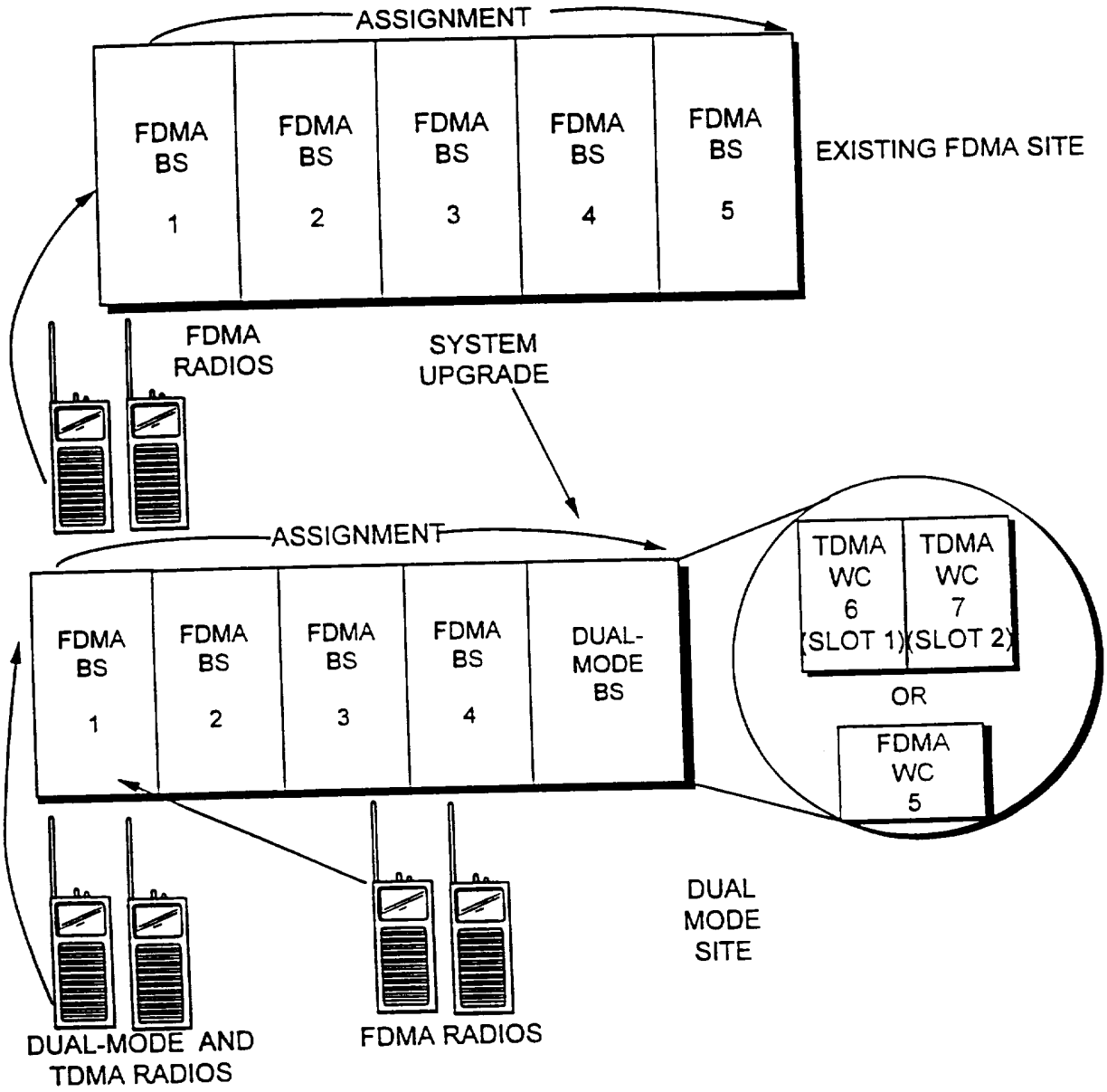
ASSIGNMENT
FDMA BS 1
FDMA BS 2
FDMA BS 3
FDMA BS 4
FDMA BS 5
EXISTING FDMA SITE
FDMA RADIOS
SYSTEM UPGRADE
ASSIGNMENT
FDMA BS 1
FDMA BS 2
FDMA BS 3
FDMA BS 4
DUAL-MODE BS
TDMA WC 6 (SLOT 1)
TDMA WC 7 (SLOT 2)
OR
FDMA WC 5
DUAL MODE SITE
DUAL-MODE AND TDMA RADIOS
FDMA RADIOS

Fig. 14

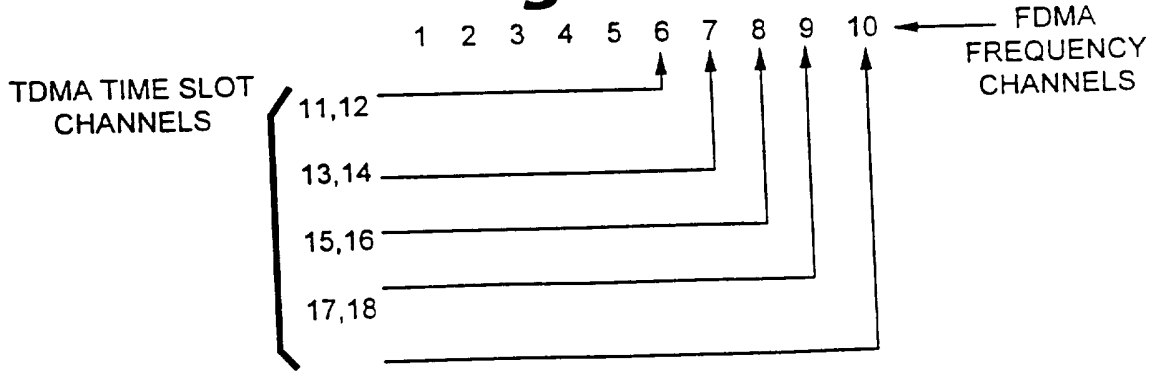
1 2 3 4 5 6 7 8 9 10
FDMA FREQUENCY CHANNELS
TDMA TIME SLOT CHANNELS
11,12
13,14
15,16
17,18

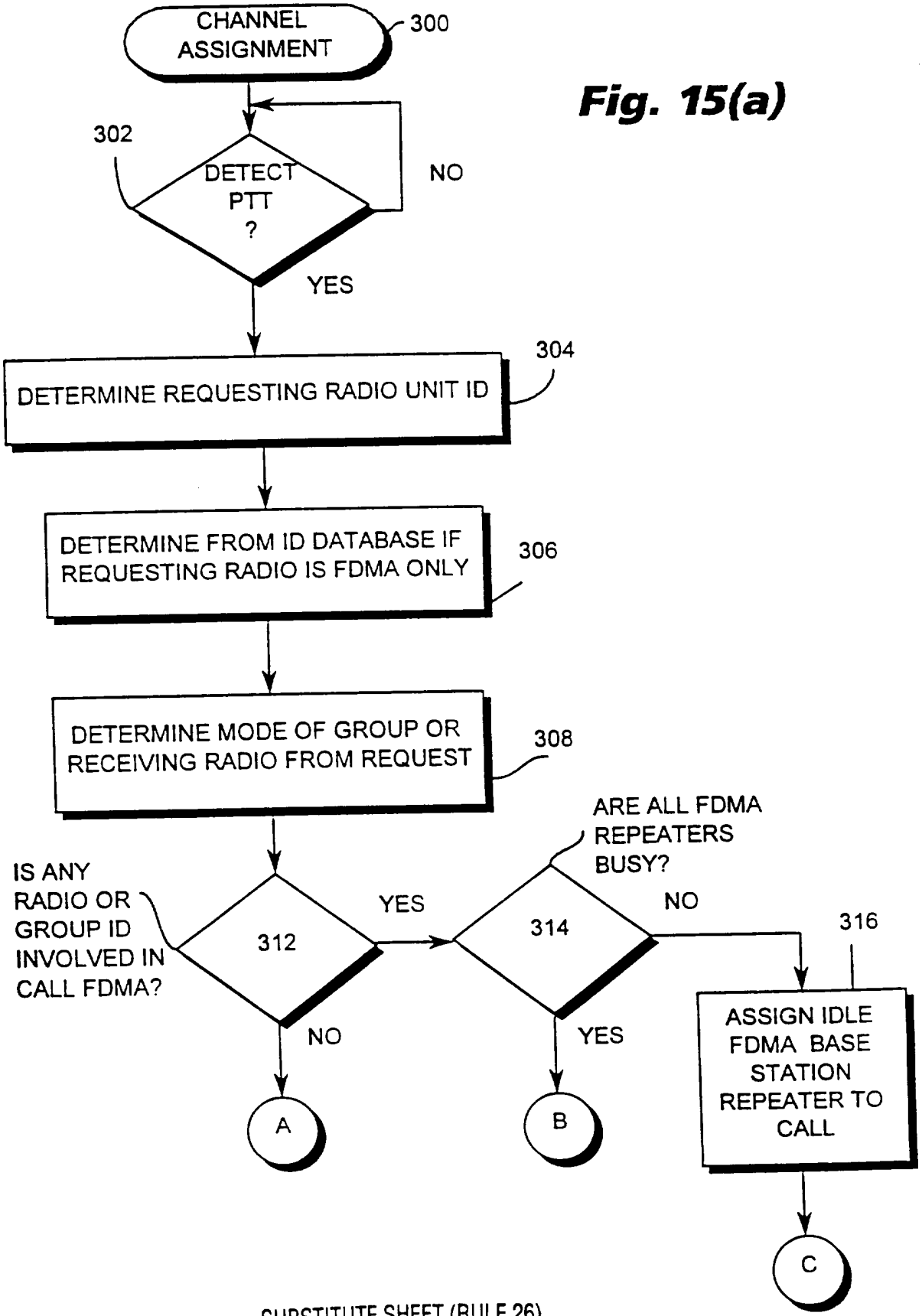
CHANNEL ASSIGNMENT
300
302
DETECT PTT ?
NO
YES
304
DETERMINE REQUESTING RADIO UNIT ID
DETERMINE FROM ID DATABASE IF REQUESTING RADIO IS FDMA ONLY
306
DETERMINE MODE OF GROUP OR RECEIVING RADIO FROM REQUEST
308
IS ANY RADIO OR GROUP ID INVOLVED IN CALL FDMA?
312
YES
NO
ARE ALL FDMA REPEATERS BUSY?
314
NO
YES
316
ASSIGN IDLE FDMA BASE STATION REPEATER TO CALL
A
B
C

Fig. 15(a)

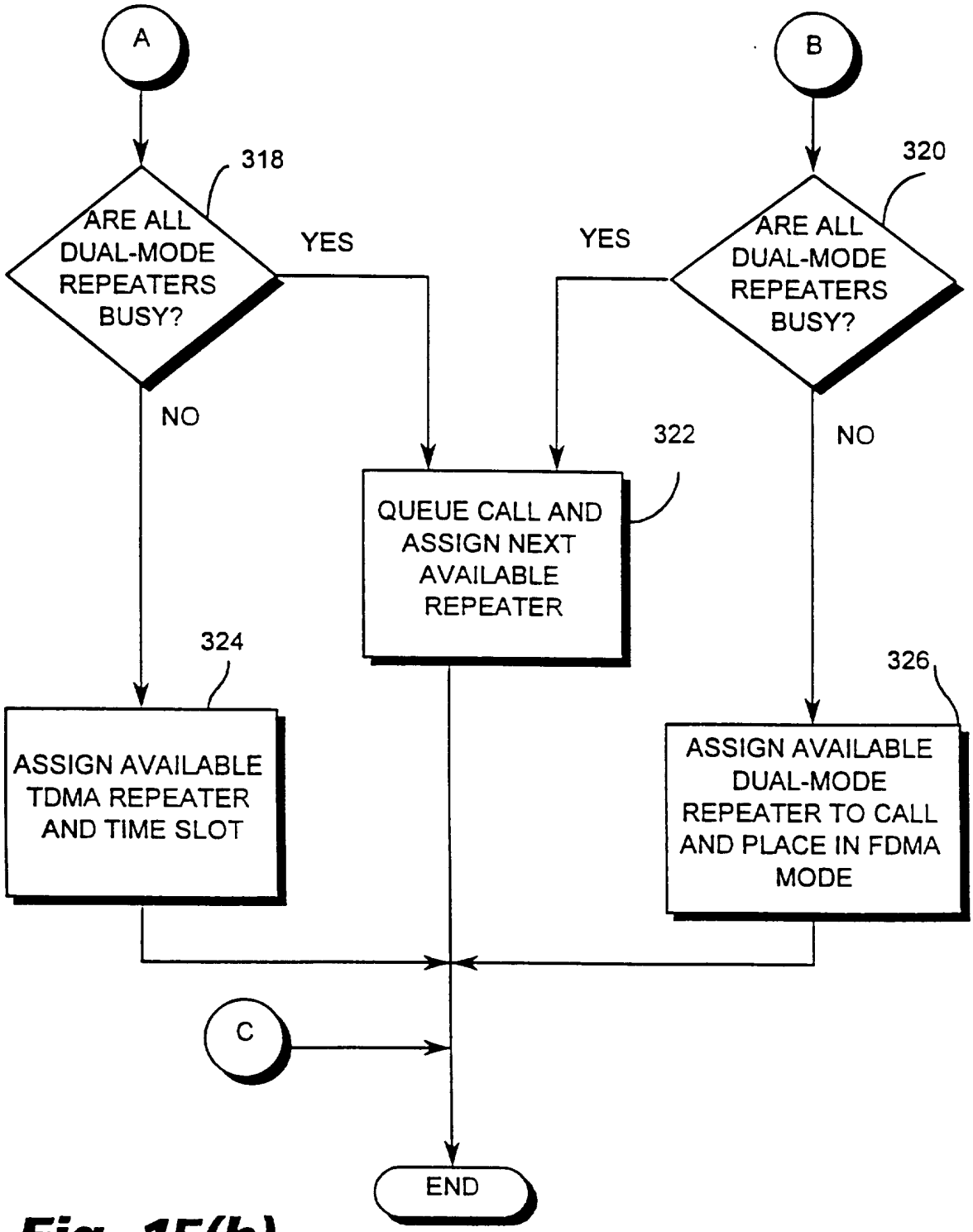
A
B
318
320
ARE ALL DUAL-MODE REPEATERS BUSY?
YES
YES
ARE ALL DUAL-MODE REPEATERS BUSY?
NO
NO
322
QUEUE CALL AND ASSIGN NEXT AVAILABLE REPEATER
324
326
ASSIGN AVAILABLE TDMA REPEATER AND TIME SLOT
ASSIGN AVAILABLE DUAL-MODE REPEATER TO CALL AND PLACE IN FDMA MODE
C
END

Fig. 15(b)

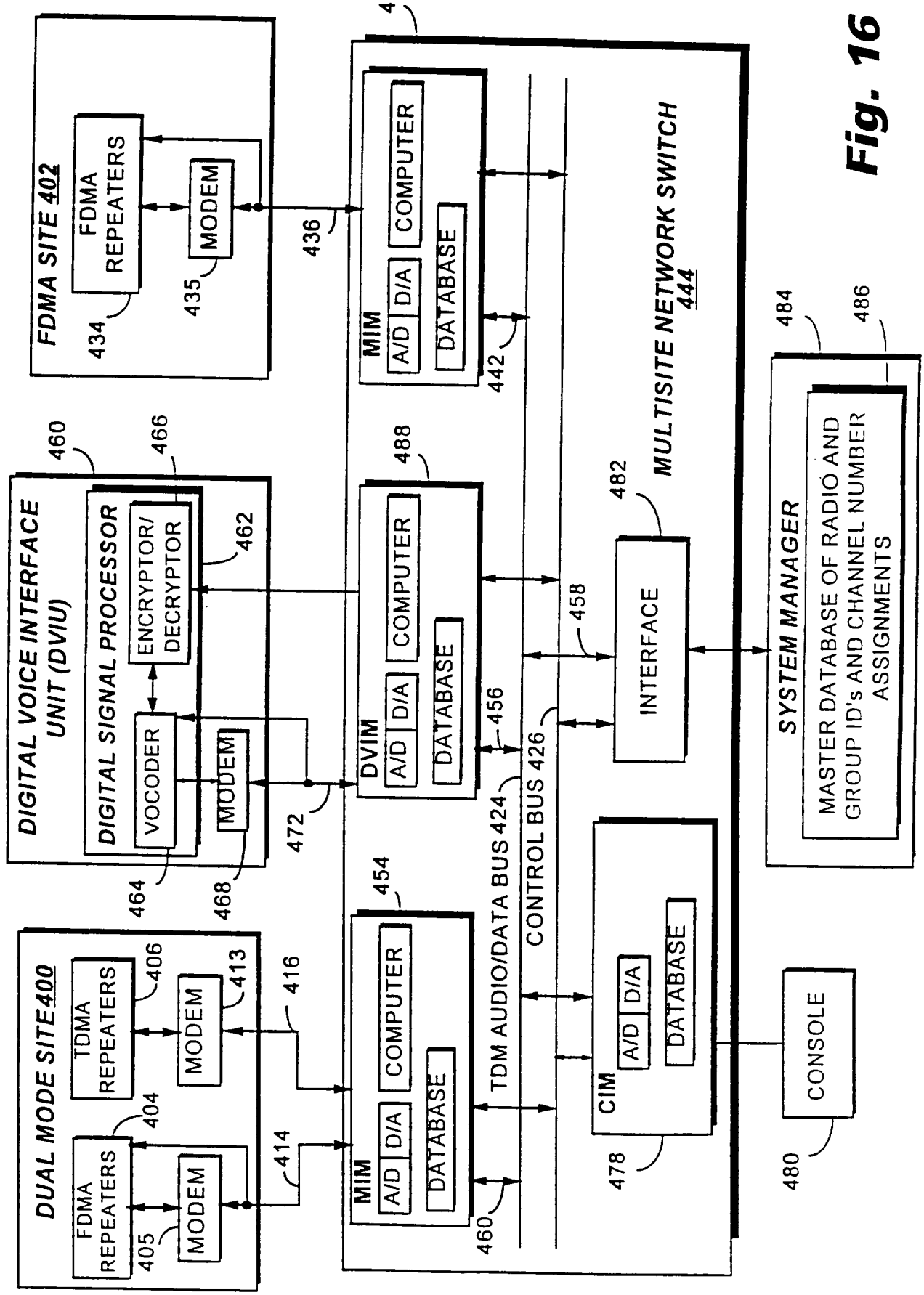
FDMA SITE 402
FDMA REPEATERS
MODEM
434
435
436
475
MIM
A/D
D/A
COMPUTER
DATABASE
442
MULTISITE NETWORK SWITCH 444
DIGITAL VOICE INTERFACE UNIT (DVIU)
460
DIGITAL SIGNAL PROCESSOR
466
ENCRYPTOR/ DECRYPTOR
462
VOCODER
MODEM
464
468
472
DVIM
488
456
458
482
INTERFACE
SYSTEM MANAGER
MASTER DATABASE OF RADIO AND GROUP ID's AND CHANNEL NUMBER ASSIGNMENTS
484
486
DUAL MODE SITE 400
TDMA REPEATERS
406
MODEM
413
416
404
414
405
454
TDM AUDIO/DATA BUS 424
CONTROL BUS 426
CIM
478
480
CONSOLE

Fig. 16

Fig. 17

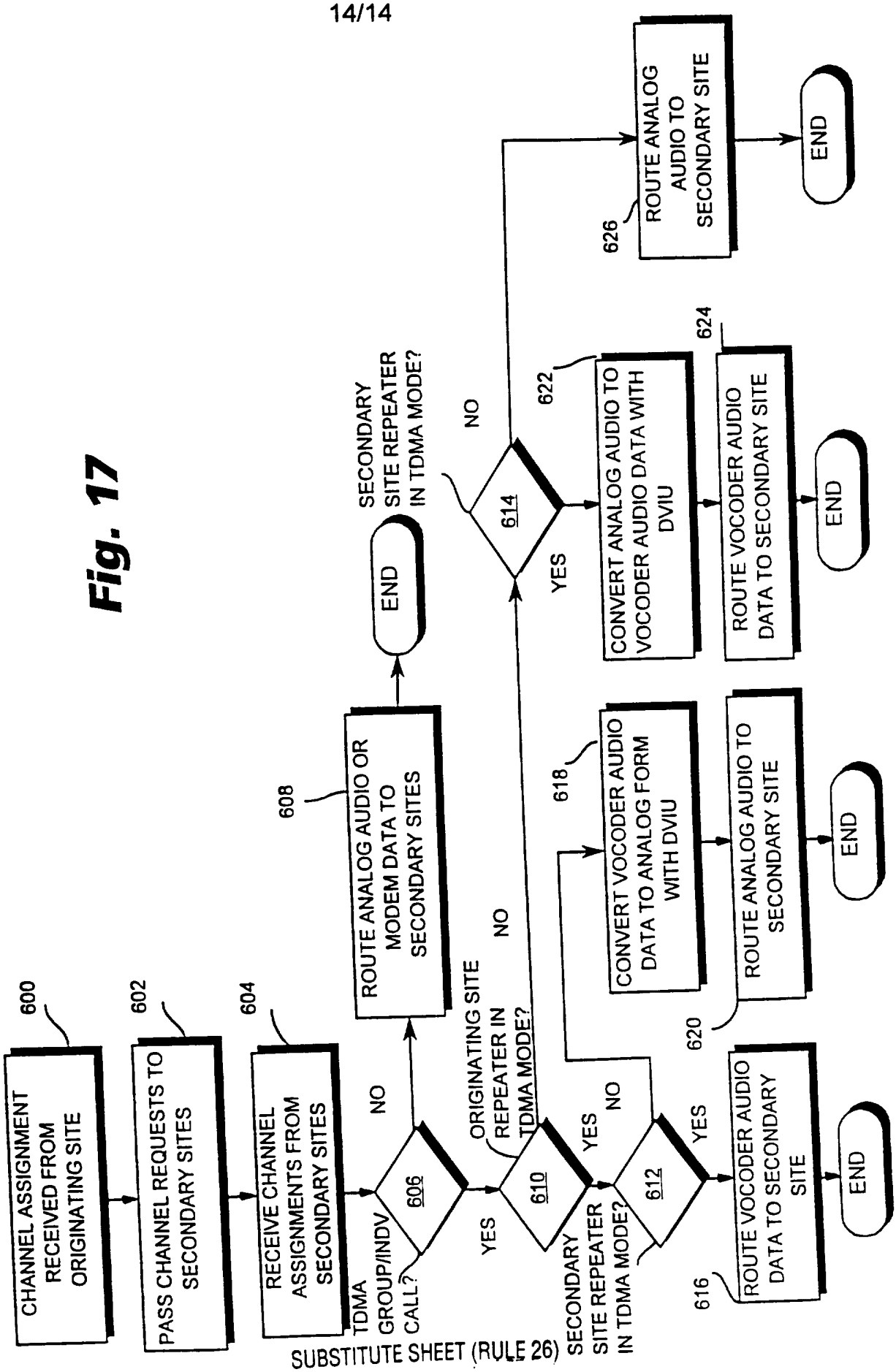
600
CHANNEL ASSIGNMENT RECEIVED FROM ORIGINATING SITE
602
PASS CHANNEL REQUESTS TO SECONDARY SITES
604
RECEIVE CHANNEL ASSIGNMENTS FROM SECONDARY SITES
606
TDMA GROUP/INDV CALL?
NO
YES
608
ROUTE ANALOG AUDIO OR MODEM DATA TO SECONDARY SITES
END
610
ORIGINATING SITE REPEATER IN TDMA MODE?
NO
YES
612
SECONDARY SITE REPEATER IN TDMA MODE?
NO
YES
614
SECONDARY SITE REPEATER IN TDMA MODE?
NO
YES
616
ROUTE VOCODER AUDIO DATA TO SECONDARY SITE
END
618
CONVERT VOCODER AUDIO DATA TO ANALOG FORM WITH DVIU
620
ROUTE ANALOG AUDIO TO SECONDARY SITE
END
622
CONVERT ANALOG AUDIO TO VOCODER AUDIO DATA WITH DVIU
624
ROUTE VOCODER AUDIO DATA TO SECONDARY SITE
END
626
ROUTE ANALOG AUDIO TO SECONDARY SITE
END